THIS DRAWING IS UNPUBLISHED. RELEASED FOR PUBLICATION 2014
© COPYRIGHT 2014 BY TE CONNECTIVITY ALL RIGHTS RESERVED.

REVISIONS

P	LTR	DESCRIPTION	DATE	DWN	APVD
	A	NEW RELEASE PER ECO-14-013595	09-05-14	DM	DM

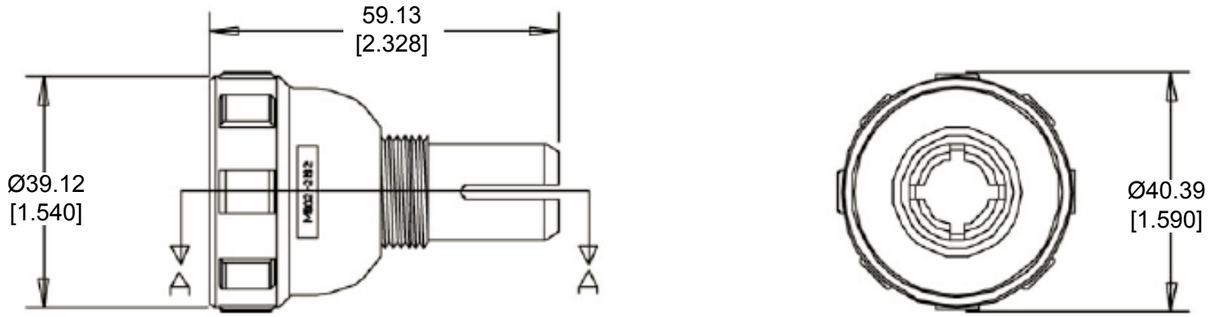

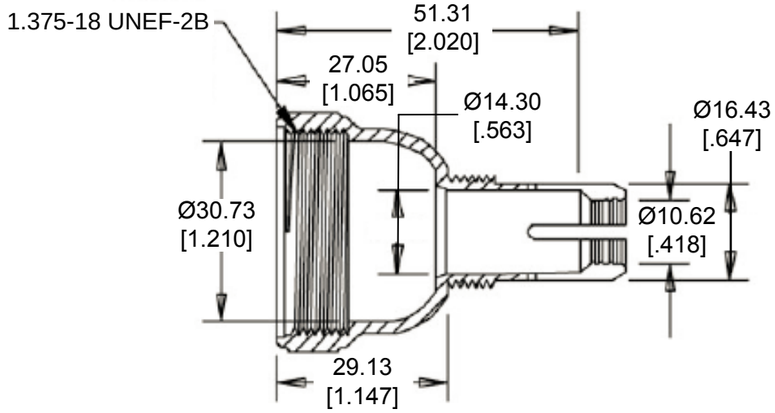

SECTION A-A

6. PART NO. M902-2192

5. CABLE STRIPPED LENGTH: 63.50 [2.500] MAX.

4. CABLE SIZE: Ø.300- Ø.430

3. TEMPERATURE RATING: -40°C TO +134°C [-40°F TO +273°F]

2. THIS PART IS USED WITH:
   COMPRESSION NUT, M902-2042

1. THIS PART IS USED ON
   HD1X-9-96X PLUG / RECEPTACLES
   HD1X-9-1939X PLUG / RECEPTACLES
   SEE INVIDUAL CUSTOMER DRAWINGS

THIS DRAWING IS A CONTROLLED DOCUMENT.

DIMENSIONS: MM [INCH]

TOLERANCES UNLESS OTHERWISE SPECIFIED:
0 PLC ±
1 PLC ±
2 PLC ± .63 [.025]
3 PLC ±
4 PLC ±
ANGLES ± 5°

MATERIAL: PC/PBT

FINISH: BLACK

DWN D. MEYER 05SEP2014
CHK I. GRANTCHAROVA 05SEP2014
APVD D. MEYER 05SEP2014
PRODUCT SPEC
APPLICATION SPEC
WEIGHT 13.98 g

Customer Drawing

TE Connectivity

NAME: BACKSHELL, SIZE 9
CABLE SIZE: Ø.300 - Ø.430
HD10 SERIES

SIZE	CAGE CODE	DRAWING NO	RESTRICTED TO
A3	4AFU8	C- M902-2192	-

SCALE NONE | SHEET 1 OF 1 | REV A

1470-19 (3/13)