DATE	REV	ECN	APP'D. BY
11-13-15	A15	10215	TRM
3-16-16	A16	10614	TRM

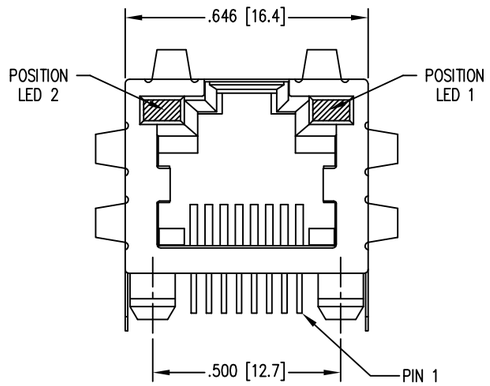

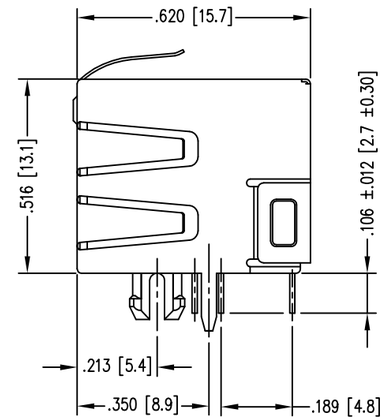

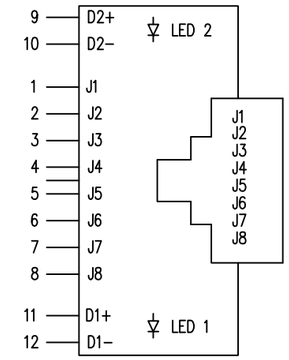

LED SPECIFICATIONS			
STANDARD LED	* FORWARD VOLTAGE (MAX)	* FORWARD VOLTAGE (TYP)	WAVELENGTH
GREEN DIFFUSED	2.6 V	2.25 V	565 nm
YELLOW DIFFUSED	2.5 V	2.1 V	590 nm
RED DIFFUSED	2.5 V	2.0 V	625 nm

* WITH A FORWARD CURRENT OF 20 mA

LED POLARITY
(ENLARGED VIEW)

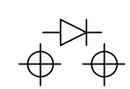

SINGLE COLOR LED

LED POLARITY
(ENLARGED VIEW)

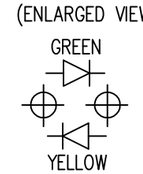

BI-COLOR LED

LED POLARITY
(ENLARGED VIEW)

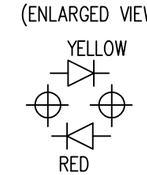

BI-COLOR LED

MATERIAL:
HOUSING: PBT+30%G.F. UL94V-0. STANDARD COLOR: BLACK
INSERT: PBT+30%G.F. UL94V-0. STANDARD COLOR: BLACK
LENS: PC UL94V-0. STANDARD COLOR: CLEAR
BACK: PBT+30%G.F. STANDARD COLOR: BLACK
LED 3.2 x 2.0 x 4.0 x P=2.29mm.
SHIELD: COPPER ALLOY 0.25mm THICKNESS.
CONTACT: 0.35mm (.014") THICKNESS, 50 MICRO INCH SELECTIVE GOLD PLATING OVER NICKEL PHOSPHOR BRONZE ALLOY.
FOR PRODUCT SPECIFICATION SEE PR022-01

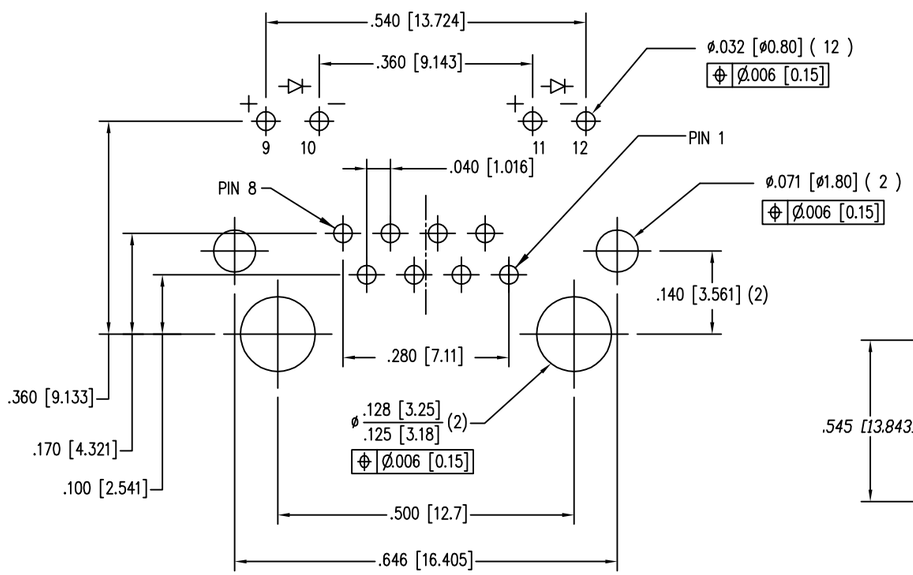

P.C.B. RECOMMENDED HOLE LAYOUT
SEEN FROM COMPONENT SIDE
TOLERANCE ±.003 [0.08] UNLESS OTHERWISE SPECIFIED

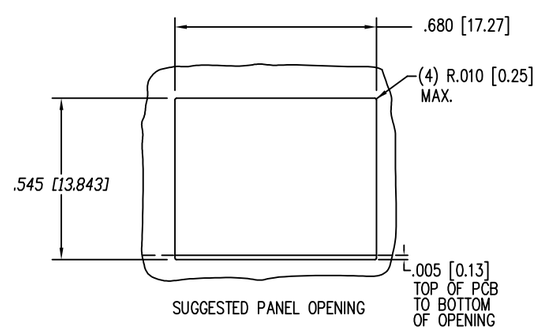

SUGGESTED PANEL OPENING

GREEN/YELLOW	GREEN/YELLOW	SS-74401-011
GREEN	RED	SS-74401-008
YELLOW	GREEN	SS-74401-001
POSITION 2	POSITION 1	PART NUMBER
INDICATOR COLOR		

RoHS

THIRD ANGLE PROJECTION

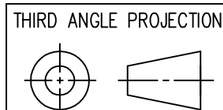

stewart CONNECTOR
a bel group

11118 Susquehanna Trail South
Glen Rock, PA 17327-9199
(717) 235-7512
http://www.stewartconnector.com

DO NOT SCALE DRAWING
DRAWING IS SUBJECT TO CHANGE WITHOUT NOTICE
DIMENSIONS: INCHES [METRIC]
UNLESS OTHERWISE SPECIFIED TOLERANCES ARE ±.005 [0.13] ANGLES ARE ± 1°
SHEET NO. 1 OF 1

TITLE: MODULAR JACKS, EMI-RFI ONE PIECE SHIELDED, ESD GROUND SINGLE PORT PCB, LED PAC

THIS DRAWING AND THE SUBJECT MATTER SHOWN THEREON ARE CONFIDENTIAL AND THE PROPRIETARY PROPERTY OF STEWART CONNECTOR AND SHALL NOT BE REPRODUCED, COPIED, OR USED IN ANY MANNER WITHOUT PRIOR WRITTEN CONSENT OF STEWART CONNECTOR. ONE OR MORE U.S. PATENTS MAY APPLY TO THIS PRODUCT. FOR DETAILS, PLEASE VISIT: HTTP://BELFUSE.COM/STEWART/STEWART_PATENTS/

DRN BY:	TRM	DATE	9-26-01
APPD BY:	RGC	DATE	9-26-01
DWG NO.	CT740080	REV.	A16

AutoCAD