THIS DRAWING IS UNPUBLISHED. RELEASED FOR PUBLICATION 20
© COPYRIGHT 20 - ALL RIGHTS RESERVED.

LOC	DIST
FT	0

REVISIONS

P	LTR	DESCRIPTION	DATE	DWN	APVD
	A1	REVISED PER ECO-11-007905	15APR2011	HMR	CR

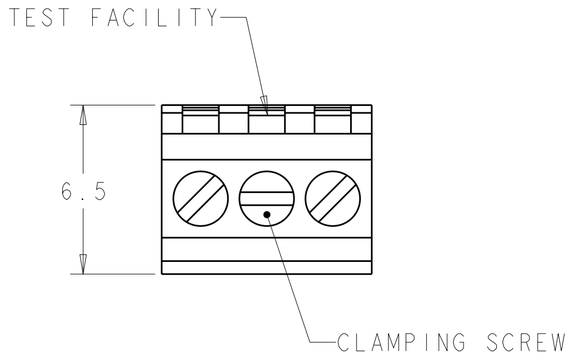

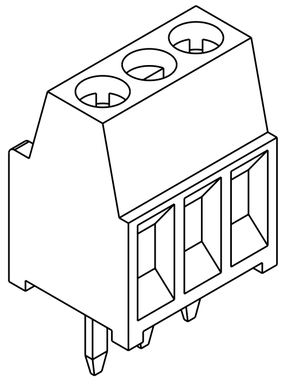

1546215-3 AS SHOWN

1. MATERIAL AND FINISH:
   HOUSING: PA 6-6, UL 94-V0, COLOR: GRAY.
   CLAMP: BRASS, NICKEL PLATED.
   TERMINAL: BRASS, TIN PLATED.
   CLAMPING SCREW: M1.6, STAINLESS STEEL.
2. SUITABLE FOR 1,6-2,4mm PC BOARD THICKNESS.
3. WIRE RANGE: 16-30 AWG.
4. RECOGNIZED UNDER THE COMPONENT PROGRAM OF UNDERWRITERS LABORATORIES INC. FILE N° E60677.
5. POSSIBILITY TO PUT TWO OR THREE TERMINAL BLOCKS SIDE BY SIDE BY INCREASING THE DIAMETER OF THE PCB HOLES TO MINIMUM 1,3mm.
6. TORQUE: 1.73 in-lbs MAX

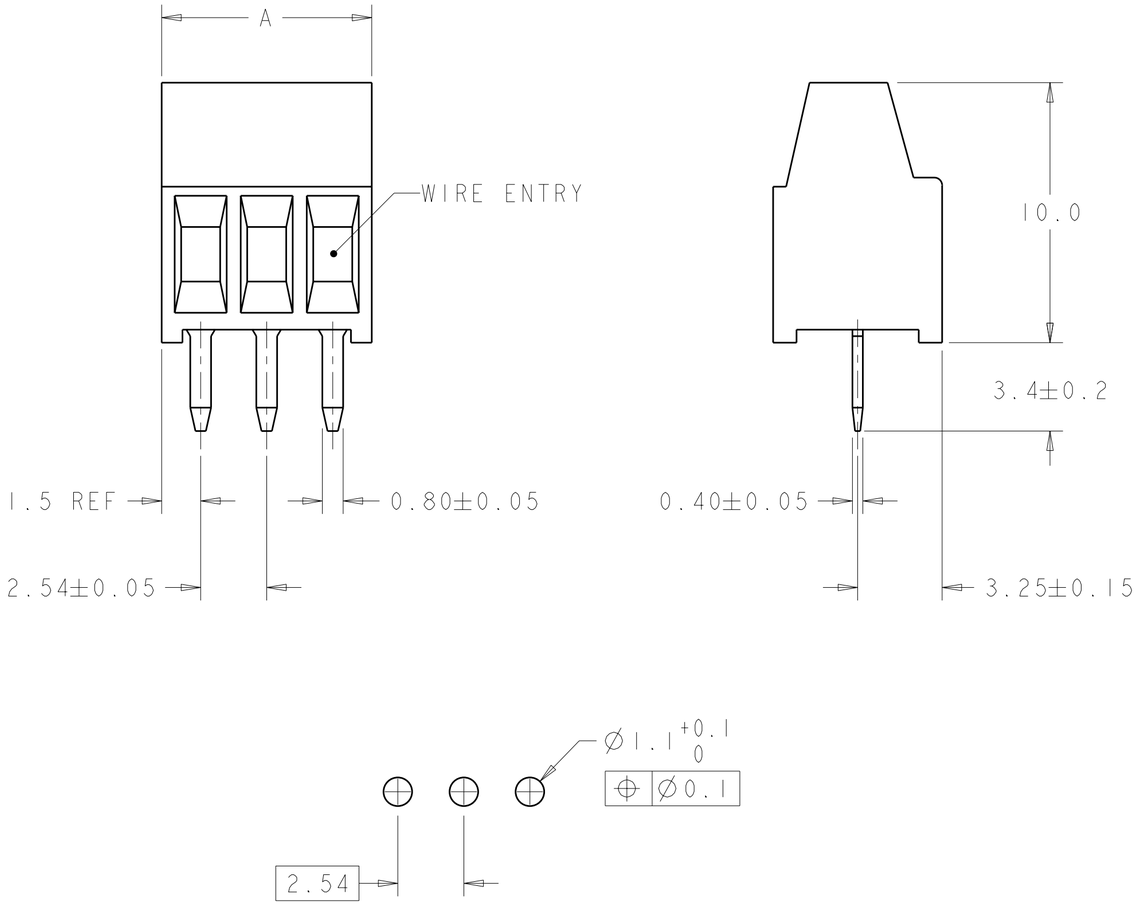

RECOMMENDED PC BOARD LAYOUT

A	NO OF POSN	PART NUMBER
30.94	12	1-1546215-2
28.40	11	1-1546215-1
25.86	10	1-1546215-0
23.32	9	1546215-9
20.78	8	1546215-8
18.24	7	1546215-7
15.70	6	1546215-6
13.16	5	1546215-5
10.62	4	1546215-4
8.08	3	1546215-3
5.54	2	1546215-2

THIS DRAWING IS A CONTROLLED DOCUMENT.

DIMENSIONS: mm

TOLERANCES UNLESS OTHERWISE SPECIFIED:
0 PLC ±-
1 PLC ±.3
2 PLC ±.25
3 PLC ±-
4 PLC ±-
ANGLES ±2

MATERIAL 1 -
FINISH 1 -

DWN S.WELDON 09MAR2004
CHK C.RICHARD 09MAR2004
APVD C.RICHARD 09MAR2004
PRODUCT SPEC 108-20166
APPLICATION SPEC 114-20079
WEIGHT -

TE Connectivity

NAME TERMINAL BLOCK ASSEMBLY, PCB MOUNT, SIDE WIRE ENTRY, STACKING, 2.54mm PITCH

SIZE	CAGE CODE	DRAWING NO	RESTRICTED TO
A2	00779	C-1546215	-

CUSTOMER DRAWING | SCALE 5:1 | SHEET 1 OF 1 | REV A1

1471-9 (3/11)

Pro/ENGINEER DRAWING