molex
one company › a world of innovation

This document was generated on 08/27/2015

PLEASE CHECK WWW.MOLEX.COM FOR LATEST PART INFORMATION

Part Number: 0039532185
Status: Active
Overview: FFC-FPC (Through-Hole)
Description: FFC/FPC Connector, Through-Hole, Vertical, ZIF, 18 Circuits

Documents:
3D Model
Drawing (PDF)
Product Specification PS-5597-004 (PDF)
Packaging Specification SPK-5597-001 (PDF)
RoHS Certificate of Compliance (PDF)

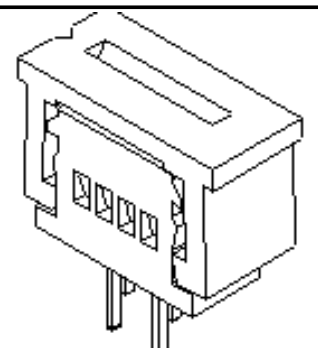

Series image - Reference only

Agency Certification	
UL	E29179
General	
Product Family	FFC/FPC Connectors
Series	5597
Overview	FFC-FPC (Through-Hole)
Product Name	N/A
UPC	822348190133
Physical	
Circuits (Loaded)	18
Color - Resin	Natural
Contact Position	N/A
Durability (mating cycles max)	30
Entry Angle	Vertical
Flammability	94V-0
Mated Height	7.50mm
Material - Metal	Phosphor Bronze
Material - Plating Mating	Tin-Bismuth
Material - Plating Termination	Tin-Bismuth
Material - Resin	Polyester
Net Weight	1612.620/mg
Number of Rows	1
Orientation	Vertical
PC Tail Length	3.50mm
PCB Locator	No
PCB Retention	None
Packaging Type	Tray
Pitch - Mating Interface	1.25mm
Plating min - Mating	1.016µm
Plating min - Termination	1.016µm
Polarized to PCB	No
Stackable	No
Surface Mount Compatible (SMC)	No
Temperature Range - Operating	-20°C to +80°C
Termination Interface: Style	Through Hole
Wire/Cable Type	FFC/FPC
Electrical	
Current - Maximum per Contact	1.0A
Voltage - Maximum	200V
Material Info	
Old Part Number	5597-18CPB7F
Reference - Drawing Numbers	
Packaging Specification	SPK-5597-001

EU ELV
Not Relevant

EU RoHS
Compliant

China RoHS

REACH SVHC
Contains SVHC(2015 June 15): No

Halogen-Free Status
Not Low-Halogen

Need more information on product environmental compliance?

Email productcompliance@molex.com
Please visit the Contact Us section for any non-product compliance questions.

China ROHS	Green Image
ELV	Not Relevant

Search Parts in this Series
5597 Series

Product Specification	PS-5597-004, RPS-5597-005, RPS-5597-006, RPS-5597-013, RPS-5597-014, RPS-5597-015, RPS-5597-016
Sales Drawing	SD-5597-007

This document was generated on 08/27/2015

PLEASE CHECK WWW.MOLEX.COM FOR LATEST PART INFORMATION