REVISION					
ZONE	LTR	ECN	DESCRIPTION	DATE	APPROVED
	A	33634	NEW RELEASE	8/20/91	
	B	38154	DESCRIPTION WAS: MCK-N1-P-9LST2	8/20/98	MC
	B1	43636	UPDATE NOTES 1 & 3.	2/28/8	TL
	C		UPDATE PER ECO-10-017486	8/25/10	PJS

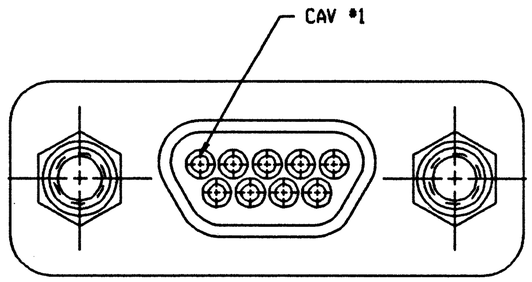

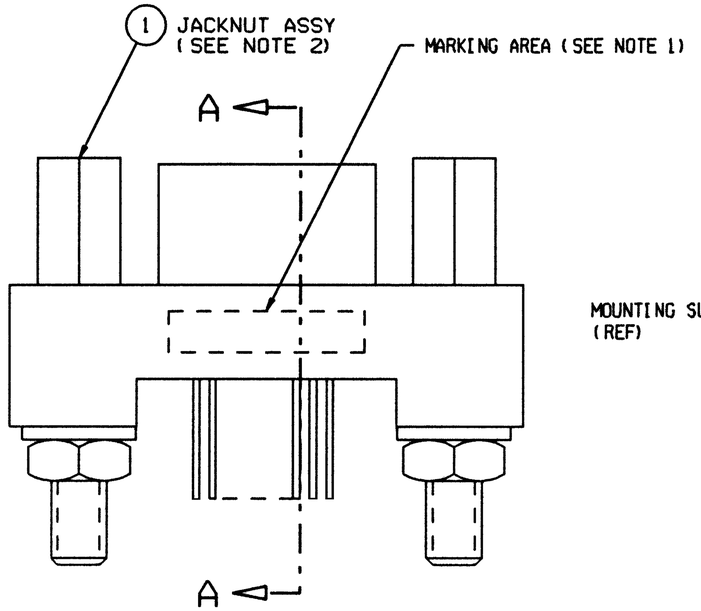

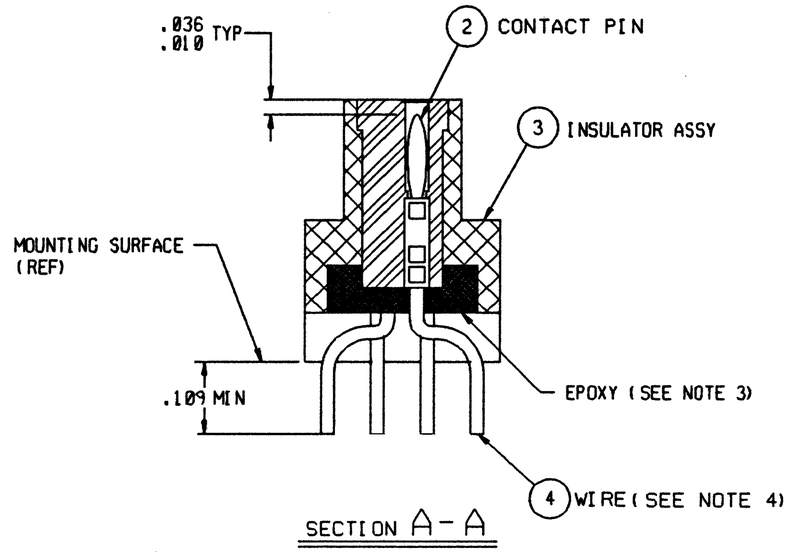

SECTION A-A

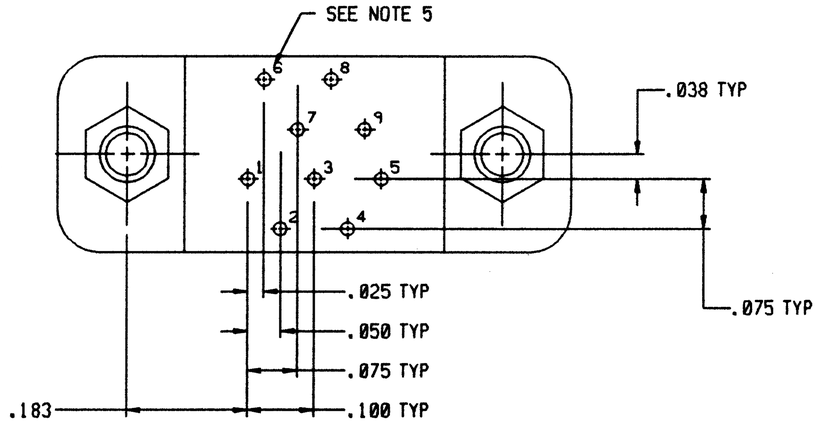

NOTES: UNLESS OTHERWISE SPECIFIED

1. MARK PER TPD.
2. ITEM 1, JACKNUT ASSEMBLIES AS SHOWN ARE ASSEMBLED ON FLANGE.
3. EPOXY AS SHOWN. WICKING PERMITTED BEYOND POTTING WELL.
4. TERMINAL WIRES ARE TO BE SOLDER DIPPED UP TO MOUNTING SURFACE (MINIMUM).
5. LEAD IDENTIFICATION AS SHOWN ARE REFERENCE ONLY. DO NOT APPEAR ON THE PART.
6. CRIMP LEADS INTO CONTACTS PER MEP302-05.

UNLESS OTHERWISE SPECIFIED DIMENSIONS ARE IN INCHES. TOLERANCE ARE:

FRACTIONS	DECIMALS	ANGLES
± 1/8	.XX ± .01 .XXX ± .005	± 2°

MATERIAL:

FINISH:

APPROVALS	SIGNATURE	DATE
DRAWN		8/20/91
CHECKED		
PRO. ENG		
APPROVED		

THIS DOCUMENT IS THE PROPERTY OF MALCO, A MICRODOT CO. USE OF THIS DOCUMENT OR ANY PART OF THEREOF IS STRICTLY FORBIDDEN WITHOUT THE EXPRESS WRITTEN PERMISSION OF MALCO, A MICRODOT COMPANY.

MALCO
A MICRODOT COMPANY, INC.
306 PASADENA AVE., SO. PASADENA, CA 91030

METAL SHELL 'D' CONNECTOR, PLUG
MCK-**-P-9PST2
180 DEGREE WITHOUT T.B. BLOCK
094-5104-7003

PROD CODE 845

CODE M

SIZE	CODE IDENT NO.	DRAWING NO.
A	98278	1-1532142-2

SCALE: NONE

SHEET 1 OF 1