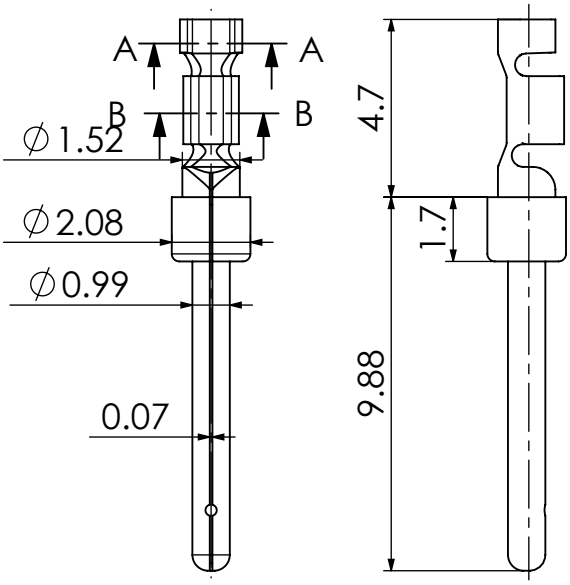

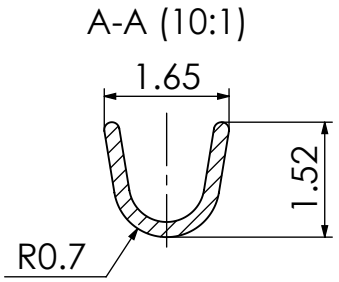

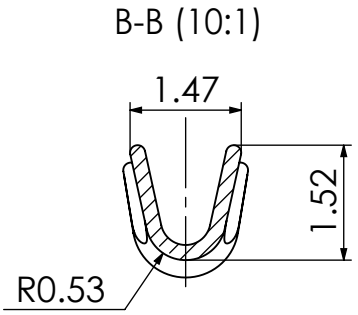

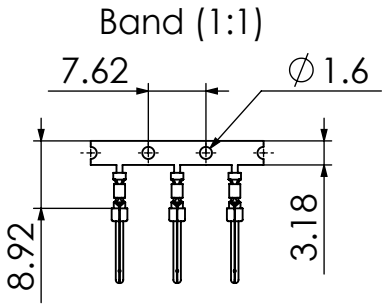

Wire Size	Surface (Material)	Part No.	Packing Unit
26-28 AWG ②	0,1µm Au over Ni (Copper alloy)	P7L26	10 strips of 25 pieces in a box
		P7LR26	10.000 pieces on a reel
		P7LR26-V2	10.000 pieces on a reel / Entry from left side with turn round
		P7LR26-V3	10.000 pieces on a reel / Entry from left side
	0,8µm Au over Ni (Copper alloy)	P7L26-K176	10 strips of 25 pieces in a box
		P7LR26-K176	10.000 pieces on a reel
		P7LR26-K176V2	10.000 pieces on a reel / Entry from left side with turn round
		P7LR26-K176V3	10.000 pieces on a reel / Entry from left side
		P7LSR26-K176	350 pieces on a reel
	1,2µm Au over Ni (Copper alloy)	P7LR26-K1592	10.000 pieces on a reel
		P7LR26-K1592V2	10.000 pieces on a reel / Entry from left side with turn round
		P7LR26-K1592V3	10.000 pieces on a reel / Entry from left side

REV.	DATE	CH.-NO.
2	20-12-2010	22788
1	25-01-2008	22194

Measurement without tolerance occ. to ISO 2768-m

SCALE 5:1

	NAME / DATE
DRAWN	ADenzinger 24-01-2008
CHECKED	MTeubel 21-12-2010

TITLE

Crimp contacts, stamped for wire size 26-28AWG ②

FCT group
fctgroup.com

DWG.NO. P7L26_D

REV. 2

ORIGINAL: DIN A4-DRAWING AS A FILE

REPLACEMENT FOR: P7L26_D a

PAGES 1

COMMENT:
ALL RIGHTS ARE RESERVED BY US FOR THIS DRAWING, WITHOUT OUR PRIOR CONSENT,
IT MAY NEITHER BE DUBLICATED NOR MADE AVAILABLE TO A THIRD PARTY,
AND IT ALSO MAY NOT BE IMPROPERLY USED BY TE RECEIVER, OR A THIRD PARTY.