C. Westerby 5-21-92	5
APPROVED BY/DATE	REV

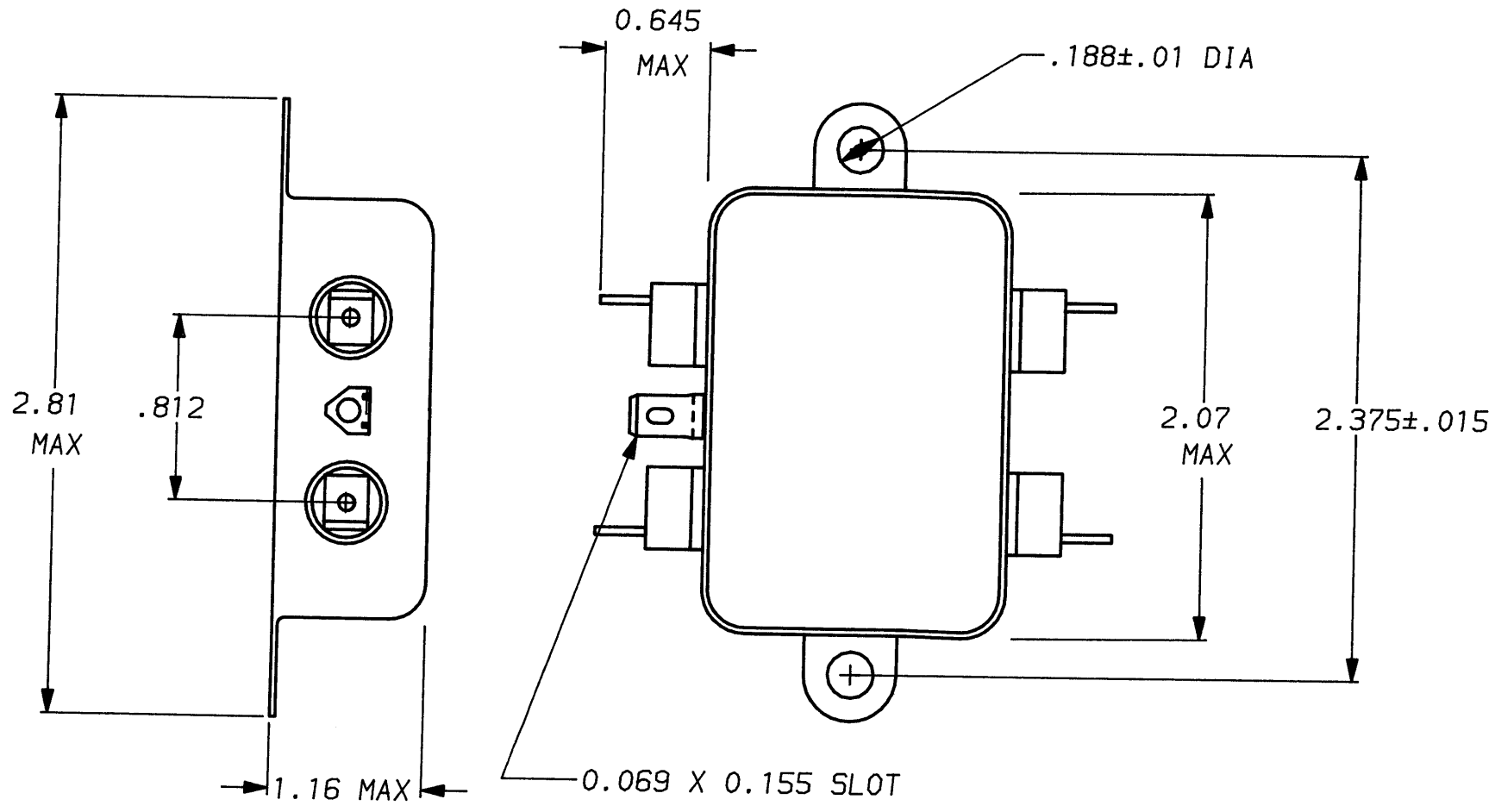

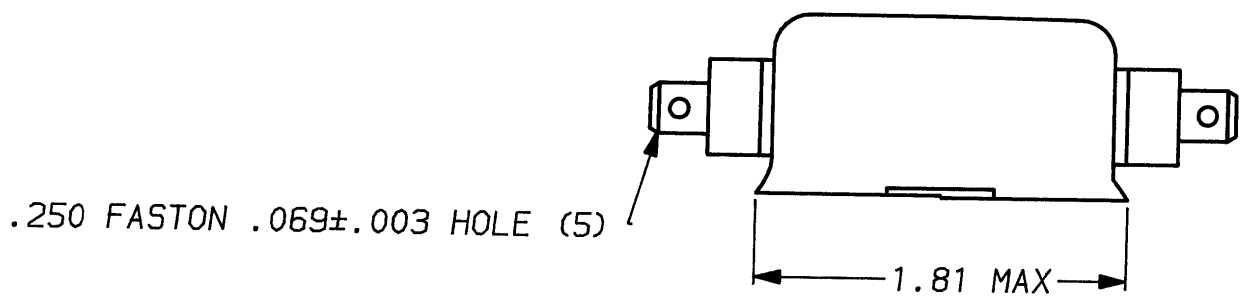

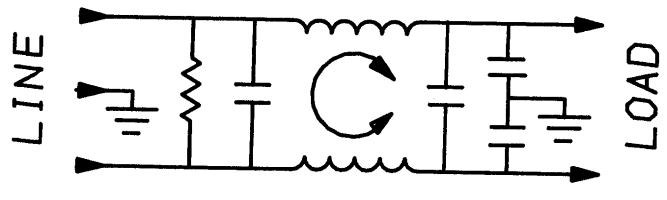

SAFETY ORGANIZATION(S):

THIS FILTER HAS BEEN FORMALLY RECOGNIZED, CERTIFIED OR APPROVED BY THE LISTED AGENCY. THEREFORE, ALL TEST/REQUIREMENTS SPECIFIED IN THE LATEST REVISION OF THE FOLLOWING AGENCY STANDARDS HAVE BEEN MET:

UL RECOGNIZED	UL 1283
CSA CERTIFIED	CSA 22.2, NO.0,0.4,8
VDE APPROVED	VDE 565-3

OPERATING SPECIFICATIONS:

LINE VOLTAGE/CURRENT:	5 AMP., 120/250 VAC 5 AMP./40°C, 250 VAC
LINE FREQUENCY:	50-60Hz
MAX. CASE RISE @ RATED CURRENT:	30°C
MAX. LEAKAGE CURRENT, EACH LINE TO GROUND	.5 mA at 120V 60 Hz 1.0 mA at 250V 50 Hz
OPERATING AMBIENT TEMP. RANGE:	-10°C TO +40°C @ RATED CURRENT, I_r

IN AN AMBIENT, T_a, HIGHER THAN 40°C, THE MAXIMUM OPERATING CURRENT, I_o, IS AS FOLLOWS:

$$I_o = I_r \sqrt{\frac{85-T_a}{45}}$$

RELIABILITY SPECIFICATIONS:

STORAGE TEMPERATURE:	-40°C TO +85°C
HUMIDITY:	21 DAYS @ 40°C 95% RH
CURRENT OVERLOAD TEST:	6 TIMES RATED CURRENT FOR 8 SECONDS

TEST SPECIFICATIONS:

INDUCTANCE:	.516 mH NOMINAL
CAPACITANCE: (MEASURED @ 1 KHz, 0.25 VAC MAX., 25°C ±1°C)	
LINE TO GROUND:	.011µF ±20%
LINE TO LINE:	.203µF ±20%
DISCHARGE RESISTOR	1.5MΩ
LINE/GROUND AND LINE/LINE INSULATION RESISTANCE	6000 MΩ (MIN) AT 100 VDC 20°C AND 50% RH

RECOMMENDED RECEIVING INSPECTION HIPOT:

LINES TO GROUND:	2250 VDC FOR 1 MINUTE
LINE TO LINE:	1450 VDC FOR 1 MINUTE

FILTER APPROVAL:

THE BEST WAY TO SELECT AND QUALIFY A FILTER IS FOR YOUR ENGINEERING TO TEST THE UNIT IN YOUR EQUIPMENT.

50Ω - 50Ω (MINIMUM) INSERTION LOSS

FREQUENCY MHz	.15	.5	1	2	5	10	20	30				
COMMON dB	10	25	32	37	46	50	52	53				
DIFF. dB	5	5	40	60	63	60	50	50				

TOLERANCE EXCEPT AS NOTED
DECIMAL: .XXX .XX .X ANGLES
ENGLISH: ±.025 ± 1°
METRIC: ± —

MATERIAL: AS SUPPLIED

FINISH: AS SUPPLIED

corcom
LIBERTYVILLE, IL 60048

POWER LINE FILTER

SCALE	DATE	DRG. NO.	REV.
NTS	7-31-90	5VK1.	05
DRW. BY CFW	ORIGINATOR CFW		

This document is proprietary to CORCOM INC. and is not to be reproduced nor used for manufacturing purposes except on CORCOM's order or prior written consent.