THIS DRAWING IS UNPUBLISHED. RELEASED FOR PUBLICATION 20
© COPYRIGHT 20 BY - ALL RIGHTS RESERVED.

REVISIONS

P	LTR	DESCRIPTION	DATE	DWN	APVD
	P	ECO-13-012991	14AUG2013	JM	TE

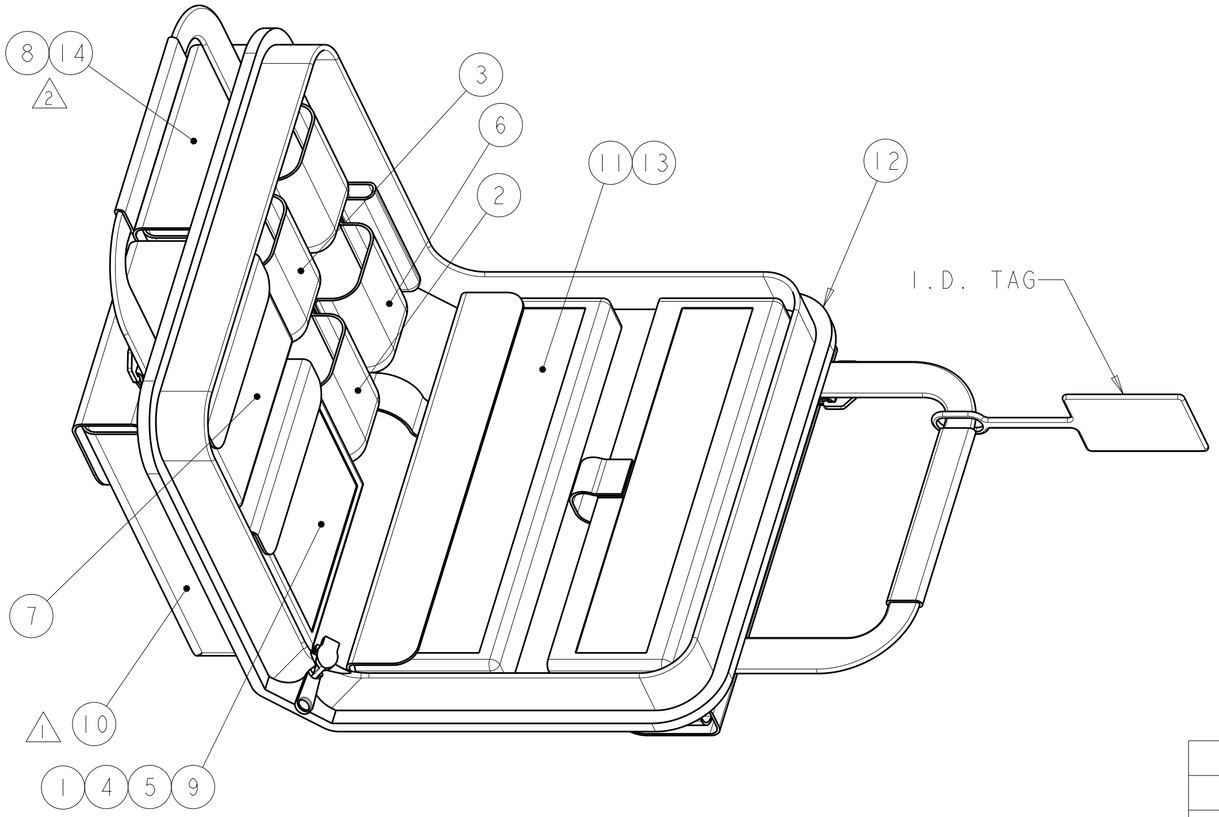

1 OPTIONAL SHOULDER STRAP.

2 TE INSTRUCTION SHEETS AND MANUFACTURER'S INSTRUCTION SHEETS.

-2	-1	PART NUMBER	DESCRIPTION	ITEM NO.
1	1	2064710-1	FIBER OPTICS CLEANING & INSPECTION GUIDE	14
1	-	1754768-1	MICROSCOPE ADAPTER, MT-RJ	13
1	1	1278540-1	PREMIUM SOFTCASE	12
1	-	1754767-1	200x MICROSCOPE	11
1	1	1871696-1	FIBER CLEAVER, SLIDE CUTTER	10
1	1	1457999-1	BALL END HEX KEY (5)	9
1	1	1374503-1	CD ROM, TERMINATION TRAINING	8
10	10	501857-2	ALCOHOL WIPES	7
1	1	1754708-1	FIBER STRIP TOOL	6
1	1	501198-1	JACKET STRIPPER	5
1	1	1278598-1	STRIP TEMPLATE, MT-RJ JACK	4
1	1	492109-2	STRIPPER, MICRO STRIP	3
1	1	1278637-1	ARAMID YARN SHEARS	2
25	25	1278576-1	ACTUATION KEY	1

THIS DRAWING IS A CONTROLLED DOCUMENT.

DIMENSIONS: mm

TOLERANCES UNLESS OTHERWISE SPECIFIED:
0 PLC ±-
1 PLC ±-
2 PLC ±-
3 PLC ±-
4 PLC ±-
ANGLES ±-

MATERIAL - -
FINISH - -

DWN B. BRIGGS 16MAY2006
CHK D. KIRSCH 16MAY2006
APVD S. BUCHTER 16MAY2006
PRODUCT SPEC -
APPLICATION SPEC -
WEIGHT -

TE Connectivity

NAME TERMINATION KIT, MT-RJ JACK MODULE -

SIZE	CAGE CODE	DRAWING NO	RESTRICTED TO
A2	00779	C-1278346	-

CUSTOMER DRAWING SCALE NTS SHEET 1 OF 1 REV P

1471-9 (3/13)