SIGN	DATE	DESCRIPTION	APPROVER
1	2010.12.08	Added "cULus" standard	Chen Bo
2	2012.02.23	Flange nut is changed	Aaron
3	2012.02.23	The dimension is added	Aaron
4	2012.02.23	The material is changed from Brass to Copper	Aaron
5	2014.06.05	change the dimension from A1.70 to 1.00	Ji long
6	2014.11.13	update drawing	Evan

THIS IS CAD DRAWING, DO NOT REVISE MANUALLY!!!

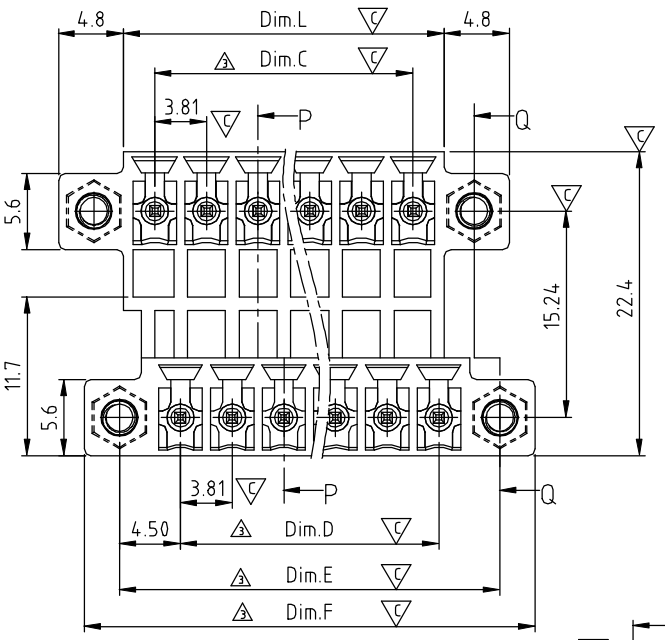

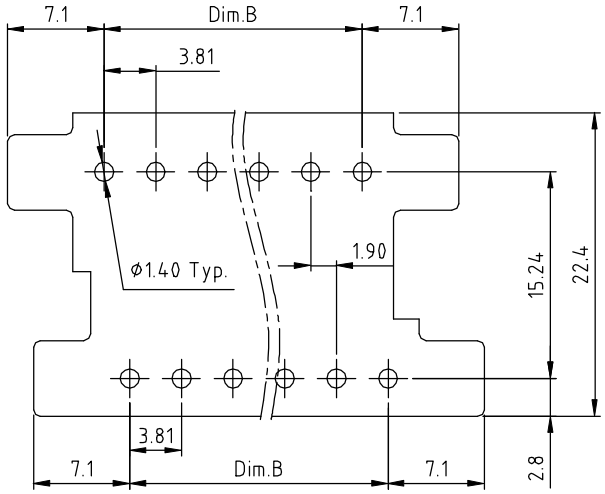

RECOMMENDED PCB LAYOUT
TOP VIEW

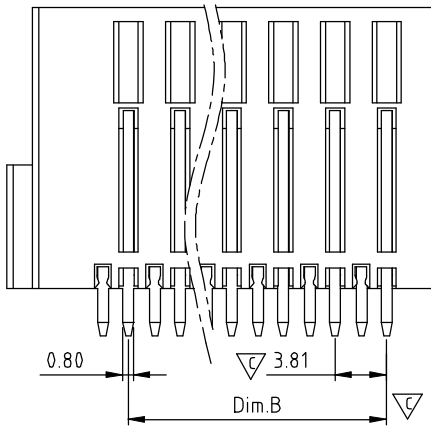

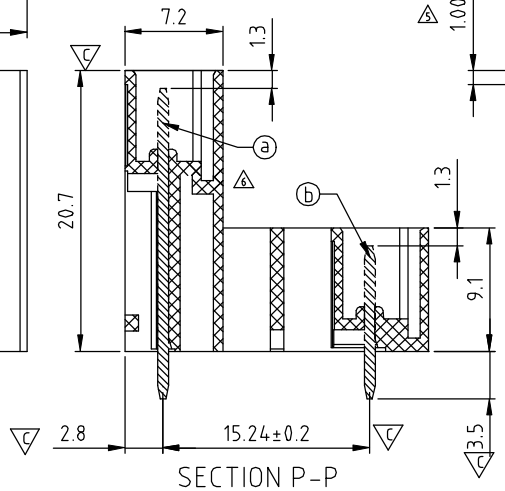

SECTION P-P

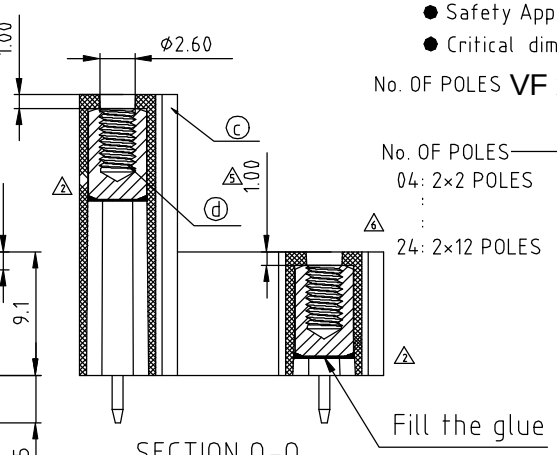

SECTION Q-Q

Material

- Item ⓐ Long contact pin: Copper ,Tin plated
- Item ⓑ Short contact pin: Copper ,Tin plated
- Item ⓒ Terminal (housing): Thermoplastic (UL94V-0)
- Item ⓓ With flange nut: Brass ,M2.5

Electrical

- Voltage rating: 300VAC
- Current rating: 10A
- Withstanding Voltage: 1.6KV
- Operating temperature: -40°C to +115°C
- Soldering temperature: 260°C±5°C/5 Sec
- Safety Approval: cULus
- Critical dimension: ▽

No. OF POLES **VF xx 3 2 x 0 xxxx G**

- No. OF POLES
  - 04: 2×2 POLES
  - ⋮
  - 24: 2×12 POLES
- Color
  - 0 Black (RAL9005)
  - 2 Red (RAL3001/D)
  - 3 Orange(RAL2011/P)
  - 4 Yellow(RAL1018/A)
  - 5 Green(RAL6018/T)
  - 6 Blue (RAL5015/A)
  - 8 Grey(RAL7035/D)
  - 9 White(RAL1102)
  - C Green(RAL6018/U)
- 0000: "@" Logo (Standard)
- 000A: "ANYTEK" Mark
- Any special item by customer requst. please contact sales department.
- RoHS compliant (lead<4%) In copper Alloy

Dimension

Dim.L	(N/2)x3.81+0.79
Dim.B	(N/2-1) x 3.81
Dim.C	(N/2-1) x 3.81
Dim.D	(N/2-1) x 3.81
Dim.E	((N/2)+1)x3.81+1.38
Dim.F	(N/2+2)x3.81+2.77

N= number of poles

Poles	Tolerance
2×2P-2×5P	±0.15
2×6P-2×10P	±0.20
2×11P-2×12P	±0.25

ANYTEK

CUSTOMER COPY

ALL RIGHTS RESERVED. REPRODUCTION OR ISSUE TO THIRD PARTIES IN ANY FORM WHATEVER IS NOT PERMITTED WITHOUT WRITTEN AUTHORITY FROM THE PROPRIETOR. PROPERTY OF ANYTEK TECHNOLOGY CO., LTD

TITLE	VF-3.81 Series 2×2P-2×16P Vertical With flange				
PART NO.	VFxx32x0xxxxG			DWG NO.	8VF0204
APPROVED	CHECKED	DESIGNED	DRAWN	CUST NO.	
		Evan 11/13`14	Evan 11/13`14	UNIT: mm	
				SCALE: NONE	
				SHEET: 01/01	REV.: F

Tolerance	
X.	±0.50
X.X	±0.30
X.XX	±0.10
X°	±1°