PART NUMBER	ENGINEERING NUMBER	FINISH LENGTH
1300660035	1R3000A28M005G	1.64' [0.5M]
1300660036	1R3000A28M010G	3.28' [1M]
1300660037	1R3000A28M015G	4.92' [1.5M]

PART NUMBER LEGEND

1R3000A28M005G

FINISHED LENGTH:
M005= 0.5 METER
M010= 1 METER
M100= 10 METER

CABLE LENGTH TOLERANCES
>.3M [1FT]: +19mm-0 [+.75in-0]
.3 - .9M [1 - 3FT]: +44.5mm-0 [+1.75in-0]
.9 - 1.8M [3 - 6FT]: +55.6mm-0 [+2.19in-0]
1.8 - 3.7M [6 - 12FT: +88.9mm-0 [+3.50in-0]
3.7 - 7.3M [12 - 24FT]: +165.1mm-0 [+6.50in-0]
7.3-14.6M [24 - 48FT]: +317.5mm-0 [+12.50in-0]
14.6 - 30.5M [48-100FT]: +622.3mm-0 [+24.50in-0]
OVER 30M [100FT] +2% OF FINISHED LENGTH

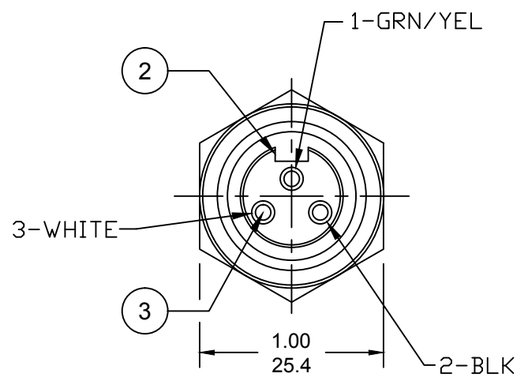

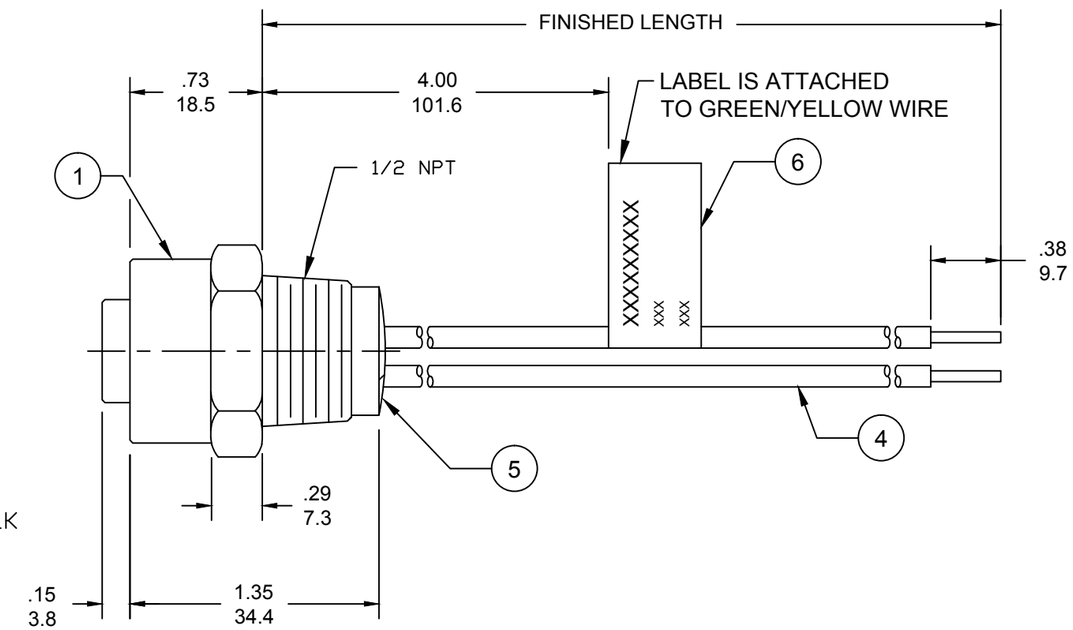

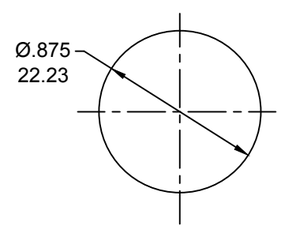

REF. KNOCKOUT HOLE

NOTES:
1. MATERIAL: AS NOTED
2. FINISH: AS NOTED
3. ELECTRICAL:
   VOLTAGE: 500V PER IEC60664
   600V PER UL2237
   CURRENT: 15A
4. TEMP RATING: -20°TO +90°C
5. PROTECTION: IP67 (WHEN MATED)
6. COUPLING THREAD: 7/8-16UN
7. UL LISTED FILE: E258922
8. ALL DIMS ARE FOR REFERENCE UNLESS NOTED OTHERWISE

ITEM	DESCRIPTION	MATERIAL	FINISH
6	FLAG LABEL	VINYL	BLACK/YELLOW
5	POTTING MATERIAL	EPOXY	BLACK
4	WIRE, 14 AWG, UL 1015 (B)	PVC INSULATION	SEE FACE VIEW
3	CONTACT SOCKET	COPPER ALLOY	GOLD PLATED
2	FEMALE INSERT	PVC	BLACK
1	RECEPTACLE SHELL	ZINC DIE-CAST	NICKEL PLATE

REV	DESCRIPTION
B	UL 1015 WAS THHN EC NO: IPG2019-0320 DRWN: JCAPPOZZ 2019/01/02 CH'KD: RSTONE 2019/01/02 APPR: BWOODMAN 2017/01/26

QUALITY SYMBOLS
▼=0
(C)=0

GENERAL TOLERANCES (UNLESS SPECIFIED)

	mm	INCH
4 PLACES	±---	±---
3 PLACES	±---	±---
2 PLACES	±---	±---
1 PLACE	±---	±---
ANGULAR ±---°		

DRAFT WHERE APPLICABLE MUST REMAIN WITHIN DIMENSIONS

DIMENSION STYLE: INCH/MM
SCALE: ---
DESIGN UNITS: INCH
THIRD ANGLE PROJECTION

DRAWN BY: RSTONE DATE: 2017/01/11
CHECKED BY: M ZIELIN DATE: 2017/01/26
APPROVED BY: BWOODMAN DATE: 2017/01/26

TITLE: MINI-CHANGE RECEPTACLE FEMALE 3P, 14 AWG 1/2 NPT, AC COLOR

molex MOLEX INCORPORATED

MATERIAL NO.: SEE P/N CHART
DOCUMENT NO.: SD-130066-075
SHEET NO.: 1 OF 1
SIZE: B

THIS DRAWING CONTAINS INFORMATION THAT IS PROPRIETARY TO MOLEX INCORPORATED AND SHOULD NOT BE USED WITHOUT WRITTEN PERMISSION