REV.	ECN NO.	DATE	SIGN	DESCRIPTION
B	LEN-910039	2008/11/07	Micky	Change The Seals

ALTW
DCC. DEPT.
CONFIDENTIAL
2009.01.10
ISSUED

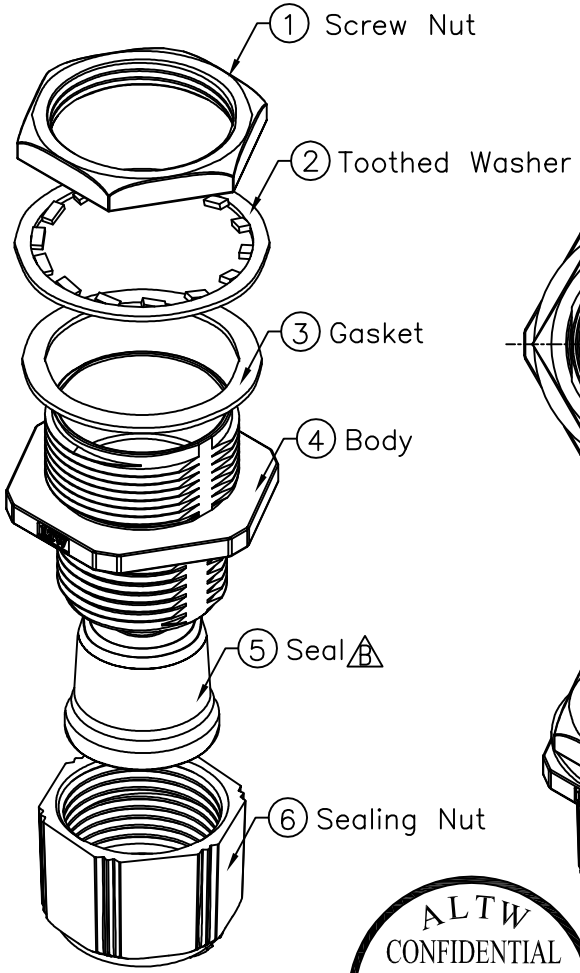

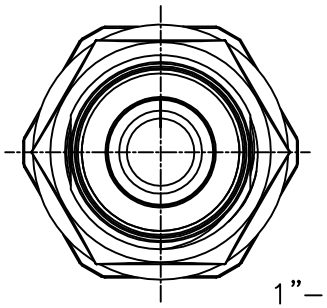

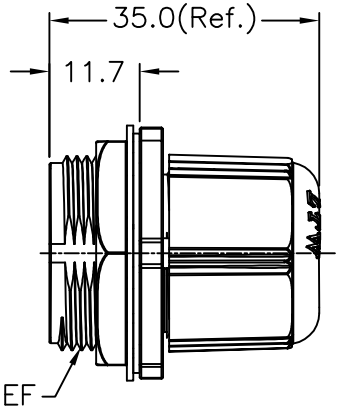

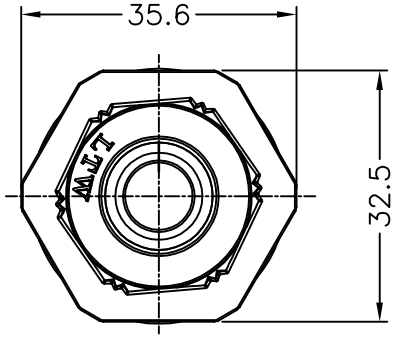

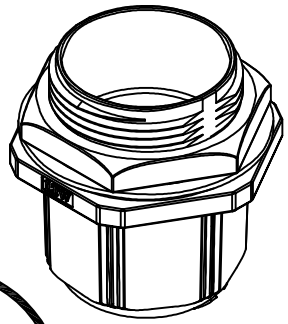

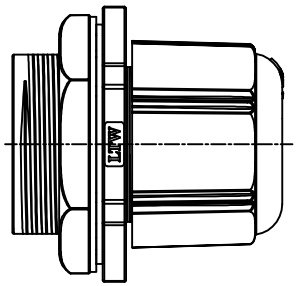

Note:
* Waterproof Rating: IP68(Mated)
* Screw Nut & Body & Sealing Nut: ZDC3,Nickel Plated.
* Tooth Washer:Stainless Steel.
* Gasket & Seal:EPDM,Black.
* Seals OD:ø7.8~ø9.3mm
* Panel Thickness: 5mm max.
* Sealing Nut Torque:9~7 kgf.cm
* Spanner Size:
  Screw Nut: 30mm
  Body: 32.5mm
  Sealing Nut: 24mm

ALTW
CONFIDENTIAL
2008.11.07
R&D DEPT.

UNIT:mm	TITLE: Cable Gland For RJ	Amphenol LTW 安費諾亮泰企業股份有限公司	ITEM NO: CSG-20E002	DRAWN BY: Micky	DATE: 2008/11/07
TOLERANCE: .X ±0.25, .XX ±0.1, .XXX ±0.05, ANGLES ±1°	SCALE: Free / SHEET: 1 OF 1		DWG NO: CSG-20E002	CHECKED BY: Kathy	DATE: 2008/12/07
	REV.: B / SIZE: A4 / QC :Inspection Item		CUSTOMER: ALTW	APPROVED BY: Simon	DATE: 2008/12/07

THIS DOCUMENT IS SUBJECT TO CHANGE WITHOUT NOTICE. IT IS CONFIDENTIAL AND A PROPERTY OF Amphenol LTW. DISCLOSURE TO THIRD PARTY HAS TO BE AUTHORIZED BY Amphenol LTW.