THIS DRAWING IS UNPUBLISHED. RELEASED FOR PUBLICATION ,19 .
© COPYRIGHT 19 BY AMP INCORPORATED. ALL RIGHTS RESERVED.

LOC	DIST
GP	00

REVISIONS

P	LTR	DESCRIPTION	DATE	DWN	APVD
	B	REVISED PER EC 0S13-0165-04	19MAY04	JG	CR

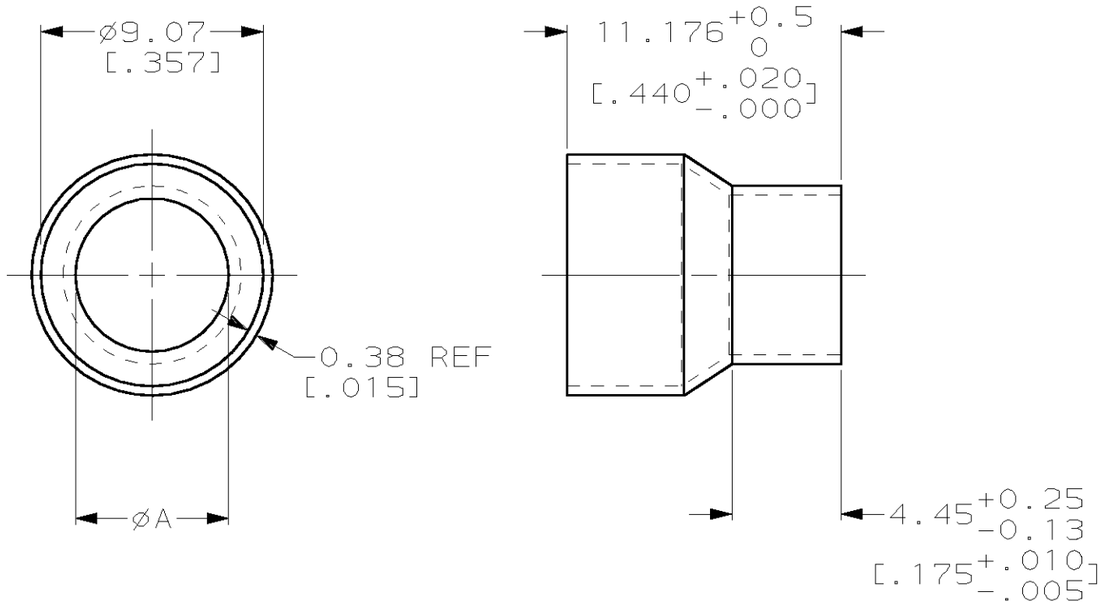

STYLE I

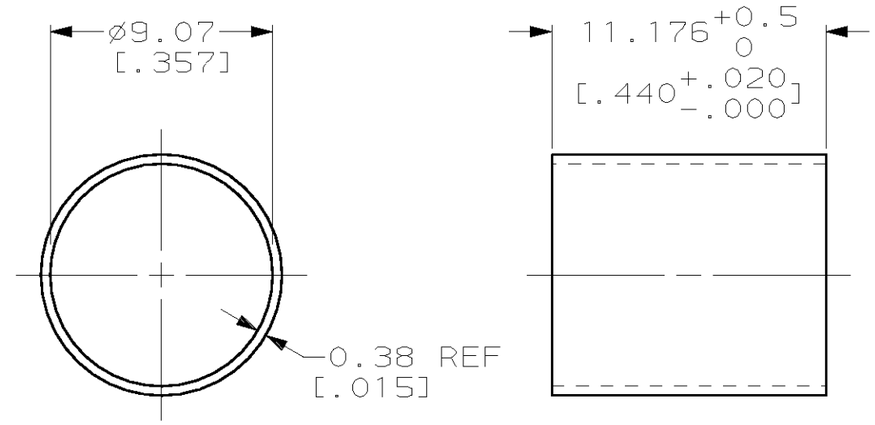

STYLE II

1. 0.0051[.000200] MIN BRIGHT TIN OR BRIGHT TIN-LEAD OVER 0.0025[.000100] MIN COPPER.
2. 0.0051[.000200] MIN BRIGHT TIN OVER 0.0025[.000100] MIN COPPER.

FINISH	INSULATION RANGE DIAMETER, REF	STYLE	A	PART NUMBER
2	4.06-4.83[.160-.190]	I	6.29[.246]	1-1324504-2
2	5.46-6.22[.215-.245]	I	7.62[.300]	1-1324504-1
2	5.97-6.73[.235-.265]	II	–	1-1324504-0
1	4.06-4.83[.160-.190]	I	6.29[.246]	1324504-9
1	5.46-6.22[.215-.245]	I	7.62[.300]	1324504-8
1	5.97-6.73[.235-.265]	II	–	1324504-7

COPYRIGHT 2002
TYCO ELECTRONICS CORP
ALL RIGHTS RESERVED

THIS DRAWING IS A CONTROLLED DOCUMENT.

DIMENSIONS: mm[INCHES]

TOLERANCES UNLESS OTHERWISE SPECIFIED:
0 PLC ±-
1 PLC ±-
2 PLC ±0.13[.005]
3 PLC ±-
4 PLC ±-
ANGLES ±-

MATERIAL: STEEL, ANNEALED
FINISH: SEE TABLE

DWN J.GERACE 18JAN02
CHK C.ROHDE 18JAN02
APVD M.WALMSLEY 18JAN02
PRODUCT SPEC –
APPLICATION SPEC –
WEIGHT –

AMP Incorporated
Harrisburg, PA 17105-3608

NAME: FERRULE, OUTER, HSSDC/HSSDC2

SIZE	CAGE CODE	DRAWING NO	RESTRICTED TO
A3	00779	C- 1324504	–

CUSTOMER DRAWING | SCALE 4:1 | SHEET 1 OF 1 | REV B