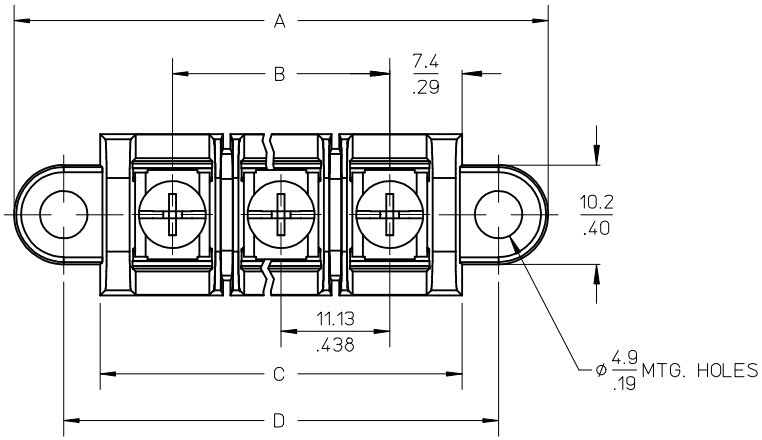

MATERIAL NUMBER (STD.)	MATERIAL NUMBER (-50)	NO. OF CIRCUITS	A	B	C	D
386304602	386305202	2	43.4 (1.71)	11.13 (.438)	25.9 (1.02)	33.3 (1.31)
386304603	386305203	3	54.6 (2.15)	22.22 (.875)	37.1 (1.46)	44.5 (1.75)
386304604	386305204	4	65.7 (2.59)	33.35 (1.313)	48.3 (1.90)	55.6 (2.19)
386304605	386305205	5	76.7 (3.02)	44.45 (1.750)	59.2 (2.33)	66.5 (2.62)
386304606	386305206	6	87.9 (3.46)	55.57 (2.188)	70.4 (2.77)	77.7 (3.06)
386304607	386305207	7	99.1 (3.90)	66.67 (2.625)	81.5 (3.21)	88.9 (3.50)
386304608	386305208	8	110.2 (4.34)	77.80 (3.063)	92.7 (3.65)	100.0 (3.94)
386304609	386305209	9	121.2 (4.77)	88.90 (3.500)	103.6 (4.08)	111.0 (4.37)
386304610	386305210	10	132.3 (5.21)	100.03 (3.938)	114.8 (4.52)	122.2 (4.81)
386304611	386305211	11	143.5 (5.65)	111.13 (4.375)	125.9 (4.96)	133.4 (5.25)
386304612	386305212	12	154.7 (6.09)	122.25 (4.813)	137.2 (5.40)	144.5 (5.69)
386304613	386305213	13	165.6 (6.52)	133.35 (5.250)	148.1 (5.83)	155.4 (6.12)
386304614	386305214	14	176.8 (6.96)	144.45 (5.687)	159.3 (6.27)	166.6 (6.56)
386304615	386305215	15	188.0 (7.40)	155.58 (6.125)	170.4 (6.71)	177.8 (7.00)
386304616	386305216	16	199.1 (7.84)	166.70 (6.563)	181.6 (7.15)	189.0 (7.44)

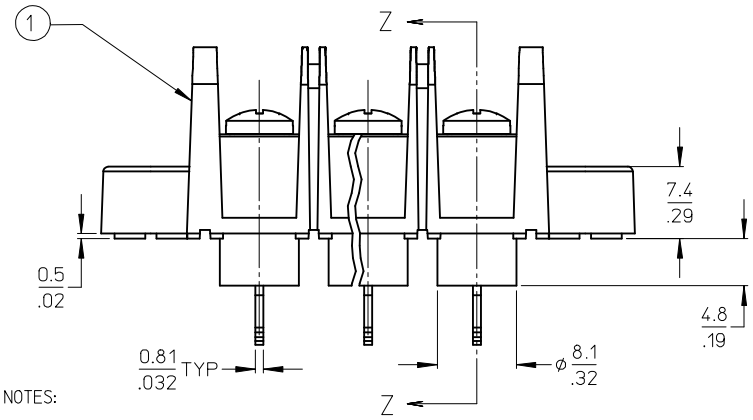

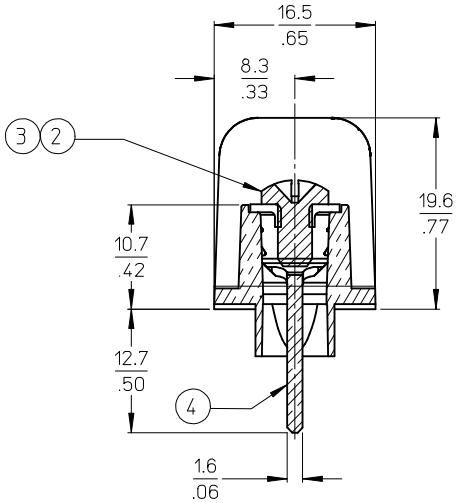

SECTION Z-Z

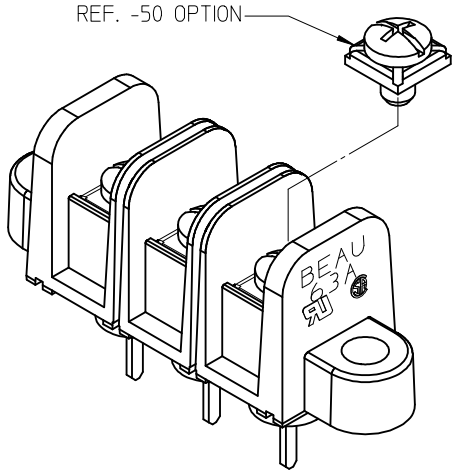

NOTES:

1. MATERIAL: SEE TABLE
2. FINISHES: SEE TABLE
3. PRODUCT SPECIFICATION: NOT REQUIRED
4. PACKAGING: NOT REQUIRED
5. MATES WITH: NONE
6. "XX" REFERS TO QTY. OF CIRCUITS
7. ROHS COMPLIANT (B)

ITEM	QTY.	DESCRIPTION	MATERIAL	FINISH
4	XX	TERMINAL, WIRE WRAP, LONG, #6-32,	BRASS	TIN PLATE
3	XX	SCREW/WSHR #6-32X.250 PAN, PH-SL (-50)	STEEL (B)	ZN, CLEAR CHROMATE
2	XX	SCREW #6-32X.250 BHD, PH-SL (STD.)	STEEL (B)	ZN, CLEAR CHROMATE
1	1	BARRIER TERMINAL STRIP (B)	POLYESTER (PBT)	BLACK

UPDATE MAT. DESCRIP.
EC NO: WNA2009-0085 2008/11/25
DRWN:JENCINAS 2008/12/15
CH'KD:CYORK
APPR: JMACNEIL 2008/12/15
DESCRIPTION
B
REV

QUALITY SYMBOLS
▼=0
(C)=0

GENERAL TOLERANCES (UNLESS SPECIFIED)

	mm	INCH
4 PLACES	± ---	± ---
3 PLACES	± ---	± .005
2 PLACES	± 0.13	± .01
1 PLACE	± 0.3	± ---
ANGULAR ± 2 °		

DRAFT WHERE APPLICABLE MUST REMAIN WITHIN DIMENSIONS

DIMENSION STYLE: MM/IN
SCALE: 2:1
DESIGN UNITS: INCH
THIRD ANGLE PROJECTION

DRAWN BY: R. STONE DATE: 2003/03/25
CHECKED BY: R. KEMP DATE: 2003/03/26
APPROVED BY: P. WALTZ DATE: 2003/03/28

TITLE: 11.13/.438" BTS, 600V PC TAIL W/STD TURRET & MTG ENDS (63A3XX)

molex MOLEX INCORPORATED

MATERIAL NO.: SEE CHART
DOCUMENT NO.: SD-38630-005
SHEET NO.: 1 OF 1
SIZE: B

THIS DRAWING CONTAINS INFORMATION THAT IS PROPRIETARY TO MOLEX INCORPORATED AND SHOULD NOT BE USED WITHOUT WRITTEN PERMISSION