THIS DRAWING IS UNPUBLISHED. RELEASED FOR PUBLICATION 20
© COPYRIGHT 20 BY - ALL RIGHTS RESERVED.

REVISIONS

P	LTR	DESCRIPTION	DATE	DWN	APVD
	A	INITIAL RELEASE	29APR2015	DL	CW

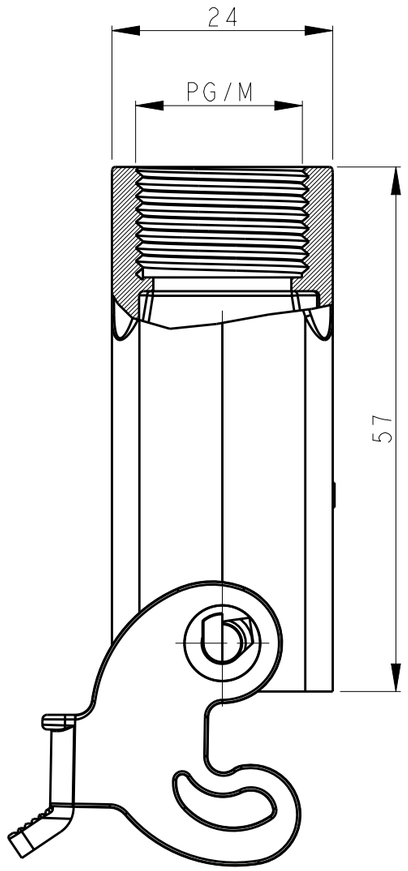

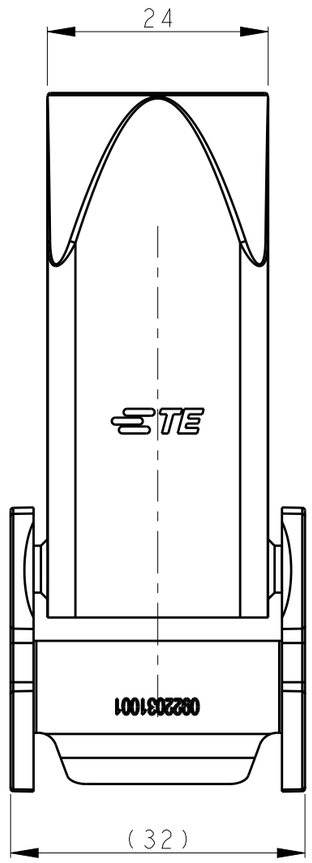

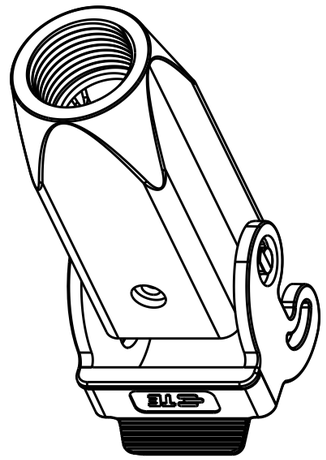

SCALE 1:1

NOTES:
1. TECHNICAL CHARACTERISTICS:
   BODY MATERIAL: PC
   OPERATION TEMPERATURE: -40-+125°C
   DEGREE OF PROTECTION: IP65 (MATED)

注释：
1. 技术参数：
   主体材料：PC
   工作温度：-40-+125°C
   防护等级：IP65(配合)

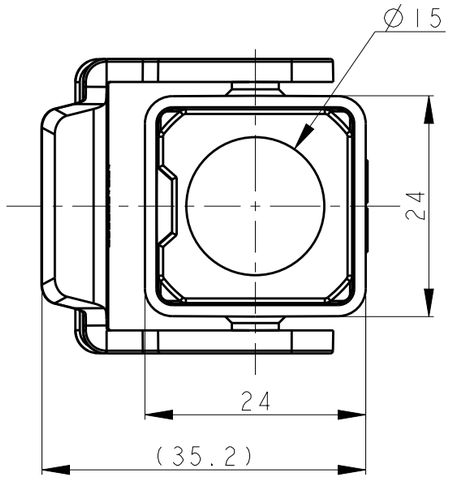

TI739032111-000	H3A-TGVB-PG11	PG11
TI739032120-000	H3A-TGVB-M20	M20
ASSEMBLY PART NUMBER	ASSEMBLY PART DESCRIPTION	PG/M

THIS DRAWING IS A CONTROLLED DOCUMENT.

DIMENSIONS: mm

TOLERANCES UNLESS OTHERWISE SPECIFIED:
0 PLC ±-
1 PLC ±-
2 PLC ±-
3 PLC ±-
4 PLC ±-
ANGLES ±-

MATERIAL - -
FINISH - -

DWN DAVID LI 29APR2015
CHK CHRIS WANG 29APR2015
APVD XU XIANG 29APR2015
PRODUCT SPEC 108-137134
APPLICATION SPEC 114-137134
WEIGHT -

CUSTOMER DRAWING

TE Connectivity

NAME H3A-TGVB-PG/M

SIZE	CAGE CODE	DRAWING NO	RESTRICTED TO
A3	-	C-TI739032IXX000	-

SCALE 3:2 SHEET 1 OF 1 REV A

1470-19 (3/13)