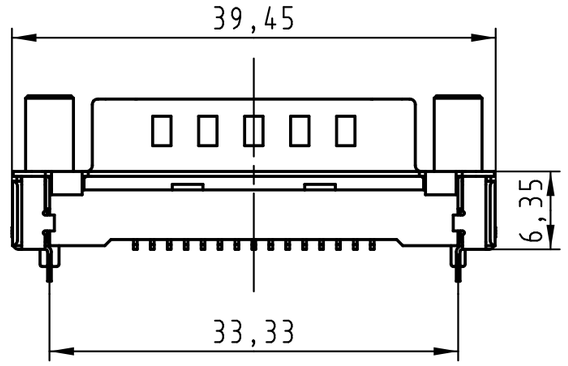

Load vacuum cover

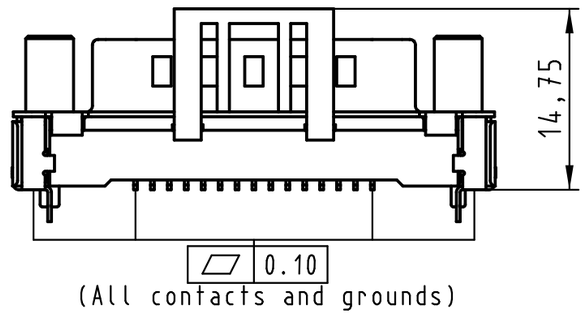

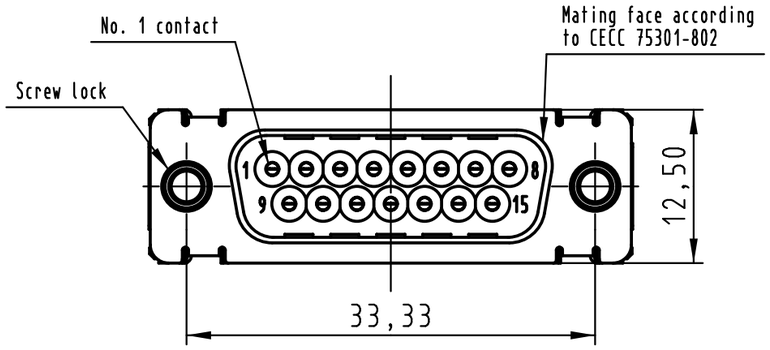

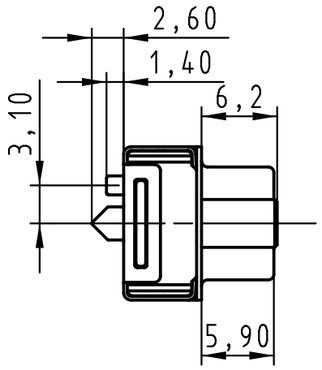

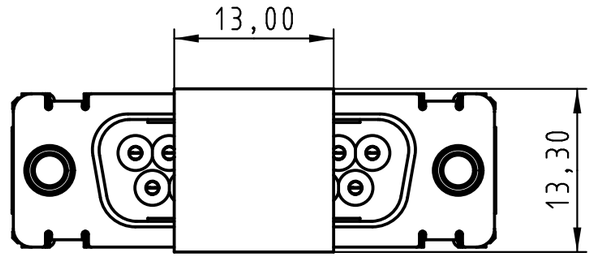

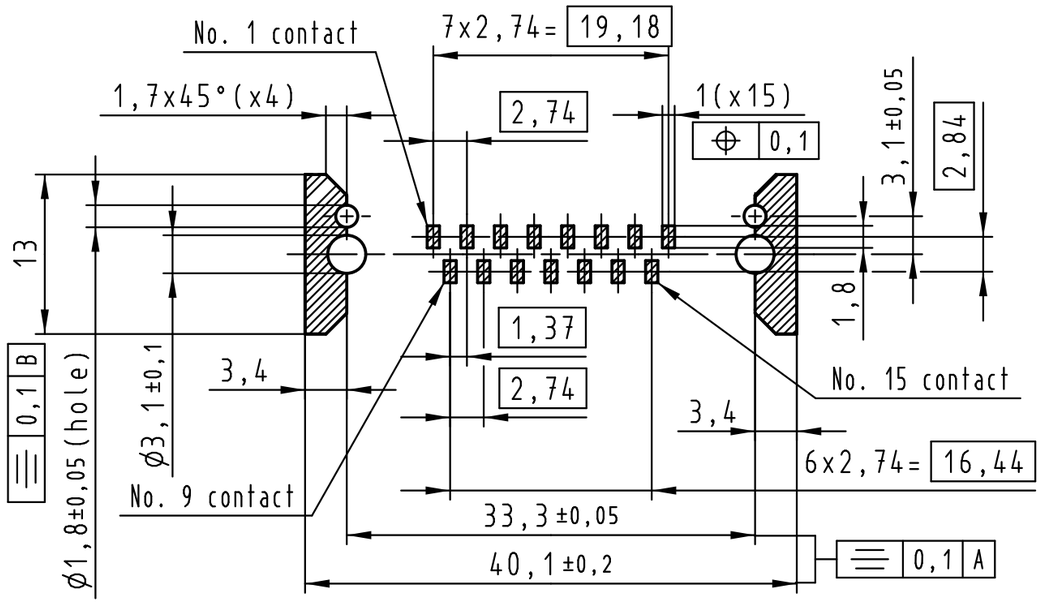

PCB layout, component side

Max. Temperature: 260° during 10 seconds.

0955 269 3821 741	1	M3	Black insulator	Reel Packaging: 140 connectors (See details on page2/2)
0955 269 3822 741	1	4-40 UNC		
0955 269 6821 741	2	M3		
0955 269 6822 741	2	4-40 UNC		
0955 269 7821 741	3	M3		
0955 269 7822 741	3	4-40 UNC		
Part number	PL	Screw lock	Index designation	

All Dimensions in mm
Original Size DIN A 3

Techn. Character.

Free size tolerances

	Dat.	Name	Scale
Detail.	25-Oct-11	Johnson.S	2 : 1
Insp.	17-Nov-11	Steven.W	
Stand.	17-Nov-11	Steven.W	

D-Sub SMT, 15 poles
Male, Straight
with screw locks and ground pins

Mod.	Dat.	Name
EC04070	17-Nov-11	Johnson.S

Zhuhai HARTING Limited

TB 09 55 269 x82x

Sub.

Page 1/2

All rights reserved

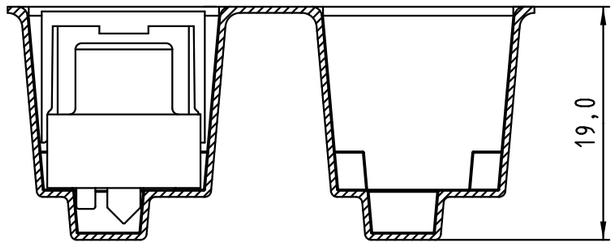

Detail A

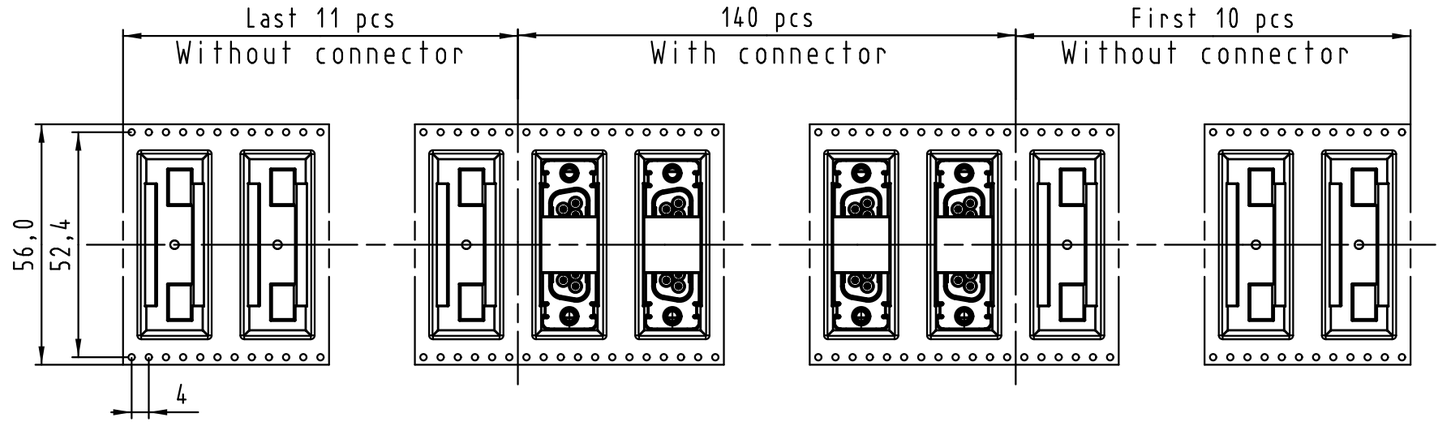

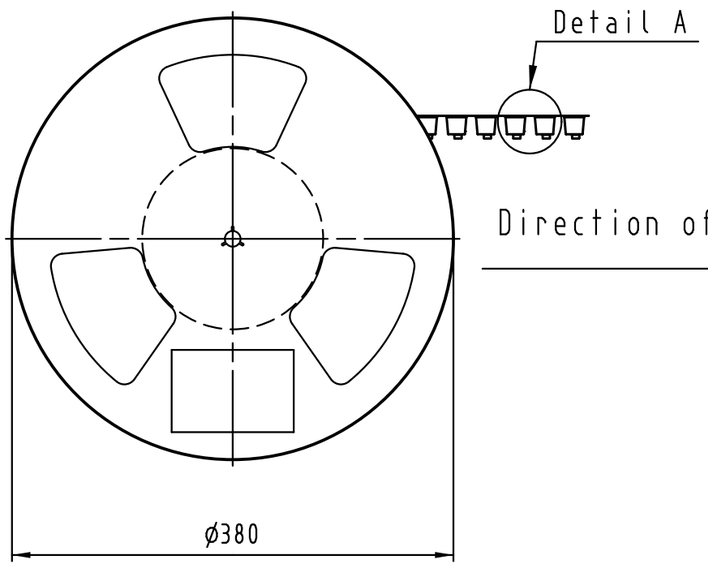

Direction of unreeling

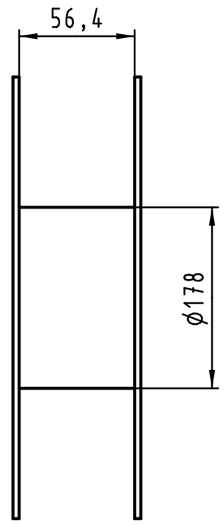

See TB 09 55 269 x82x folio 1/2
for connector dimensions
and PCB layout

Packaging in accordance with
EIA 481-2.

Part number	PL	Screw lock	Index designation	
0955 269 3821 741	1	M3	Black insulator	Reel Packaging: 140 connectors
0955 269 3822 741	1	4-40 UNC		
0955 269 6821 741	2	M3		
0955 269 6822 741	2	4-40 UNC		
0955 269 7821 741	3	M3		
0955 269 7822 741	3	4-40 UNC		

All Dimensions in mm
Original Size DIN A 3

Techn. Character.

Free size tolerances

	Dat.	Name	Scale
Detail.	25-Oct-11	Johnson.S	
Insp.	17-Nov-11	Steven.W	
Stand.	17-Nov-11	Steven.W	

D-Sub SMT, 15 poles
Male, Straight
with screw locks and ground pins

Mod.	Dat.	Name
EC04070	17-Nov-11	Johnson.S

Zhuhai HARTING Limited

TB 09 55 269 x82x

Sub.

Page 2/2

All rights reserved