B AJ-165

PART NUMBER	MILITARY PART NO.	CABLE DIA.	BUSHING
AJ-165/13-1	M55116/13-1	.165 ±.010	AP-116-17
AJ-165/13-2	M55116/13-2	.228 ±.010	AP-116-18
AJ-165/13-3	M55116/13-3	.250 ±.010	AP-116-8
AJ-165/13-4	M55116/13-4	.290 ±.010	AP-116-19

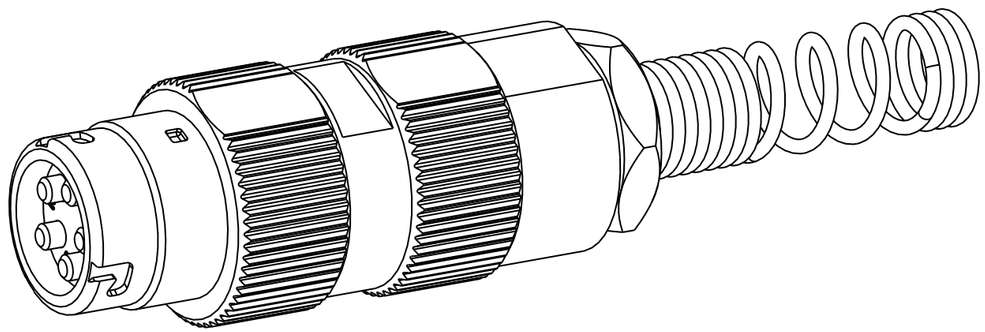

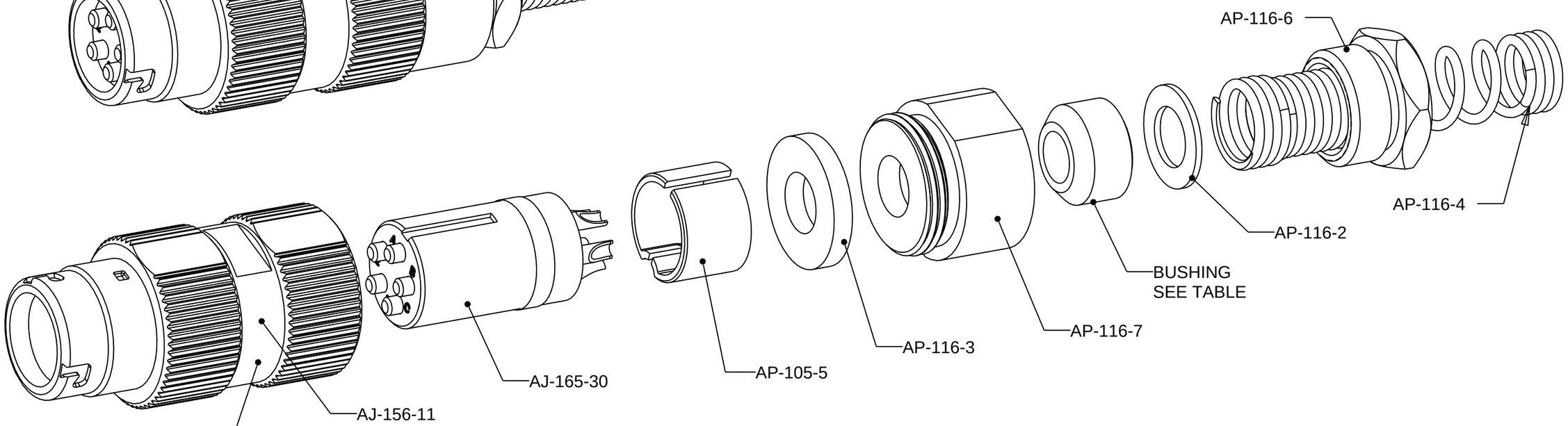

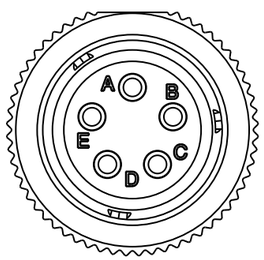

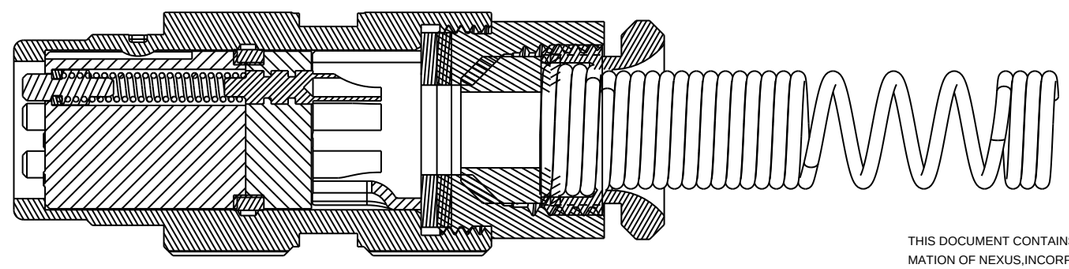

NOTES;
1. CONNECTORS ARE QUALIFIED TO MIL-DTL-55116.
2. MARK MILITARY PART IDENTFYING NO., MANUFACTURERS NAME AND CAGE CODE LOCATED APPROXIMATELY AS SHOWN.

THIS DOCUMENT CONTAINS PROPRIETARY INFORMATION OF NEXUS,INCORPORATED AND SUCH INFORMATION MAY NOT BE DISCLOSED TO OTHERS FOR ANY PURPOSE OR USED FOR ANY PURPOSE WITHOUT THE WRITTEN CONSENT OF NEXUS.

LET.	REVISION	CN #	DATE	CHK.
A	ADD NOTES AND TABLE AJ-156-11 WAS AP-156-11	037	12/17/09	GPH

DWN.BY LDE — DATE 13-Jul-09
CHECKED BY — DATE
APPR.BY — DATE

UNLESS OTHERWISE SPECIFIED DIMENSIONS ARE IN INCHES TOLERANCES ON
.XX ——— .XXX ±.003 ANGLES ±.5 °

MATERIAL
FINISH
WEIGHT ——— SCALE = 2.00 :1
TITLE
JACK, 5 PIN AUDIO, SOLDER
DO NOT SCALE DWG. SHEET 1 OF 1

NEXUS
STAMFORD,CONN
SIZE B DWG. NO. AJ-165