THIS DRAWING IS UNPUBLISHED. RELEASED FOR PUBLICATION -,- .
© COPYRIGHT - By - ALL RIGHTS RESERVED.

LOC	DIST
AJ	16

REVISIONS

P	LTR	DESCRIPTION	DATE	DWN	APVD
	AV4	REVISED PER ECO-15-015517	21NOV17	LN	RS

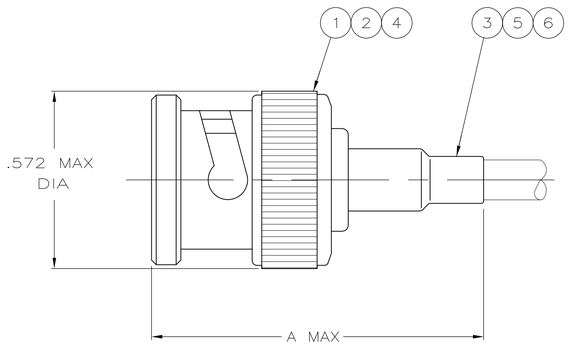

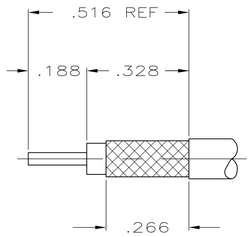

VIEW A

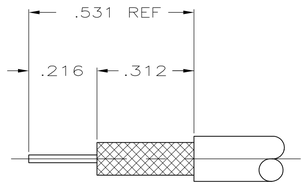

VIEW B

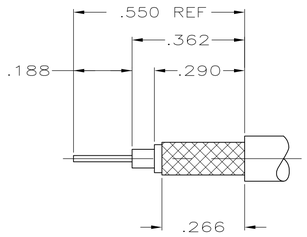

VIEW C

1. CABLE USED WITHOUT SPACER
2. CABLE USED WITH SPACER
3. SEE INSTRUCTION SHEET 408-2798
4. PARTS PACKAGED UNASSEMBLED
5. USE WITH HAND TOOL FRAME 354940-1
6. USE WITH HANDTOOL 69710-1, OR PNEUMATIC TOOL 69365 & 69365-3
7. OBSOLETE PARTS: OBSOLETE CIS STREAMLINING PER D.RENAUD/D.SINISI

RECOMMENDED STRIP LENGTH

	CABLE SIZE	DIE SET 6	DIE SET 5	CRIMP TOOL	VIEW	A	6 TUBING,HEAT SHRINK QTY=1	5 TUBING QTY=1	4 SPACER QTY=1	3 FERRULE QTY=1	2 CONTACT, PLUG QTY=1	1 PLUG ASSY, COML BNC QTY=1	PART NUMBER
OBSOLETE	H.P. RED TRIAXIAL	–	58330-1	69477-4	C	1.090	1-938013-3	–	–	9-329461-0	9-227322-0	413530-6	4-227079-0
OBSOLETE	RG-180/U,180A/U,180B/U & 195/U	–	58330-1	69477-4	A	1.090	–	–	–	9-329461-0	9-221607-4	413530-5	3-227079-7
SUPERSEDED by 8-227079-2	RG-188/U DOUBLE BRAIDED	–	58330-1	69477-4	A	1.090	–	227194-1	–	9-329049-0	9-227322-0	413530-6	3-227079-3
OBSOLETE	BELDEN 9248	–	220244-1	220247-1	A	1.090	–	–	–	9-50427-0	1-221607-7	413530-3	3-227079-2
OBSOLETE	BELDEN 9248	–	220244-1	220247-1	A	1.090	–	–	–	9-50427-0	1-221607-8	413530-3	3-227079-1
OBSOLETE	BELDEN 9248 & 9114	–	220244-1	220247-1	A	1.090	–	–	–	9-50427-0	1-221607-6	413530-3	3-227079-0
	RG-179/U & 187/U	220217-3	220210-1	220009-5	A	1.090	–	227194-1	–	9-328666-0	227322-4	227074-2	2-227079-2
SUPERSEDED BY 2-227079-2	RG-179/U & 187/U	220217-3	220210-1	220009-5	A	1.090	–	227194-1	–	9-328666-0	227322-3	413530-6	2-227079-1
SUPERSEDED BY 2-5227079-0	RG-179/U & 187/U	220217-3	220210-1	220009-5	A	1.090	–	227194-1	–	9-328666-0	9-227322-1	413530-6	2-227079-0
	BELDEN 8218,AMPHENOL 21-597 & BELDEN NH SPECIAL	–	58330-1	69477-4	A	1.090	–	–	–	9-329461-0	2-221607-2	413530-5	1-227079-9
SUPERSEDED BY 1-227079-9	BELDEN 8218,AMPHENOL 21-597 & BELDEN NH SPECIAL	–	58330-1	69477-4	A	1.090	–	–	–	9-329461-0	2-221607-1	413530-5	1-227079-8
OBSOLETE	BELDEN 8218,AMPHENOL 21-597 & BELDEN NH SPECIAL	–	58330-1	69477-4	A	1.090	–	–	–	9-329461-0	9-221607-3	413530-5	1-227079-7
SUPERSEDED BY 1-5227079-6	RG-174/U & 188/U	220217-3	220210-1	220009-5	A	1.090	–	227194-1	–	9-328666-0	227322-8	227074-2	1-227079-6
SUPERSEDED BY 1-227079-6	RG-174/U & 188/U	220217-3	220210-1	220009-5	A	1.090	–	227194-1	–	9-328666-0	227322-7	413530-6	1-227079-5
OBSOLETE	RG-174/U & 188/U	220217-3	220210-1	220009-5	A	1.090	–	227194-1	–	9-328666-0	9-227322-0	413530-6	1-227079-4
OBSOLETE	BELDEN 9266	–	220189-5	–	A	1.090	–	–	–	9-50428-0	221607-5	413530-2	1-227079-3
OBSOLETE	RG-71/U & 71A/U	220217-2	220189-2	220187-2	B	1.090	–	–	227423-1	1-329460-1	221607-8	413530-2	1-227079-2
	RG-59/U,59A/U & 59B/U	220217-2	220189-2	220187-2	A	1.090	–	–	227423-1	9-50428-0	221607-8	413530-2	1-227079-1
	RG-62/U,62A/U & 62B/U				B								
SUPERSEDED BY 227079-6	RG-55/U,55A/U,55B/U, & 223/U	220217-1	220189-1	220187-1	A	1.280	–	–	–	9-225382-0	221607-7	227074-1	1-227079-0
	RG-58/U,58A/U,58B/U,58C/U & 141/U	220217-1	220189-1	220187-1	A	1.090	–	–	–	9-50427-1	221607-7	227074-1	227079-9
	RG-59/U,59A/U & 59B/U	~~220217-2~~	~~220189-2~~	~~220187-2~~	A	~~1.090~~	~~–~~	~~–~~	~~227423-1~~	~~9-50428-~~0	221607-6	227080-1	227079-7
	RG-62/U,62A/U & 62B/U				B								
	RG-55/U,55A/U,55B/U, & 223/U	220217-1	220189-1	220187-1	A	1.280	–	–	–	9-225382-0	221607-5	227074-1	227079-6
	RG-58/U,58A/U,58B/U,58C/U & 141/U	220217-1	220189-1	220187-1	A	1.090	–	–	–	9-50427-1	221607-5	227074-1	227079-5
OBSOLETE	RG-71/U & 71A/U	220217-2	220189-2	220187-2	B	1.090	–	–	227423-1	1-329460-1	9-221607-1	413530-2	227079-4
OBSOLETE	RG-59/U,59A/U & 59B/U	220217-2	220189-2	220187-2	A	1.090	–	–	227423-1	9-50428-0	9-221607-1	413530-2	227079-3
	RG-62/U,62A/U & 62B/U				B								
SUPERSEDED BY 227079-6	RG-55/U,55A/U,55B/U, & 223/U	220217-1	220189-1	220187-1	A	1.280	–	–	–	9-225382-0	9-221607-0	227074-1	227079-2
OBSOLETE	RG-58/U,58A/U,58B/U,58C/U & 141/U	220217-1	220189-1	220187-1	A	1.090	–	–	–	9-50427-1	9-221607-0	227074-1	227079-1

THIS DRAWING IS A CONTROLLED DOCUMENT.

DIMENSIONS: INCHES

TOLERANCES UNLESS OTHERWISE SPECIFIED:
0 PLC ± –
1 PLC ± –
2 PLC ± –
3 PLC ± .016
4 PLC ± –
ANGLES ± –

MATERIAL –
FINISH –

DWN D.LAMAN 10-9-89
CHK R.E.RUTH 10/27/89
APVD J. GIBBS 11/06/89
PRODUCT SPEC 108-12044
APPLICATION SPEC –
WEIGHT –

TE Connectivity

NAME PLUG, COMMERCIAL, BNC

SIZE	CAGE CODE	DRAWING NO	RESTRICTED TO
A1	00779	C-227079	–

CUSTOMER DRAWING

SCALE	SHEET	REV
4:1	1 OF 2	AV4

4805 (3/11)

THIS DRAWING IS UNPUBLISHED. RELEASED FOR PUBLICATION - ,- .
© COPYRIGHT - By - ALL RIGHTS RESERVED.

LOC	DIST
AJ	16

REVISIONS

P	LTR	DESCRIPTION	DATE	DWN	APVD
	-	SEE SHEET 1	-	-	-

OBSOLETE	BELDON 9907	220217-1	220189-1	220187-1	A	1.090	-	-	-	9-50427-1	1-221607-6	227074-1	9-227079-4
2 1 OBSOLETE	HI-TEMP RG62A/U, TIMES PL62, BERK-TEK BTDC 62 & BELDEN 89269	220217-2	220189-2	220187-2	B	1.312	-	-	227423-1	9-228784-0	221607-6	413530-2	9-227079-3
	BELDEN 88241,BERK-TEK BTDC 59				B								
OBSOLETE	BELDEN 8218, AMPHENOL 21-597 AND BELDEN NH SPECIAL	-	58330-1	69477-4	A	1.090	-	-	-	9-329461-0	2-221607-2	413530-5	9-227079-2
OBSOLETE	BELDEN YR40862	220217-1	220189-1	220187-1	A	1.090	-	-	-	9-50427-1	2-221607-8	227074-1	9-227079-1
OBSOLETE	C&M 17189	220217-3	220210-1	220009-5	A	1.090	-	414932-2	-	9-328666-0	227322-8	227074-2	9-227079-0
OBSOLETE	BELDEN 9907 AND RG-141A/U	220217-1	220189-1	220187-1	A	1.090	-	-	-	9-50427-1	1-221607-6	227074-1	8-227079-9
OBSOLETE	CUSTOM CABLE: C/C=Ø.014, DIELECTRIC=Ø.062, JACKET=Ø.103	-	220210-1	-	A	1.090	-	227194-1	-	9-328666-0	1-227322-4	413530-6	8-227079-8
OBSOLETE	BELDEN 9266	-	220189-5	-	A	1.090	-	-	-	9-50428-0	221607-5	413530-2	8-227079-7
OBSOLETE	BELDEN 89907	-	318452-2	-	A	1.312	-	-	-	9-228783-0	1-221607-6	227074-1	8-227079-6
OBSOLETE	RG-59/U, 59A/U, 59B/U	220217-2	220189-2	220187-2	A	1.090	-	-	227423-1	9-50428-0	9-221607-1	413530-2	8-227079-5
	RG-62/U, 62A/U, 62B/U				B								
OBSOLETE	RG-58/U,58A/U,58B/U,58C/U AND 141/U	220217-1	220189-1	220187-1	A	1.090	-	-	-	9-50427-1	221607-5	227074-1	8-227079-4
OBSOLETE	BELDEN 9555	-	220189-2	220187-2	A	1.090	-	-	-	9-50428-0	221607-6	413530-2	8-227079-3
	RG-188 DOUBLE BRAID AND RG-316 DOUBLE BRAID	-	58330-1	69477-4	A	-	-	227194-1	-	9-329049-0	227322-8	413530-6	8-227079-2
1	RG-59/U,59A/U AND 59B/U	220217-2	220189-2	220187-2	A	1.090	-	-	227423-1	9-50428-0	221607-6	413530-2	8-227079-1
2	RG-62/U,62A/U AND 62B/U				B								
	RG-58/U,58A/U,58B/U,58C/U, AND 141/U	220217-1	220189-1	220187-1	A	1.090	-	-	-	9-50427-1	221607-5	227074-1	8-227079-0
OBSOLETE	GORE CXN1426A	-	58330-2	-	A	1.090	-	-	-	9-329049-0	1-221607-6	413530-5	7-227079-9
OBSOLETE	SPECIAL CUSTOMER CABLE-110 OHM LOW NOISE	-	58086-1	-	A	1.090	-	-	-	9-50427-0	2-221607-6	413530-3	7-227079-7
OBSOLETE	BELDEN 88241,TIMES PL62,BERK-TEK BTDC 59 AND BTDC 62	220217-2	220189-2	220187-2	A	1.312	-	-	227423-1	9-228784-0	221607-8	413530-2	7-227079-6
	BELDEN 88240 AND BERK-TEK BTDC-58	220217-1	220189-1	220187-1	A	1.312	-	-	-	9-228783-0	221607-5	227074-1	7-227079-5
OBSOLETE	RG-62/U,62A/U AND 62B/U	220217-2	220189-2	220187-2	B	1.090	-	-	227423-1	9-50428-0	9-221607-1	413530-2	7-227079-4
	RG-59/U,59A/U AND 59B/U				A								
	RG-58/U,58A/U,58B/U,58C/U AND 141/U	220217-1	220189-1	220187-1	A	1.090	-	-	-	9-50427-1	9-221607-0	227074-1	7-227079-3
2	RG-62/U,62A/U AND 62B/U	220217-2	220189-2	220187-2	B	1.090	-	-	227423-1	9-50428-0	221607-8	413530-2	7-227079-2
1	RG-59/U,59A/U AND 59B/U				A								
OBSOLETE	RG-58/U,58A/U,58B/U,58C/U AND 141/U	220217-1	220189-1	220187-1	A	1.090	-	-	-	9-50427-1	221607-7	227074-1	7-227079-1
OBSOLETE	BELDEN 9275	-	220189-5	-	A	1.090	-	-	-	9-50428-1	9-221607-0	413530-2	7-227079-0
OBSOLETE	C & M COAXIAL Q-81-13059	-	58330-1	69477-4	A	1.090	-	227194-1	-	9-329461-0	227322-8	413530-6	6-227079-9
SUPERSEDED BY 6-5227079-8	BELDEN 89907	-	318452-2	-	A	1.312	-	-	-	9-228783-0	1-221607-6	227074-1	6-227079-8
	BELDEN 9907 AND RG-141A/U	220217-1	220189-1	220187-1	A	1.090	-	-	-	9-50427-1	1-221607-6	227074-1	6-227079-7
SUPERSEDED BY 6-5227079-5	BELDEN 9290	-	-	220043-1	A	1.490	-	-	-	9-51713-3	1-221607-6	413530-3	6-227079-5
	BELDEN 9907	220217-1	220189-1	220187-1	A	1.090	-	-	-	9-50427-1	1-221607-6	227074-1	6-227079-4
OBSOLETE	RG-180/U,180A/U,180B/U AND 195/U	-	58330-1	69477-4	A	1.090	-	-	-	9-329461-0	2-221607-4	413530-5	6-227079-3
	RG-142/U,142A/U, AND 142B/U	220217-1	220189-1	220187-1	A	1.280	-	-	-	9-225382-0	1-221607-7	227074-1	6-227079-2
SUPERSEDED BY 6-5227079-1	RG-142/U,142A/U, AND 142B/U	220217-1	220189-1	220187-1	A	1.280	-	-	-	9-225382-0	1-221607-6	227074-1	6-227079-1
OBSOLETE	RG-142/U,142A/U, AND 142B/U	220217-1	220189-1	220187-1	A	1.280	-	-	-	9-225382-0	1-221607-8	227074-1	6-227079-0
OBSOLETE	RG-174/U (SPECIAL APPLICATION)	-	-	-	A	1.090	-	227194-1	-	9-50427-1	227322-8	413530-6	5-227079-9
OBSOLETE	BELDEN 8281	-	-	220043-1	A	1.250	-	-	-	9-50427-2	221607-5	413530-3	5-227079-8
SUPERSEDED BY 1-227079-1	RG-59U,59A/U AND 59B/U	220217-2	220189-2	220187-2	A	1.090	-	-	-	9-50428-0	221607-8	413530-2	5-227079-7
OBSOLETE	C & M COAXIAL 6P267B33TC20PC055520	-	-	-	A	1.090	-	227194-1	-	9-329049-1	9-227322-0	413530-6	5-227079-6
OBSOLETE	RC-174/U AND 188/U TYPE (SPECIAL)	-	58330-1	69477-4	-	-	-	227194-1	-	-	227322-8	413530-6	5-227079-5
OBSOLETE	BELDEN 8281	220088-1	220189-6	220043-1	A	1.250	-	-	-	9-50427-2	221607-7	413530-3	5-227079-4
SUPERSEDED	HI TEMP RG-59/U,TIMES PL59 AND PLF59	-	220189-5	-	A	1.312	-	-	-	9-228784-0	221607-5	413530-2	5-227079-3
OBSOLETE	HI TEMP RG-59/U,TIMES PL59 AND PLF59	-	220189-5	-	A	1.312	-	-	-	9-228784-0	221607-7	413530-2	5-227079-2
	HI TEMP RG-59/U,TIMES PL59 AND PLF59	-	220189-5	-	A	1.312	-	-	-	9-228784-0	9-221607-0	413530-2	5-227079-1
OBSOLETE	TIMES MI-2040 DBL BRAIDED RG-59/U	-	-	59894-1	A	1.187	-	-	-	9-50427-0	1-221607-4	413530-2	5-227079-0
OBSOLETE	HI-TEMP RG62A/U, TIMES PL62, BERK-TEK BTDC 62 & BELDEN 89269	220217-2	220189-2	220187-2	B	1.312	-	-	227423-1	9-228784-0	221607-6	413530-2	4-227079-9
	BELDEN 88241,BERK-TEK BTDC 59				A								
2 1 OBSOLETE	HI TEMP RG-62A/U,TIMES PL62,BERK-TEK BTDC 62	220217-2	220189-2	220187-2	B	1.312	-	-	227423-1	9-228784-0	221607-8	413530-2	4-227079-8
	BELDEN 88241,BERK-TEK BTDC 59				A								
2 1 OBSOLETE	HI TEMP RG-62A/U,TIMES PL62,BERK-TEK BTDC 62	220217-2	220189-2	220187-2	B	1.312	-	-	227423-1	9-228784-0	9-221607-1	413530-2	4-227079-7
	BELDEN 88241,BERK-TEK BTDC 59				A								
	BELDEN 88240 AND BERK-TEK BTDC-58	220217-1	318452-2	-	A	1.312	-	-	-	9-228783-0	221607-5	227074-1	4-227079-3
OBSOLETE	BELDEN 88240 AND BERK-TEK BTDC-58	220217-1	220189-1	220187-1	A	1.312	-	-	-	9-228783-0	221607-7	227074-1	4-227079-2
SUPERSEDED BY 4-227079-3	BELDEN 88240 AND BERK-TEK BTDC-58	220217-1	220189-1	220187-1	A	1.312	-	-	-	9-228783-0	9-221607-0	227074-1	4-227079-1
	CABLE SIZE	DIE SET 6	DIE SET 5	CRIMP TOOL	VIEW	A	6 TUBING,HEAT SHRINK QTY=1	5 TUBING QTY=1	4 SPACER QTY=1	3 FERRULE QTY=1	2 CONTACT, PLUG QTY=1	1 PLUG ASSY, COML BNC QTY=1	PART NUMBER

THIS DRAWING IS A CONTROLLED DOCUMENT.

DIMENSIONS: INCHES

TOLERANCES UNLESS OTHERWISE SPECIFIED:
0 PLC ± -
1 PLC ± -
2 PLC ± -
3 PLC ± -
4 PLC ± -
ANGLES ± -

MATERIAL -
FINISH -

DWN D. LAMAN 10-9-89
CHK R. E. RUTH 10/27/89
APVD J. GIBBS 11/06/89
PRODUCT SPEC -
APPLICATION SPEC -
WEIGHT -

TE Connectivity

NAME PLUG, COMMERCIAL, BNC

SIZE A1 | CAGE CODE 00779 | DRAWING NO C-227079 | RESTRICTED TO -

CUSTOMER DRAWING | SCALE 4:1 | SHEET 2 OF 2 | REV AV4

4805 (3/11)