THIS DRAWING IS UNPUBLISHED. RELEASED FOR PUBLICATION 20
© COPYRIGHT 20 BY TYCO ELECTRONICS CORPORATION. ALL RIGHTS RESERVED.

LOC	DIST
GP	00

REVISIONS

P	LTR	DESCRIPTION	DATE	DWN	APVD
	A1	REVISED PER ECO-09-021480	08OCT2009	CR	DG

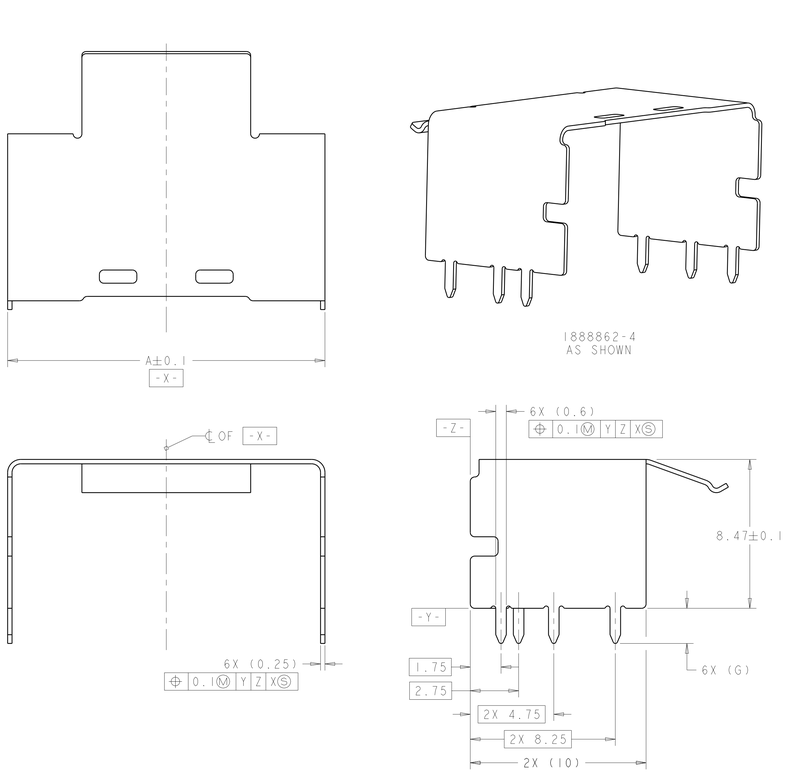

FIGURE M

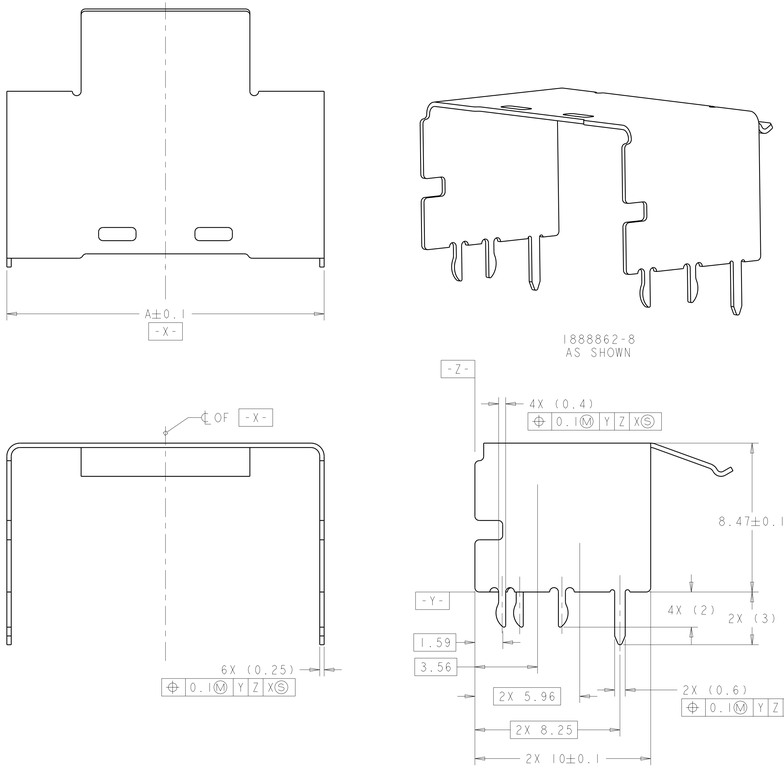

FIGURE N

M	1761987-2	3.5	36	17.8	16	18.05	36	1-1888862-6
M	1761987-2	2.8	36	17.8	16	18.05	36	1-1888862-2
N	1761987-2	-	36	17.8	16	18.05	36	1888862-8
M	1761987-2	2	36	17.8	16	18.05	36	1888862-4
FIGURE	CONNECTOR PART NUMBER	G	F	E	D	A	POSN	PART NUMBER

1. MATERIAL: NICKEL-SILVER PER ASTM B 122.
2. SHELL ASSEMBLY TO BE USED WITH THE SURFACE MOUNT RECEPTACLE CONNECTOR PART NUMBER REFERENCED IN TABLE
3. DATUM AND BASIC DIMENSION ESTABLISHED BY CUSTOMER

THIS DRAWING IS A CONVERTED DOCUMENT FROM TYCO ELECTRONICS CORPORATION. IT IS PROVIDED AS A REFERENCE ONLY. ANY CHANGES TO THIS DOCUMENT SHOULD BE CONTROLLED FOR THE LATEST REVISION.

DIMENSIONS: mm

TOLERANCES UNLESS OTHERWISE SPECIFIED:
0 PLC ±-
1 PLC ±0.1
2 PLC ±-
3 PLC ±-
4 PLC ±-
ANGLES ±-
FINISH:

MATERIAL: 1

2

DWN B. MCMASTER	21FEB07	Tyco Electronics — Tyco Electronics, Harrisburg, PA 17105-3608
CHK D. GORENC	21FEB07	
APVD D. GORENC	21FEB07	NAME: EVERCLEAR Mini-SAS INTERNAL SHELL, RIGHT ANGLE RECEPTACLE, UNKEYED
PRODUCT SPEC 108-2234		
APPLICATION SPEC -		SIZE A1 · CAGE CODE 00779 · DRAWING NO C-1888862 · RESTRICTED TO -
WEIGHT -		
CUSTOMER DRAWING		SCALE 1:1 · SHEET 1 OF 2 · REV A1

THIS DRAWING IS UNPUBLISHED. RELEASED FOR PUBLICATION 20
© COPYRIGHT 20 BY TYCO ELECTRONICS CORPORATION. ALL RIGHTS RESERVED.

LOC	DIST.
GP	00

REVISIONS

P	LTR	DESCRIPTION	DATE	DWN	APVD
	-	SEE SHEET 1	-	-	-

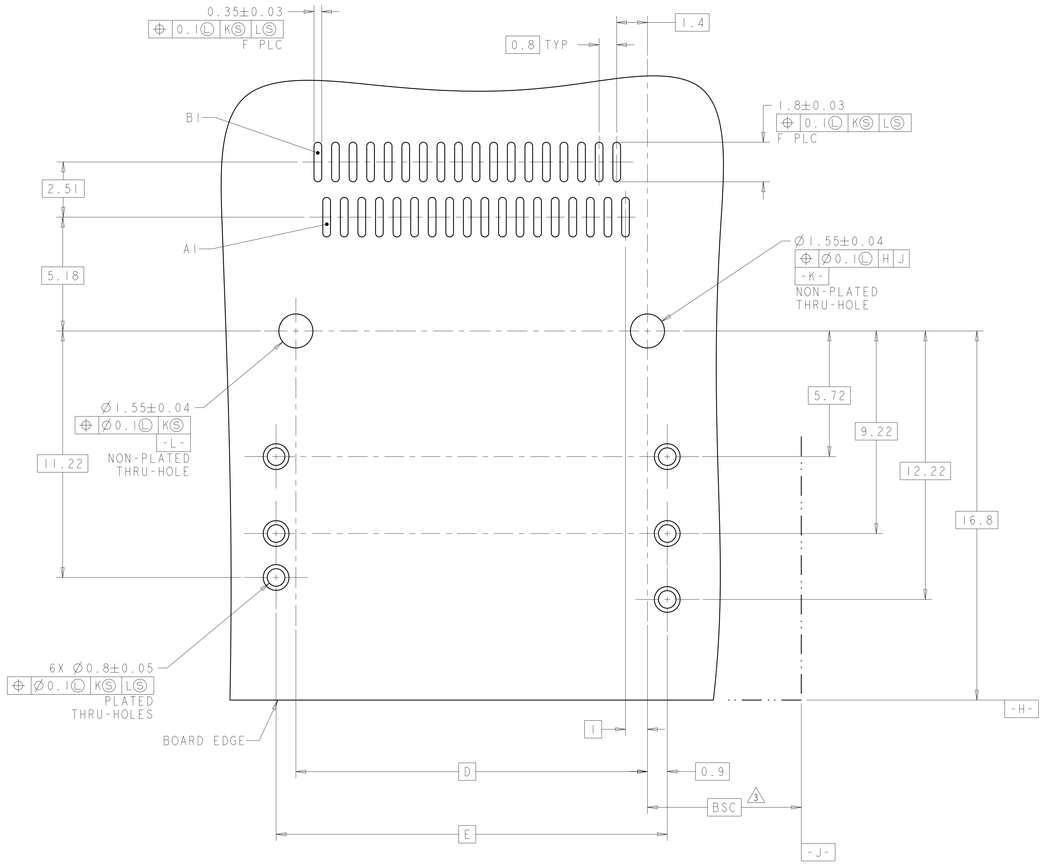

RECOMMENDED PCB LAYOUT
SCALE 10:1

THIS DRAWING IS A CONVERTED DOCUMENT FROM TYCO ELECTRONICS CORPORATION CAD SYSTEM. ALL CHANGES MADE TO THIS DOCUMENT AFTER CONVERSION SHOULD BE CONFIRMED FOR THE LATEST REVISION.

DIMENSIONS: mm

TOLERANCES UNLESS OTHERWISE SPECIFIED:
0 PLC ±-
1 PLC ±0.1
2 PLC ±0.1
3 PLC ±-
4 PLC ±-
ANGLES ±-

MATERIAL: -
FINISH: -

DWN B. MCMASTER 21FEB07
CHK D. GORENC 21FEB07
APVD D. GORENC 21FEB07

PRODUCT SPEC 108-2234
APPLICATION SPEC -
WEIGHT: -

CUSTOMER DRAWING

Tyco Electronics
Tyco Electronics
Harrisburg, PA 17105-3608

NAME
EVERCLEAR Mini-SAS INTERNAL SHELL, RIGHT ANGLE RECEPTACLE, UNKEYED

SIZE	CAGE CODE	DRAWING NO	RESTRICTED TO
A1	00779	C-1888862	-

SCALE 5:1 SHEET 2 OF 2 REV A1

ANP 4805 REV 31MAR2000