THIS DRAWING IS UNPUBLISHED. RELEASED FOR PUBLICATION -,- .
© COPYRIGHT - By - ALL RIGHTS RESERVED.

LOC	DIST
—	—

REVISIONS

P	LTR	DESCRIPTION	DATE	DWN	APVD
	A	REV PER ECO-12-020950	10DEC12	PY	DW

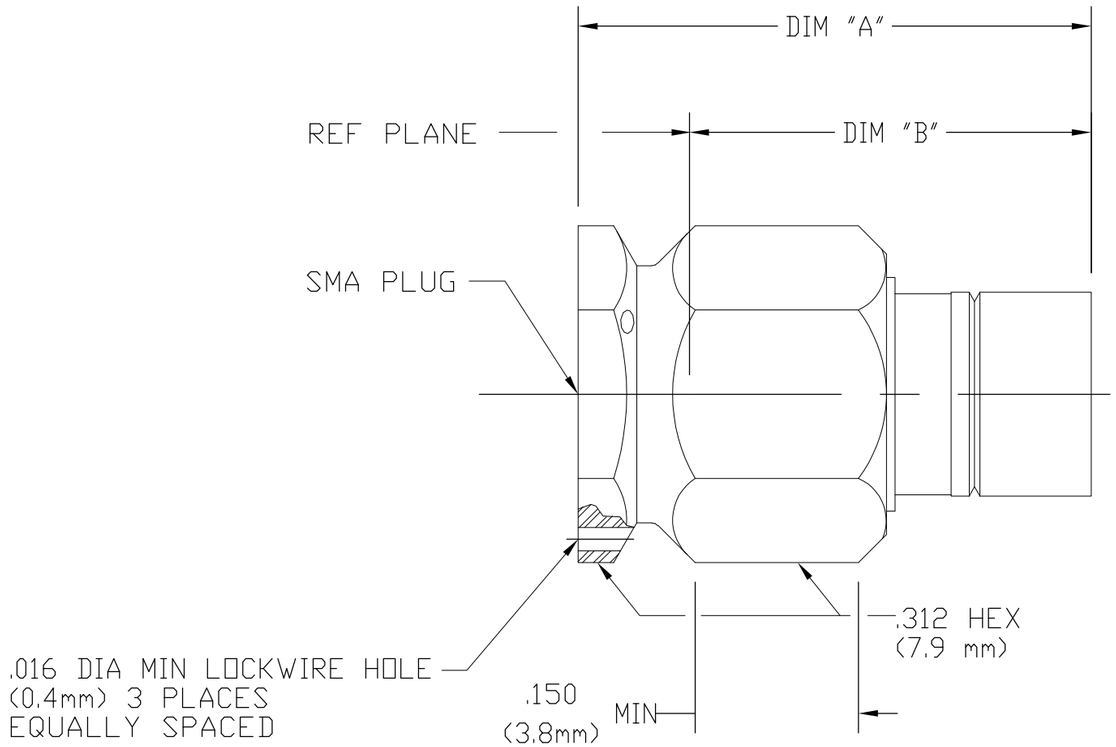

NOTES:

1. DESIGNED FOR USE WITH .141 DIA (RG 402/U) SEMI-RIGID CABLE
2. CAPTURED CENTER CONTACT
3. PICTORIAL VIEW IS AFTER CRIMPING
4. MIN STRAIGHT CABLE LENGTH: .287
5. IT IS SUGGESTED TO BEND CABLE PRIOR TO CRIMPING
6. CRIMP BUSHING MAY BE PACKAGED UNASSEMBLED. ORIENT GROOVE AS SHOWN.

COMPONENT	MATERIAL	FINISH
HOUSING COUPLING NUT BUSHING	STAINLESS STEEL PER ASTM-A484 AND ASTM-A582, TYPE 303	PASSIVATE PER ASTM-A380
DIELECTRIC	TFE FLUOROCARBON PER MIL-P-19468 AND FED SPEC L-P-403	N/A
CENTER CONTACT	BERYLLIUM COPPER PER QQ-C-530,ALLOY 173	GOLD PLATE PER MIL-G-45204 OVER COPPER PLATE PER MIL-C-14550
RETAINING RING	BERYLLIUM COPPER PER QQ-C-533	N/A
GASKET	SILICONE RUBBER PER ZZ-R-765	N/A

BEFORE CRIMPING	.664 REF (16.9 mm)	.550 REF (14.0 mm)
AFTER CRIMPING	.568 MAX (14.4 mm)	.441 REF (11.2 mm)
	DIM "A"	DIM "B"

CABLE ENTRY DIAMETER MINIMUM	
HOUSING	.143
CONTACT	.037

THIS DRAWING IS A CONTROLLED DOCUMENT.

DIMENSIONS: INCHES

TOLERANCES UNLESS OTHERWISE SPECIFIED:

0 PLC	± –
1 PLC	± –
2 PLC	± –
3 PLC	± .005
4 PLC	± –
ANGLES	± –

MATERIAL: SEE TABLE

FINISH: SEE TABLE

DWN	P. YEAGER	10DEC2012
CHK	D. WILSON	11DEC12
APVD	D. WILSON	11DEC12
PRODUCT SPEC	—	
APPLICATION SPEC	—	
WEIGHT	—	

TE Connectivity

NAME: SMA STRAIGHT CABLE PLUG SOLDERLESS COMPRESSION CRIMP ATTACHMENT (M39012-79-3208)

SIZE	CAGE CODE	DRAWING NO	RESTRICTED TO
A3	00779	C-1050794	—

CUSTOMER DRAWING | SCALE 6:1 | SHEET 1 OF 1 | REV A

1470-19 (3/11)