THIS DRAWING IS UNPUBLISHED. RELEASED FOR PUBLICATION -,- .
© COPYRIGHT - By - ALL RIGHTS RESERVED.

LOC	DIST
AF	50

REVISIONS

P	LTR	DESCRIPTION	DATE	DWN	APVD
	C	REVISED PER ECR-12-013518	26NOV2012	KH	PD

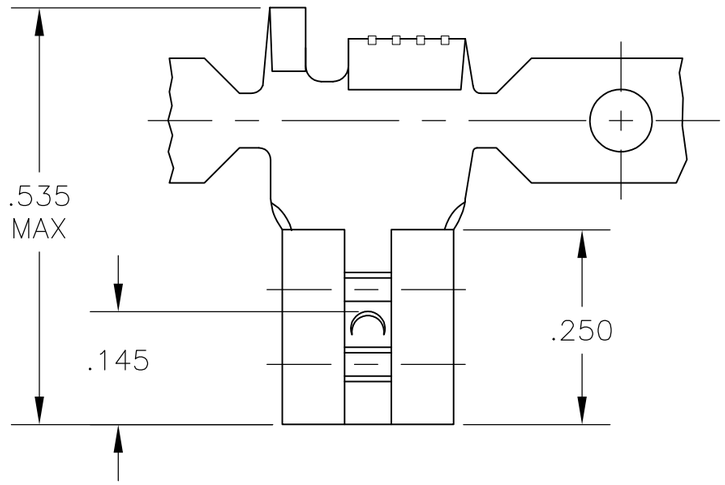

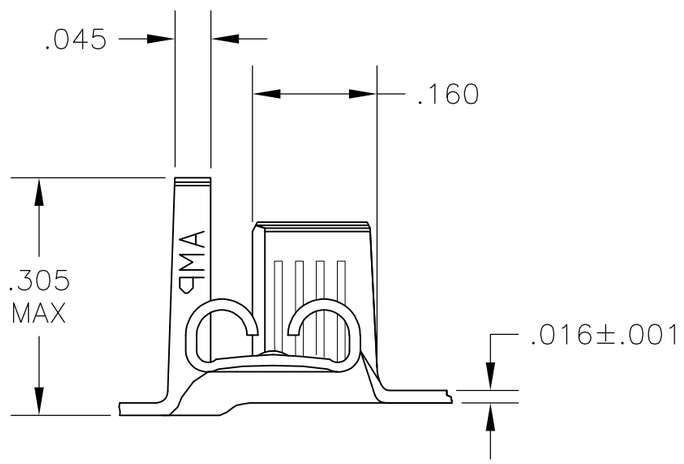

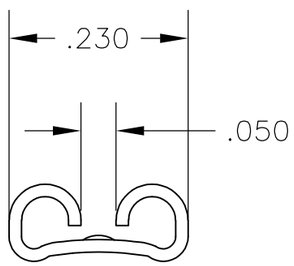

1 CONTINUOUS STRIP ON REELS

2 FEED IS .650±.005

3 ACCEPTS WIRE SIZE #18-#14 AWG

4 INSULATION RANGE IS .075-.155 DIA

5 MATING TAB THK IS .020±.001

6 PRELIMINARY - NO FOR PRODUCTION

7 PREPRODUCTION - FASR REQUIRED

FINISH	PART NO
TIN	7 1742370-2
-	6 1742370-1

THIS DRAWING IS A CONTROLLED DOCUMENT.

DIMENSIONS: INCHES

TOLERANCES UNLESS OTHERWISE SPECIFIED:

0 PLC	± -
1 PLC	± -
2 PLC	± -
3 PLC	± .010
4 PLC	± -
ANGLES	± 5°

MATERIAL: BRASS

FINISH: SEE TABLE

DWN	jr ruth	13OCT05
CHK	P DESANTIS	13OCT05
APVD	P DESANTIS	13OCT05
PRODUCT SPEC	—	
APPLICATION SPEC	—	
WEIGHT	—	

TE Connectivity

NAME: RECEPTACLE, FASTON, .187 SERIES

SIZE	CAGE CODE	DRAWING NO	RESTRICTED TO
A3	00779	C-1742370	—

CUSTOMER DRAWING

SCALE	SHEET	REV
5:1	1 OF 1	C