THIS DRAWING IS UNPUBLISHED. RELEASED FOR PUBLICATION -,- .
© COPYRIGHT - By - ALL RIGHTS RESERVED.

LOC	DIST
H	—

REVISIONS

P	LTR	DESCRIPTION	DATE	DWN	APVD
	D	REVISED PER ECO-13-010456	25JUN2013	SY	FY

CONNECTOR ASSEMBLY
EXEMPLARY LOADED

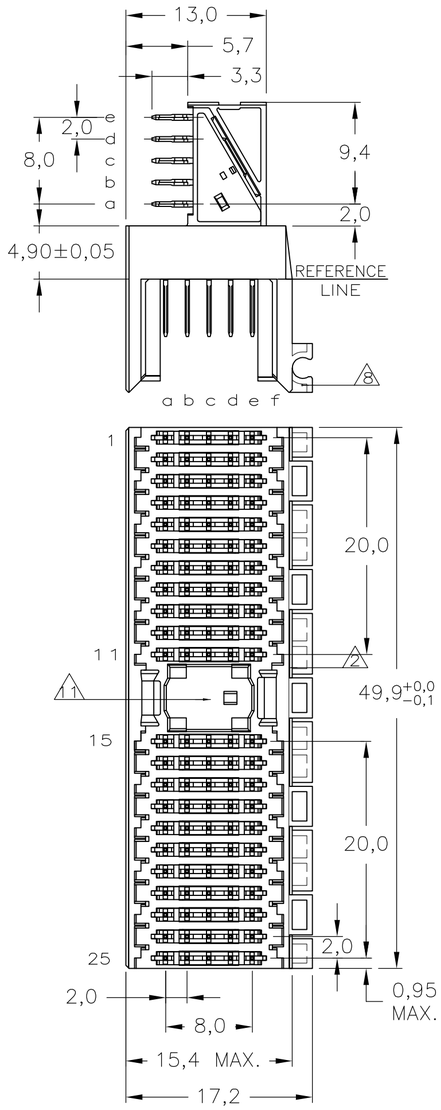

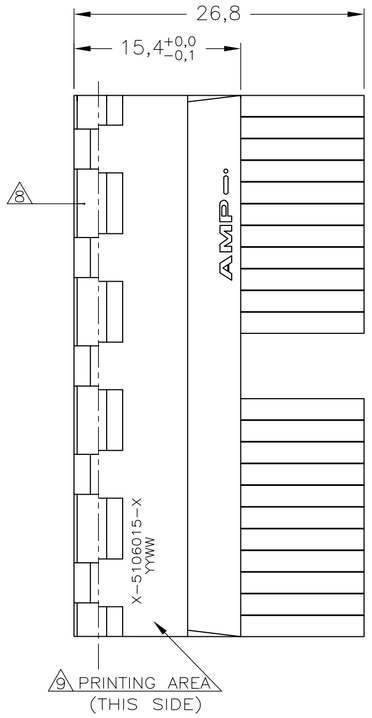

CONTACT DIMENSIONS

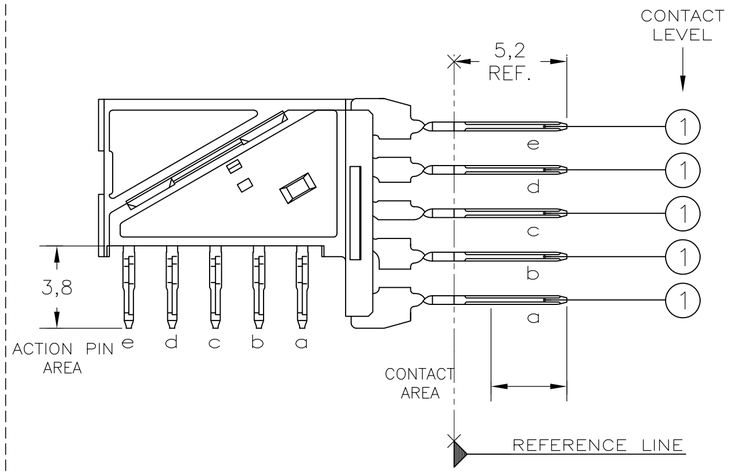

RECOMMENDED PCB-HOLE LAY-OUT
COMPONENT SIDE SHOWN

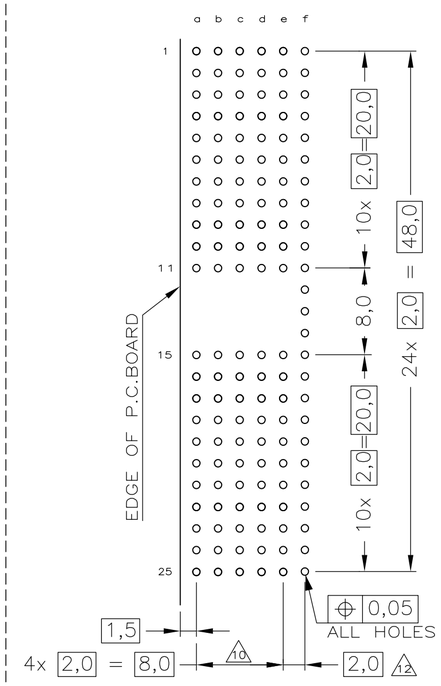

P.C.B. HOLE DIM. ACTION PIN
FOR DETAILS SEE
APPLICATION SPECIFICATION

CONTACT LAYOUT

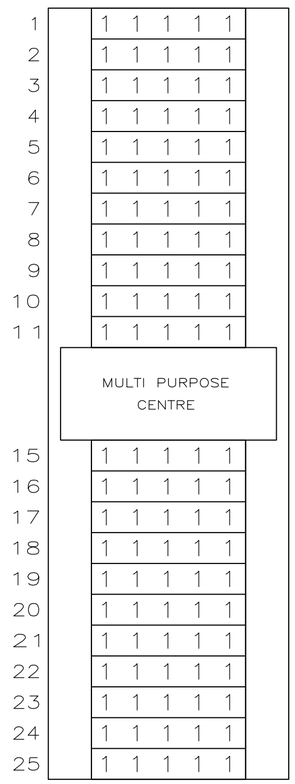

5106015

NOTES:

1 MATERIAL HOUSING : GREY GLASSFILLED POLYESTER
UL-RATING V0
CONTACT : PHOSPHORBRONZE

2 GENERAL PLATING SPECIFICATION: UNDERPLATING (ENTIRE CONTACT): 1,27µm NICKEL MIN. AND ACTION PIN: 0,5µm TIN MIN. FOR PLATING OF MATING SURFACES SEE APPLICABLE SPECIFICATION REFERENCE FOR EACH DASH NUMBER.

3 CONFORMS TO ALL TESTING ACCORDING IEC 61076-4-101 PERFORMANCE LEVEL 2.

4 CONFORMS TO ALL TESTING ACCORDING IEC 61076-4-101 PERFORMANCE LEVEL 1.

5 CONNECTOR TESTED AND QUALIFIED AGAINST TELCORDIA GR-1217-CORE QUALITY LEVEL III, CENTRAL OFFICE APPLICATIONS.

6 CONNECTOR TESTED AND QUALIFIED AGAINST TELCORDIA GR-1217-CORE QUALITY LEVEL III, UNCONTROLLED ENVIRONMENT APPLICATIONS.

7 CONNECTOR LUBRICATED WITH TELCORDIA GR-1217-CORE APPROVED LUBRICANT.

8 CONNECTOR ASSEMBLY WITH LATCH HINGE FOR CABLE CONNECTOR.

9 CONNECTOR MARKED WITH PARTNUMBER AND DATECODE

10 PLATED-THROUGH HOLES AT 2x2mm SQUARE GRID.

11 AREA FOR KEYING PART (BASIC PART NUMBER 100525).

12 HOLES IN ROW f FOR POSSIBLE FUTURE USE OF GROUND RETURN SHIELDS. (NOT YET TOOLED)

13 0.76um MIN. GOLD PLATING AT MATING SURFACE

CONSERVATION TREATMENT	CONTACT FINISH	PART NUMBER
N	2 3 13	3-5106015-0
Y 7	2 6	1-5106015-9
N	2	1-5106015-1 8
Y 7	2 5	5106015-9
N	2 4	5106015-4
N	2 3	5106015-1

THIS DRAWING IS A CONTROLLED DOCUMENT.

DIMENSIONS: mm

TOLERANCES UNLESS OTHERWISE SPECIFIED:
0 PLC ± –
1 PLC ± –
2 PLC ± –
3 PLC ± –
4 PLC ± –
ANGLES ± –
±0.2

MATERIAL –
FINISH –

DWN	K.N.KIRAN	12AUG2004
CHK	B. MOOIJ	23SEP2004
APVD	B. MOOIJ	23SEP2004
PRODUCT SPEC	108-19082	
APPLICATION SPEC	114-19029	
WEIGHT	–	

TE Connectivity

NAME
Z-PACK 2mm HM TYPE A
110 POS. RIGHT ANGLE MALE
CONNECTOR ASSEMBLY

SIZE	CAGE CODE	DRAWING NO	RESTRICTED TO
A2	00779	C-5106015	—

CUSTOMER DRAWING | SCALE 5:1 | SHEET 1 OF 1 | REV D