THIS DRAWING IS UNPUBLISHED. RELEASED FOR PUBLICATION ,19 .
© COPYRIGHT 19 BY AMP INCORPORATED. ALL RIGHTS RESERVED.

LOC J DIST -

REVISIONS 変更

P	LTR	DESCRIPTION	ECN	DATE	DWN	APVD
	0	作成 RELEASED	FJ00-1876-98	30SEP98	E.S	M.T

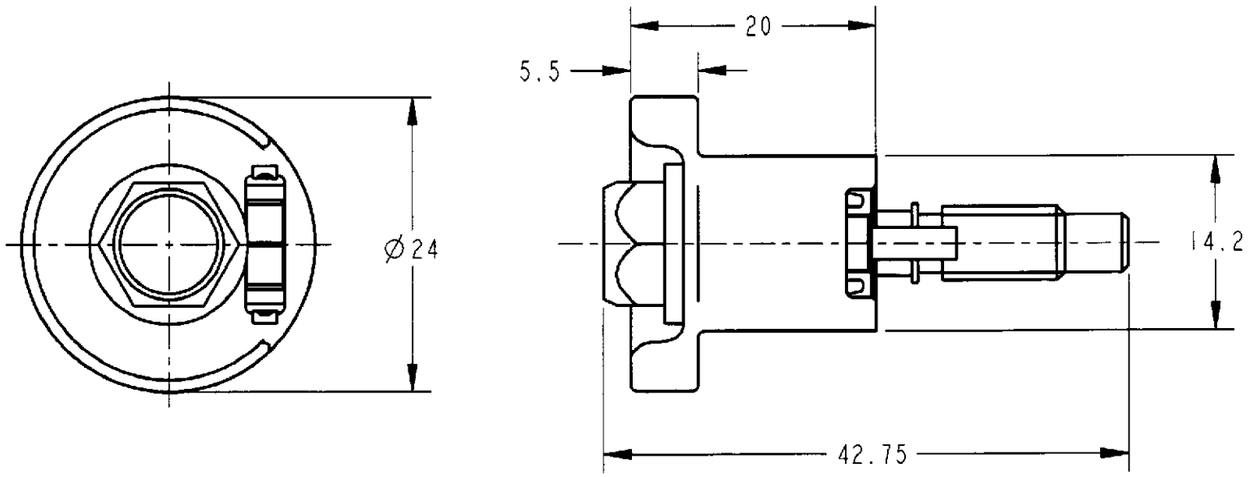

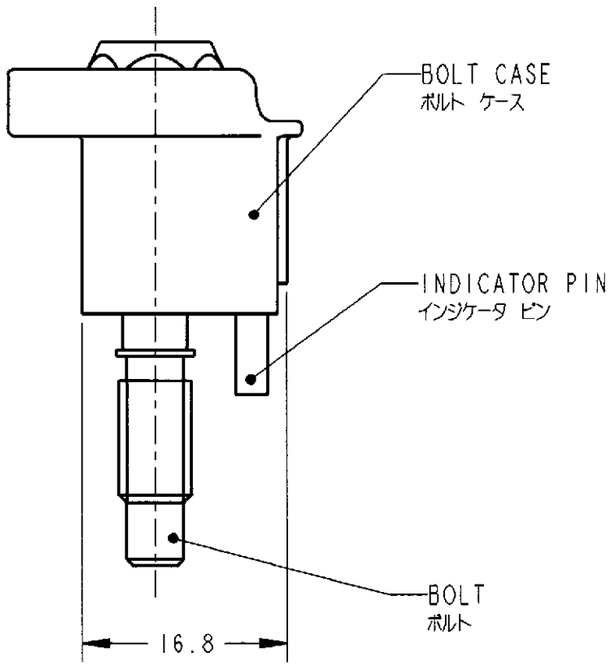

1.PARTS NUMBER OF APPLICABLE PLUG HOUSING ; SEE TABLE 1

1.適用プラグハウジング型番：表1参照

TABLE 1

NO.	PARTS NUMBER 型番	NAME 名称
1	177698-1	48POSITION PLUG HOUSING ASSEMBLY
2	177699-1	64POSITION PLUG HOUSING ASSEMBLY
3	177700-1	76POSITION PLUG HOUSING ASSEMBLY
4	178080-1	88POSITION PLUG HOUSING ASSEMBLY
5	178081-6	104POSITION PLUG HOUSING ASSEMBLY
6	917937-1	120POSITION PLUG HOUSING ASSEMBLY

PARTS NUMBER 型番	BOLT CASE COLOR ボルトケース 色	INDICATOR PIN COLOR インジケータピン 色
1123473-1	NATURAL 自然色	ORANGE オレンジ 色

THIS DRAWING IS A CONTROLLED DOCUMENT FOR AMP INCORPORATED. IT IS SUBJECT TO CHANGE AND THE CONTROLLING ENGINEERING ORGANIZATION SHOULD BE CONTACTED FOR THE LATEST REVISION.

DIMENSIONS: 単位: 尾 mm

TOLERANCES UNLESS OTHERWISE SPECIFIED: 一般公差 = ± 0.5
0 PLC ±
1 PLC ±0.1
2 PLC ±0.01
3 PLC ±0.001
4 PLC ±0.0001
ANGLES ±-

MATERIAL 材料: BOLT CASE;SPS INDICATOR PIN;PBT BOLT;STEEL

FINISH 仕上: -

DWN E.SASAKI 30SEP98
CHK //
APVD M.TSUKAKOSHI 30SEP98
PRODUCT SPEC 製品規格 108-5402
INSTRUCTION SHEET 取扱説明書 411-5722
WEIGHT 16g

AMP AMP(JAPAN), LTD. Kawasaki, Japan

NAME 名称 BOLT CASE ASSEMBLY SHUTTER TYPE
ボルトケース アッセンブリ シャッタータイプ
インバルメイト コネクタ

SIZE A3 | CAGE CODE 番号 00779 | DRAWING NO C-1123473

CUSTOMER DRAWING | SCALE 尺度 2:1 | SHEET 1 OF 1 | REV 0

/auto2/new/u.a97-0138/u.customer/