THIS DRAWING IS UNPUBLISHED. RELEASED FOR PUBLICATION -,- .
© COPYRIGHT - BY TYCO ELECTRONICS CORPORATION. ALL RIGHTS RESERVED.

LOC	DIST
AD	00

REVISIONS

P	LTR	DESCRIPTION	DATE	DWN	APVD
	A1	REVISED PER ECO-05-012281	25MAY06	SSK	MS
	A2	REVISED PER ECO-09-024927	10NOV09	KK	AEG

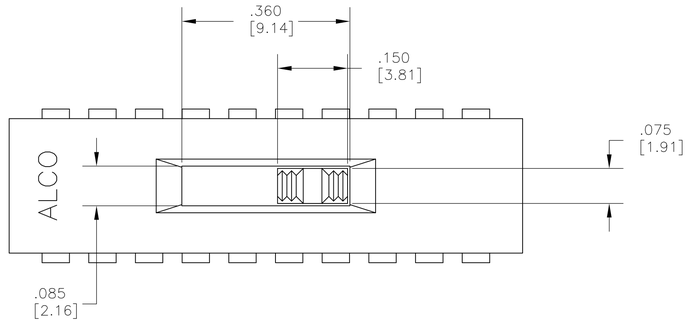

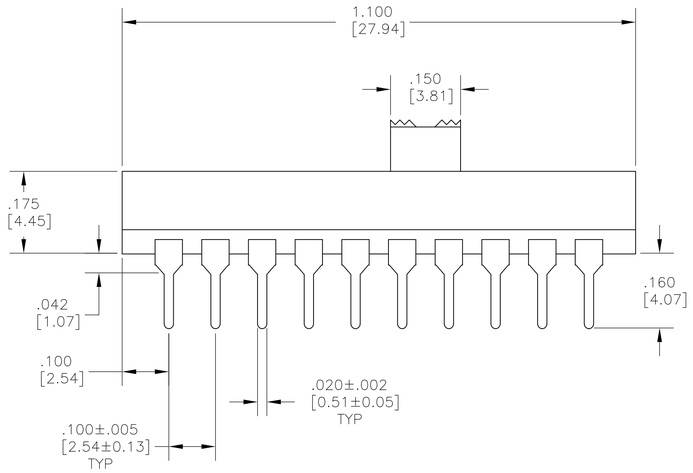

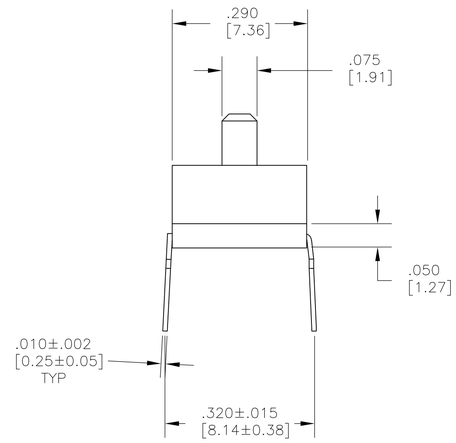

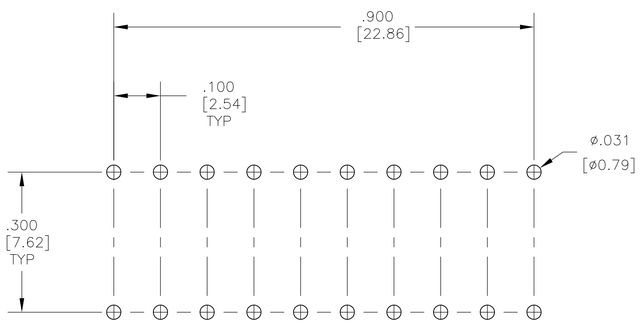

PRINTED CIRCUIT BOARD
HOLE PATTERN

SPECIFICATIONS:

4P3T
MAKE-BEFORE-BREAK

MATERIALS:
BASE/COVER-PCT UL94V-0, BLACK
ACTUATOR-NYLON PA46 UL94V-0, NATURAL
MOVING CONTACT-COPPER ALLOY, SILVER OVER NICKEL
FIXED CONTACT-COPPER ALLOY, SILVER OVER NICKEL
TERMINAL-COPPER ALLOY, TIN/LEAD OVER NICKEL OR TIN OVER NICKEL

ELECTRICAL:

CONTACT RATING, 30 MILLIAMP @ 115V AC PER EIA-448, METHOD 6
CONTACT RESISTANCE, 25 MILLIOHMS MAX @ 100mA 2-4V DC, PER EIA-364-23B, EACH POSITION
INSULATION RESISTANCE, 1000 MEGOHM MIN @ 500V DC, PER EIA-364-21C EACH POSITION
DIELECTRIC STRENGTH, 600V RMS @ SEA LEVEL, PER EIA-364-20B, CONDITION 1, EACH POSITION
LIFE EXPECTANCY, ELECTRICAL, 15,000 CYCLES @ FULL LOAD

MECHANICAL:

ACTUATION FORCE, 800 GRAMS MAX.
ACTUATION TRAVEL, .100±.010
LIFE EXPECTANCY, 15,000 CYCLES

ENVIRONMENTAL:

OPERATING TEMPERATURE, -40° TO +80°C, PER EIA 448, METHOD 10
STORAGE TEMPERATURE, -40° TO +80°C
HUMIDITY AND TEMPERATURE CYCLING PER EIA-364-31B, METHOD III
SOLDERABILITY, PER EIA-364-52, CLASS 2, CATEGORY 1, 95% MINIMUM COVERAGE
RESISTANCE TO SOLDER HEAT, PER 109-202, CONDITION B

NOTES:

1. SWITCH TO BE SUPPLIED WITH CLOSED END COVERS
2. PACKAGING LABEL TO BE ASE71016/61-0176
3. PARTS TO BE PACKAGED IN TUBES WITH 19 SWITCHES PER TUBE
4. CUSTOMER-TELLABS
5. ALL MATERIALS AND FINISHES SHALL COMPLY WITH EU DIRECTIVE 2002/95/EC OF 27JAN2003 (ROHS)

6 OBSOLETE PARTS: OBSOLETE CIS STREAMLINING PER D.RENAUD/D.SINISI

	NOTES	T&B P/N	TYCO P/N
	5	ASE7101604	1825463-1
6 SUPERSEDED		ASE71016	~~4-1437581-2~~

THIS DRAWING IS A CONTROLLED DOCUMENT.

DIMENSIONS: INCHES [mm]

TOLERANCES UNLESS OTHERWISE SPECIFIED:
0 PLC ± -
1 PLC ± -
2 PLC ± -
3 PLC ± .010
4 PLC ± -
ANGLES ± 1°

MATERIAL -
FINISH -

DWN 15FEB05 B.S. VISWESWARA
CHK M. SARVER
APVD M. SARVER
PRODUCT SPEC —
APPLICATION SPEC —
WEIGHT —

tyco Electronics
Tyco Electronics Corporation
Harrisburg, PA 17105-3608

NAME AUTO SLIDE SWITCH, ADE43 SPECIAL

SIZE	CAGE CODE	DRAWING NO	RESTRICTED TO
A1	00779	C-4-1437581-2	—

CUSTOMER DRAWING | SCALE 6:1 | SHEET 1 OF 1 | REV A2