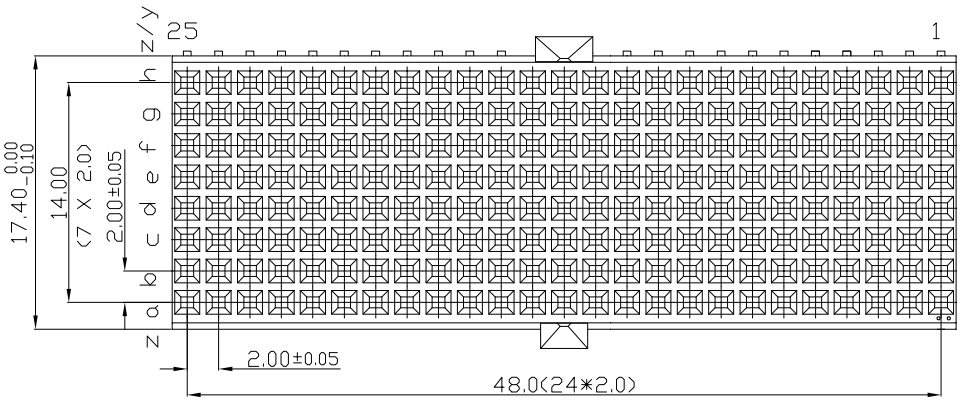

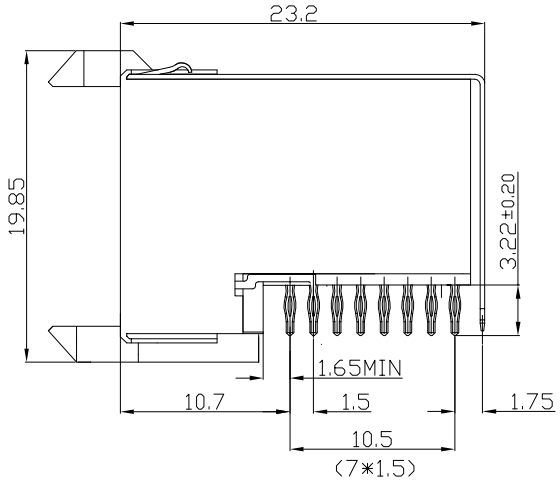

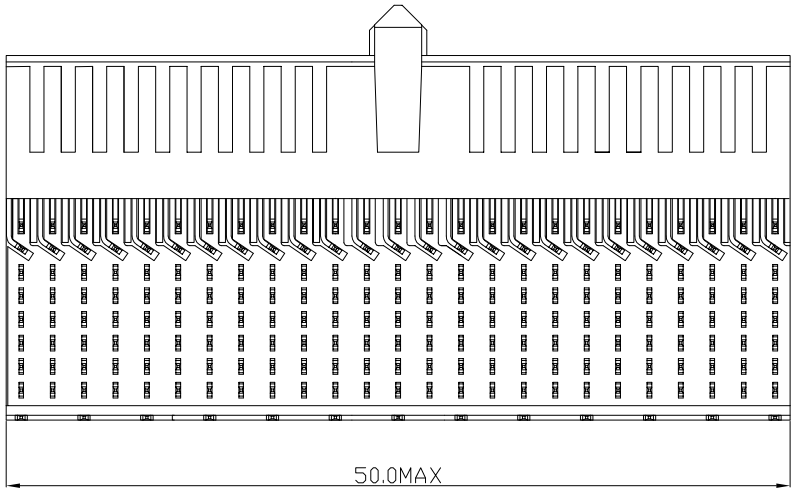

PERFORMANCE CHARACTERISTICS

CURRENT RATING 1.5A AT 20°C (FULLY LOADED)
1 A AT 70°C (FULLY LOADED)

RATED VOLTAGE : 500 V AC (CONT /CONT)

OPERATING TEMPERATURE : -55°C TO 125°C

CONTACT RESISTANCE 20 MΩ MAX

INSERTION FORCE : 0.75N MAX/CONT

EXTRACTION FORCE : 0.15N MIN/CONT

INSULATION RESISTANCE : 10^4 MΩ MIN

NOTES 1. LEAD FREE INDICATOR :LF=LEAD FREE
PERFORMANCE LEVEL INDICATIOR (REF DWG NO.BSC .201844.003)

2. THIS PRODUCT IS CSA APPROVED.
THIS PRODUCT IS UL RECOGNIZED.

3. FOR RECOMMENDED PTH DIMENSIONS REFER DRAWING : BS.A.201572.001

4. THIS PRODUCT (LF) MEETS EUROPEAN UNION DIRECTIVES AND OTHER COUNTRY REGULATIONS AS DESCRIBED IN GS-22-008

LAY-OUT
P.C.B.- HOLE

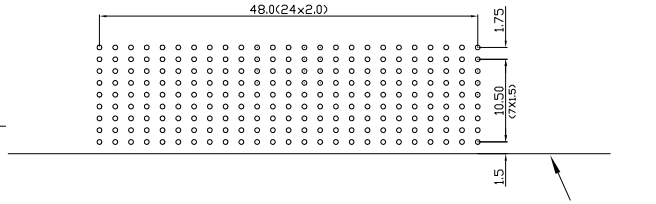

rev	ecn no	dr	date
A	CONVERSION REVISION 01	KN	14-09-01
B	DG07-0362	Kason	05-09-07
C	DG10-0110	NZ	08-09-10

FCI www.fciconnect.com			tolerance 1DEC ±0.2 1DEC 2DEC ±0.1 2DEC ANGLES ±1° HOEKEN	projection	MM
Dr	R.MOONS	14-11-00	Product family MILLIPICS	size A4	Scale 3/1
Eng			Spec ref		
Chr			Material	ECN	
Appr					
title	MPACS 8+2R RA RCP CONN TYPE DE/UPPER SHIELDED			dwg no BS,C ,202260,025	Rev. C
catalog no	HM2R95PA8108----			CUMSTOMER	sheet 1 of 1

Tous droits strictement reserves. Reproduction ou communication a des tiers interdite sous quelque forme que ce soit sans autorisation ecrite du propietaire. Propriete de c FCI. Droits de reproduction FCI.

All rights strictly reserved. Reproduction or issue to third parties in any form whatever is not permitted without written authority from the proprietor. Property of FCI. Copyright FCI.

PDM: Rev:C STATUS:Released Printed: Mar 15, 2011