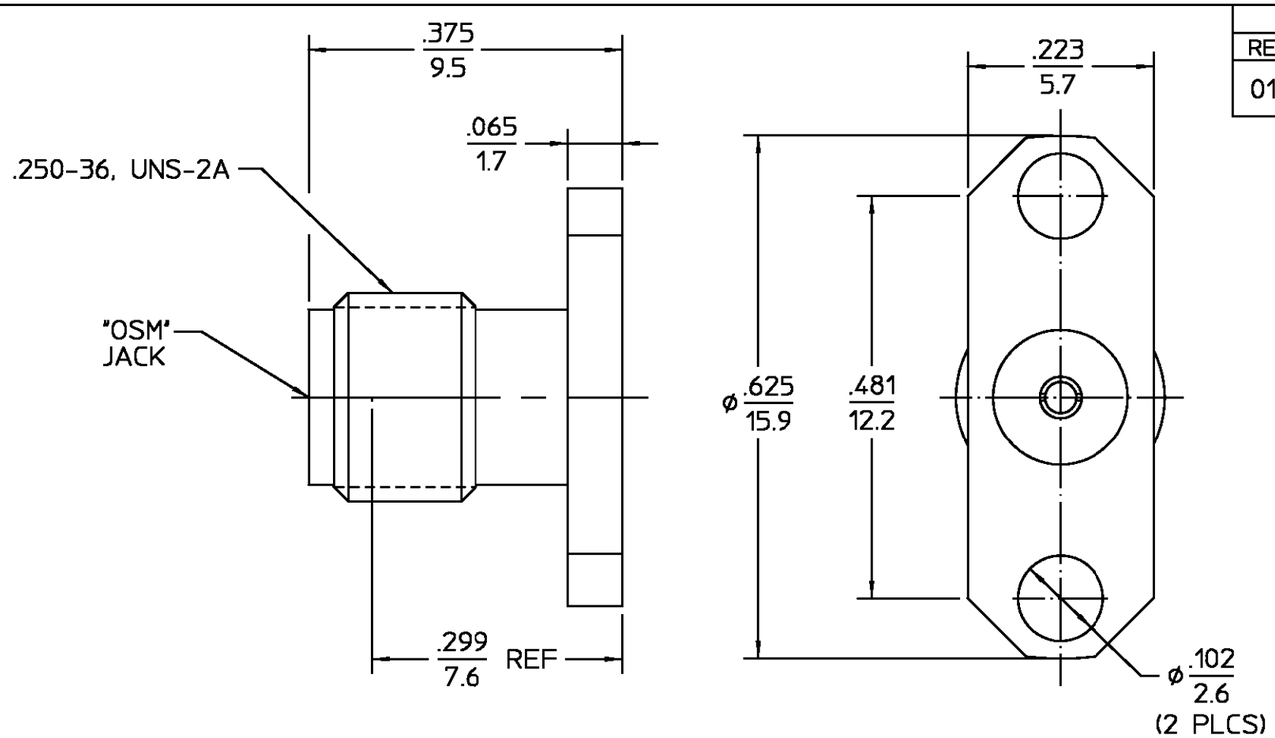

REVISIONS			
REV	DESCRIPTION	DATE	APPROVED
01_1	RELEASED	3/10/97	

ELECTRICAL	
Nominal Impedance (Ohms)	50
Frequency Range (GHz) DC to	18
Volt Rating (VRMS MAX)	
@ Sea Level	335
VSWR	1.05 + .005 f(GHz)
Insertion Loss (dB MAX)	.2dB
RF Leakage (dB MIN)	90dB
Corona, 70,000 Ft (VRMS MIN)	250
Dielectric Withstanding Voltage	
(VRMS MIN) @ Sea Level	1,000
Contact Resistance (Milliohms MAX)	
Center Contact	3.0
Outer Contact	2.0
Cable to Housing	N/A
RF High Potential @ Sea Level	
(VRMS MIN @ 5 MHz)	670
I.R.(Megohms MIN)	10,000

MECHANICAL	
Interface Dimensions MIL-STD-348A,	
Fig.	310-2
Recommended Mating	
Torque	7-10 IN-LBS
Mating Characteristics:	
Insertion (MAX Lbs)	4.0
Withdrawal (MIN Oz)	1.0
Force to Engage and	
Disengage (In-Lbs MAX)	2.0
Center Contact Captivation	
Axial (Lbs)	6.0
Radial (In-Oz)	N/A
Cable Retention	
Axial Force (Lbs)	N/A
Torque (In-Oz)	N/A
Weight (Grams)	TBD

ENVIRONMENTAL
Temperature Rating -65 TO +165°C
Vibration MIL-STD-202, Method 204, Condition B
Shock MIL-STD-202, Method 213, Condition I
Thermal Shock MIL-STD-202, Method 107, Condition B, Except High Temp +85°C
Moisture Resistance MIL-STD-202, Method 106
Corrosion - MIL-STD-202, Method 101, Condition B, 5% salt spray

.XXX = in
XX.X = mm (REF)

COMPONENT	MATERIAL	FINISH
HOUSING	STAINLESS STEEL PER ASTM-A484 AND ASTM-A582, TYPE 303	PASSIVATE PER QQ-P-35
DIELECTRIC	PTFE FLUOROCARBON PER ASTM-D-1457	N/A
CENTER CONTACT	BERYLLIUM COPPER PER ASTM-B-196 OR ASTM-B-197, ALLOY C17300, CONDITION H	GOLD PLATE PER MIL-G-45204

UNLESS OTHERWISE SPECIFIED DIMENSIONS ARE IN INCHES

FRAC. ± 1/64 DEC. ±.005 ANGLES ± 1°

DRAWN BY TIM WAGNER DATE 10/17/97
CHECKED BY
APP'D BY

AMP

AMP Incorporated
140 Fourth Avenue
Waltham, MA 02451-7599

These drawings and specifications are the property of M/A COM Interconnect Div. and shall not be reproduced or copied or used in whole or in part as the basis for the manufacture or sale o f item(s) without written permission.

USE ASS'Y PROCEDURE

NO. A.P. N/A

TITLE "SMA" STRAIGHT 2 HOLE FLG MOUNT JACK ACCEPT .036 DIA PIN

SIZE	CODE IDENT NO.		REV
B	26805	2052-3359-02	01_1
SCALE 6:1			SHEET 1 OF 1

CUSTOMER DRAWING

AMP PART # 1052646-1
SHEET 1 OF 1 REV A