THIS DRAWING IS UNPUBLISHED. RELEASED FOR PUBLICATION 20
© COPYRIGHT 20 BY TYCO ELECTRONICS CORPORATION. ALL RIGHTS RESERVED.

PART NUMBER	REV	FIRST USED	POWER UNIT	FEED TYPE	DESCRIPTION
1852442-1	G	122500-1	LEADMAKER	POST FEED	CUTS CARRIER
1852442-2	G	565435-5	BENCH MODEL K	PRE FEED	CUTS CARRIER
1852442-3	G	354500-1	BENCH MODEL G	PRE FEED	CUTS CARRIER
1852442-6	G	122500-1	LEADMAKER	POST FEED	CONTINUOUS CARRIER
7-1852442-7	G	-	-	-	SPARE PARTS

1. RECOMMENDED SPARE PARTS
2. GREASE LIGHTLY
3. GUARD MUST BE IN PLACE WHEN OPERATING APPLICATOR IN A BENCH MACHINE
4. STRIPPER (ITEM 22) IS LOCATED BETWEEN INSULATION CRIMPER (ITEM 3) AND SHEAR DEPRESSOR (ITEM 5).

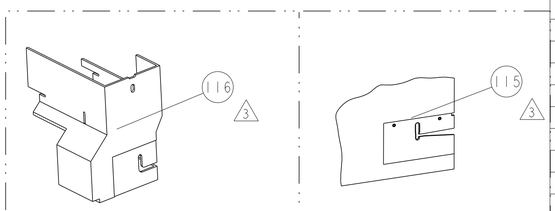

AMP-O-LECTRIC TERM GUARD | G TERMINATOR GUARD

TERMINAL NAME: AMPLIVAR WIRE PIN 500-1400 CMA

TE PN	-
1742451	-
-	-
-	-
-	-
-	-
-	-
-	-
-	-
-	-
WIRE STRIP LENGTH .259 -.274	TERM APPL SPEC NONE

TE TERMINAL - TE CRIMP SPECS

PAD LTR	PRIMARY CRIMP HEIGHT	SECONDARY CRIMP HEIGHT	WIRE SIZE
A	.062±.002[1.57±0.05mm]	.052±.002[1.32±0.05mm]	19.5 MAG
B	.055±.002[1.40±0.05mm]	.045±.002[1.14±0.05mm]	23 MAG
C		-	-
D		-	-

CRIMP	SIZE	TYPE	RANGE
WIRE	.062 [1.57mm]	O	23-19 MAG
INSUL	.100 [2.54mm]	O	-

FEED	APPLICATOR INSTRUCTIONS	SET UP GAGE
.410	408-8040	458637-1

LOC	DIST
A	66

REVISIONS

P	LTR	DESCRIPTION	DATE	DWN	APVD
	F	ECR-11-013044	22JUN2011	RK	GB
	G	ECR-11-026055	29DEC2011	BH	BH

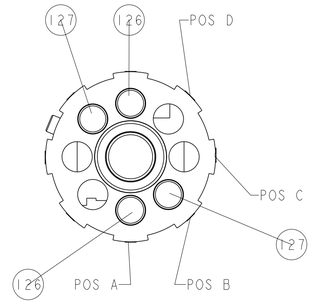

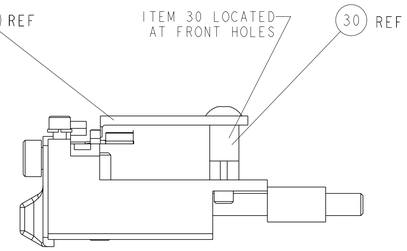

FEED TRACK POSITION

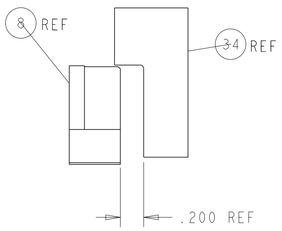

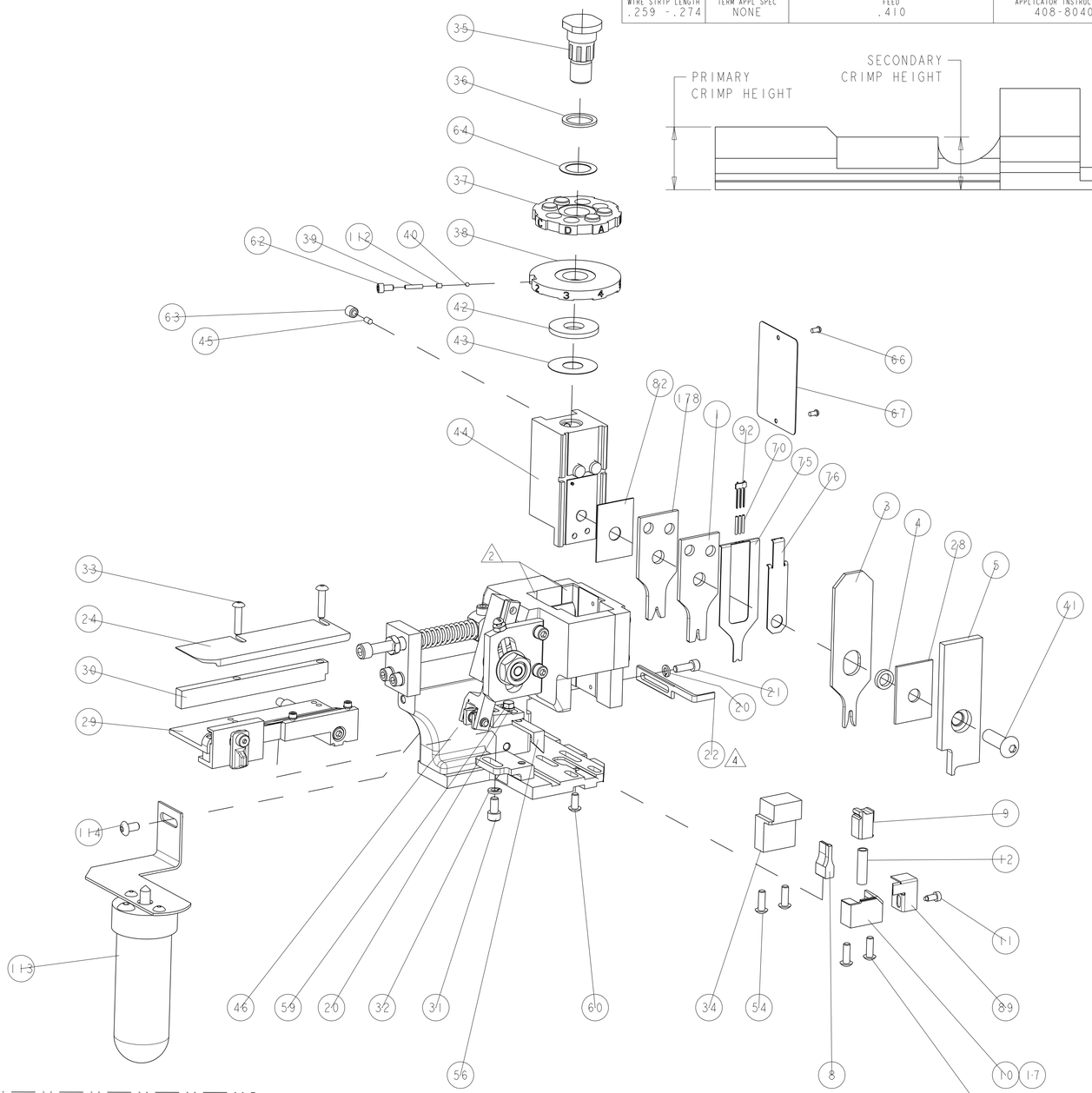

1	1	1	1	1	-	1633723-9	CRIMPER, WIRE O	178
	-	2	2	2	2	-	4-354779-5	PIN, WIRE DISC, .3215	127
	-	2	2	2	2	-	2-354779-6	PIN, WIRE DISC, .3120	126
3	-	-	-	REF	-	..	455749-1	GUARD WINDOW	116
3	-	-	REF	-	-	..	679532-1	INSERT, GUARD	115
	-	-	-	1	-	-	2-21002-6	SCR, BTN SKT HD CAP 10-32 X .375	114
	-	-	-	1	-	..	1-465184-0	LUBRICATOR ASSY	113
	-	1	1	1	1	-	690603-1	SPRING ASSIST AMP-O-MATOR APPLICATOR	112
	-	1	1	1	1	-	1424350-1	HOLDER, PIN, WIRED	92
	-	1	1	1	1	-	1-21002-7	SCR, BTN SKT HD CAP 6-32 X .375	91
	-	1	1	1	1	-	318563-1	GUARD, FRONT CHIP	89
	-	1	1	1	1	-	455888-6	SPACER, CRIMPER	82
	-	1	1	1	1	-	1490524-1	DEPRESSOR, SPACER	76
	-	1	1	1	1	-	1490525-3	DEPRESSOR, WIRE	75
	-	1	1	1	1	-	4088040	SF APPL INST 408-8040	72
	-	1	1	1	1	-	217238-1	GENERAL INSTRUCTION PKG	71
	-	3	3	3	3	-	2-23147-2	SPRING, COMPRESSION	70
	-	1	1	1	1	-	461264-1	PLATE, IDENTIFICATION	67
	-	2	2	2	2	-	21017-2	SCREW, DRIVE	66
	-	1	1	1	1	-	986950-1	WASHER, FLAT PRECISION	64
	-	1	1	1	1	-	21009-2	SCR, SET, SELF LOCKING 1/4-20 X .250	63
	-	1	1	1	1	-	23030-1	SCR, SKT HD CAP 6-32 x .25	62
	-	1	1	1	1	-	22733-8	SCR, BHSC, SELF-LOCKING, 8-32 X .375	60
	-	1	1	1	1	-	2-22603-0	SCR, HEX HD CAP 8-32 X .312	59
	-	1	1	1	1	-	458537-2	PAWL, FEED	56
	-	4	4	4	4	-	2-21002-2	SCR, BTN SKT HD CAP 8-32 X .500	54
	-	-	1	-	-	..	690602-6	CAM, PRE FEED, 1 5/8	49
	-	-	-	1	-	..	690602-5	CAM, PRE FEED, 1 1/8	48
	-	1	-	-	1	-	690501-4	CAM, POST-FEED 1 5/8	47
	-	1	1	1	1	-	459456-1	APPL. BASIC SUB ASSY (SIDE WISE MQCA)	46
	-	1	1	1	1	-	690191-1	PLUG,NYLON	45
	-	1	1	1	1	-	2-819307-8	RAM, SIDE FEED	44
	-	1	1	1	1	-	690125-1	SHIM SUB-ASSY	43
	-	1	1	1	1	-	690124-1	WASHER, RAM (.115)	42
	-	1	1	1	1	-	7-21002-9	SCR, BTN SKT HD CAP 5/16-24 X 1.00	41
	-	1	1	1	1	-	23241-6	BALL, STEEL	40
	-	1	1	1	1	-	690170-1	SPRING, COMPRESSION	39
	-	1	1	1	1	-	690142-1	DISC, INSULATION	38
	-	1	1	1	1	-	354777-1	WIRE DISC, ASSEMBLY	37
	-	1	1	1	1	-	22480-5	SPRING, COMPRESSION	36
	-	1	1	1	1	-	690212-1	POST, RAM	35
	-	1	1	1	1	-	469465-3	STOP, WIRE	34
	-	2	2	2	2	-	2-21002-4	SCR, BTN SKT HD CAP 8-32 X .750	33
	-	1	1	1	1	-	21024-5	WASHER, SPRG LOCK, REG NO 10	32
	-	1	1	1	1	-	3-21000-4	SCR, SKT HD CAP 10-32 X .375	31
	-	1	1	1	1	-	1320908-4	SPACER, STRIP GUIDE	30
	-	1	1	1	1	-	1633091-1	ASSEMBLY, STRIP GUIDE	29
	-	1	1	1	1	-	1-455888-5	SPACER, CRIMPER	28
	-	1	1	1	1	-	1320928-1	PLATE, STRIP GUIDE	24
4	-	1	1	1	1	-	690472-6	STRIPPER	22
	-	1	1	1	1	-	2-21000-7	SCR, SKT HD CAP 8-32 X .500	21
	-	2	2	2	2	-	21024-4	WASHER, SPRG LOCK, REG NO 8	20
1	-	1	-	-	-	-	679625-2	SHEAR HOLDER, FRONT (NO CUT)	17
	-	1	1	1	1	-	3-22280-3	SPRING, COMPRESSION	12
	-	1	1	1	1	-	690461-2	STOP, SHEAR	11
1	-	-	1	1	1	-	1-690459-0	SHEAR HOLDER, FRONT	10
1	-	1	1	1	1	-	462006-6	FLOATING SHEAR, FRONT	9
1	1	1	1	1	1	-	3-1633382-7	ANVIL, COMBINATION	8
	-	1	1	1	1	-	3-455889-8	DEPRESSOR, SHEAR	5
	-	1	1	1	1	-	238011-4	BLOCK, CRIMPER SPACER	4
1	1	1	1	1	1	-	9-456135-6	CRIMPER, INSULATION O PREMIUM	3
	-	-	-	-	-	..	-	-	2
1	1	1	1	1	1	-	6-459492-1	CRIMPER, WIRE O	1
	-77	-6	-3	-2	-1	U/M	PART NO	DESCRIPTION	ITEM NO

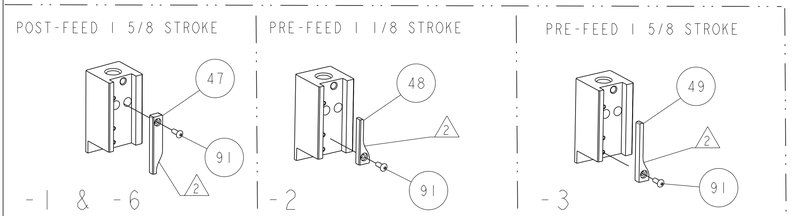

THIS DRAWING IS A CONTROLLED DOCUMENT FOR TYCO ELECTRONICS CORPORATION. IT IS SUBJECT TO CHANGE AND THE CONTROLLING ENGINEERING ORGANIZATION SHOULD BE CONTACTED FOR THE LATEST REVISION.

DWN	B.HIGMAN	07MAR2007
CHK	B.HIGMAN	07MAR2007
APVD	T.ELBIN	07MAR2007

TE Connectivity
Harrisburg, PA 17105-3608

NAME: SIDE FEED HDM APPLICATOR

DIMENSIONS: INCHES

TOLERANCES UNLESS OTHERWISE SPECIFIED:
0 PLC ±-
1 PLC ±0.1
2 PLC ±0.01
3 PLC ±0.001
4 PLC ±0.0001
ANGLES ±-

PRODUCT SPEC -
APPLICATION SPEC -
MATERIAL - -
FINISH - -
WEIGHT -

SIZE	CAGE CODE	DRAWING NO	RESTRICTED TO
A	00779	C-1852442	-

CUSTOMER ACCESSIBLE PRODUCTION DRAWING | SCALE 3:5 | SHEET 1 OF 1 | REV G

AMP 4805 REV 31MAR2000

Pro/ENGINEER DRAWING

DIMENSIONING AND TOLERANCING PER ASME Y14.5M-2009