Part Number: 63910-8400
Status: Active
Description: T2 Terminator for Crimp Terminal, Female 18-24 AWG Wire

Documents:
RoHS Certificate of Compliance (PDF)

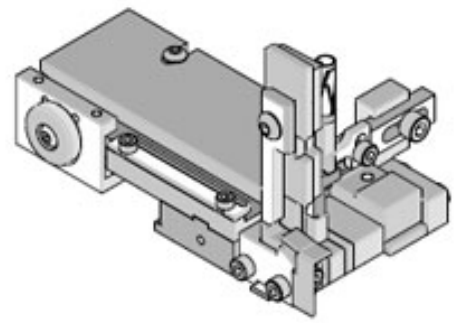

Series
image - Reference only

General

Product Family	Application Tooling
Series	T9999
Comments	See Tooling Specification (PDF) Above
Function	Crimp
Geographic Area	Global
Level of Automation	Manual
More Detailed Tech Information	applicationtooling@molex.com
Product Name	T2
Survey	www.molex.com//review/apptool_survey.html
Tool Type	Terminator
UPC	884982003323

Material Info

Reference - Drawing Numbers

Application Tooling Documents	ATS-639108400, TM-638500090, TM-638500090SP

EU RoHS **China RoHS**
Compliance Status
Not Reviewed
REACH SVHC
Not Reviewed
Low-Halogen Status
Not Reviewed

Need more information on product environmental compliance?

Email productcompliance@molex.com
For a multiple part number RoHS Certificate of Compliance, click here

Please visit the Contact Us section for any non-product compliance questions.

Search Parts in this Series
T9999Series

Use With
MX150L™ Female Terminal 19420

Application Tooling Description	| FAQ Product #
MX150L™ Female Terminal for 18-22 AWG Wire, Tin Plated, Metal Strip Carrier	0194200002
MX150L™ Female Terminal for 18-22 AWG Wire, Gold Plated, Metal Strip Carrier	0194200004