Honeywell

General Purpose

Power Relay

SZR-MY Series

FEATURES

- Small package design
- DPDT has a fine silver contact with 5 A capability
- 4PDT has a gold-plated silver contact with 3 A capability
- High dielectric strength (1,800 Vac)
- High reliability and long life
- Ultra-high sensitivity with quick response time (20 ms max.)
- Options include LED indicator, diode protection, and LED indicator/diode protection
- UL listed, CE certified, CSA certified

TYPICAL APPLICATIONS

- Control panels
- Elevator panels
- Machine tools
- Test equipment

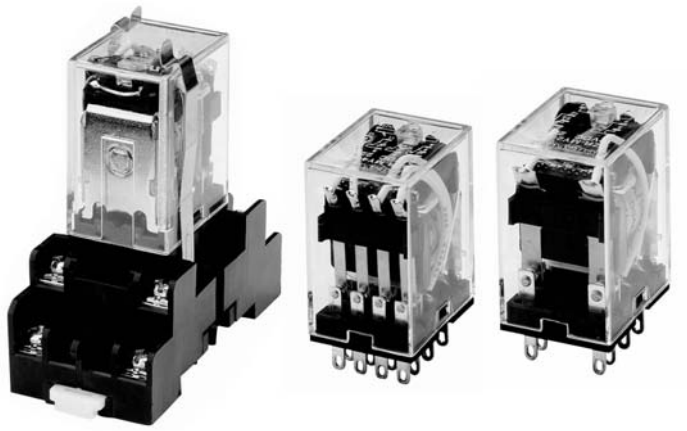

SZR-MY Series general-purpose power relays are designed for a wide range of applications including power as well as logic control for factory machines and control panels.

SZR-MY Series relays have a small package design for multiple application needs. Relays are available in two configurations: DPDT with a 5A load and 4PDT with a 3 A load.

One standard and three options are available: LED indicator, internal surge protection diode, and LED indicator/diode protection. Honeywell's global sales and distribution channels ensure a rapid response and excellent customer service.

⚠ WARNING

PERSONAL INJURY

DO NOT USE these products as safety or emergency stop devices or in any other application where failure of the product could result in personal injury.

Failure to comply with these instructions could result in death or serious injury.

⚠ WARNING

MISUSE OF DOCUMENTATION

- The information presented in this product sheet is for reference only. Do not use this document as a product installation guide.
- Complete installation, operation, and maintenance information is provided in the instructions supplied with each product.

Failure to comply with these instructions could result in death or serious injury.

RELAY MODEL SELECTION GUIDE

Type	Terminal	Contact	Catalog Listing
Standard	Plug-in/Solder	DPDT	**SZR-MY2-1**
		4PDT	**SZR-MY4-1**
	PCB	DPDT	**SZR-MY2-1P**
		4PDT	**SZR-MY4-1P**
LED Indicator	Plug-in/Solder	DPDT	**SZR-MY2-N1**
		4PDT	**SZR-MY4-N1**
DIODE surge suppression		DPDT	**SZR-MY2-D1**
		4PDT	**SZR-MY4-D1**
LED indicator + surge suppression		DPDT	**SZR-MY2-X1**
		4PDT	**SZR-MY4-X1**

SOCKETS – REQUIRED ACCESSORIES

	Din-rail Mounting	Solder Terminal	PCB Terminal
Relay Contact			
DPDT For use with SZR-MY2-1, -N1, -D1, -X1	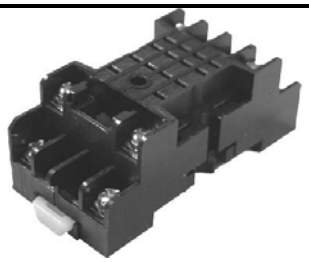 **SZX-SMF-08N**	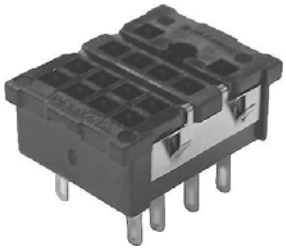 **SZX-SMB-08**	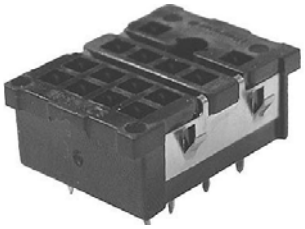 **SZX-SMB-08P**
4PDT For use with SZR-MY4-1, -N1, -D1, -X1	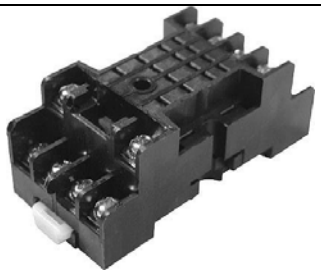 **SZX-SMF-14N**	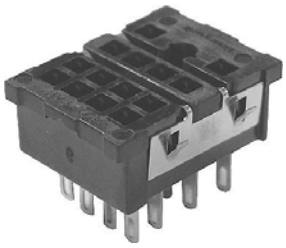 **SZX-SMB-14**	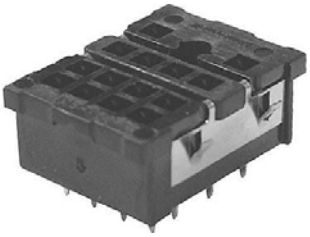 **SZX-SMB-14P**

CONTACT RATINGS

Type	DPDT		4PDT	
Load Ratings	Resistive Load (p.f. = 1)	Inductive load (p.f. = 0.4, L/R = 7 ms)	Resistive Load (p.f. = 1)	Inductive load (p.f. = 0.4, L/R = 7 ms)
Rated load	220 Vac, 5A 24 Vdc, 5A	220 Vac, 2A 24 Vdc, 2A	220 Vac, 3A 24 Vdc, 3A	220 Vac, 0.8 A 24 Vdc, 1.5 A
Carry current	5A		3A	
Max. operating voltage	250 Vac, 125 Vdc		250 Vac, 125 Vdc	
Max. operating current	5 A		3 A	
Max. switching capacity	1,100 VA, 120 W	440 VA, 48 W	660 VA, 72 W	176 VA, 16 W
Min. permissible load	1 mA, 5 Vdc		1 mA, 1 Vdc	

COIL RATINGS

		Rated Current (mA)			Coil Inductance (H)					
	Rated Voltage (V)	50 Hz	60 Hz	Coil resistance (Ω)	Armature OFF	Armature ON	Pick-up Voltage (V)	Dropout Voltage (V)	Maximum Voltage (V)	Power Consumption (W)
AC	6	214.1	183	12.2	0.04	0.08	Max. 75 %	Min. 30%	110%	Approx. 1.0 W to 1.2 W (60 Hz)
	12	106.5	91	46	0.17	0.33				
	24	53.8	46	180	0.69	1.3				
	50	25.7	22	788	3.22	5.66				
	100/110	11.7/12.9	10/11	3,750	14.54	24.6				Approx 0.9 W to 1.1 W (60 Hz)
	110/120	9.9/10.8	8.4/9.2	4,430	19.2	32.1				
	200/220	6.2/6.8	5.3/5.8	12,950	54.75	94.07				
	220/240	4.8/5.3	4.2/4.6	18,790	83.5	136.4				
DC	6	150		40	0.17	0.33	Max. 75%	Min. 10%	110%	Approx. 0.9 W
	12	75		160	0.73	1.37				
	24	36.9		650	3.2	5.72				
	48	18.5		2,600	10.6	21.0				
	100/110	9.1/10		11,000	45.6	86.2				

Note 1: The rated current and coil resistance are measured at a coil temperature of 23 °C [73.4 °F] with tolerances of +15%, -20% for AC rated current and ± 15% for DC coil resistance.

Note 2: The rated current of N1 and X1 types is 4 mA higher than the value in the table above.

SPECIFICATIONS

Contact material		Silver
Contact resistance		Max. 50 MOhm
Operate time		Max. 20 ms
Release time		Max. 20 ms
Operating frequency	Mechanical	18,000 operations per hour
	Electrical	1,800 operations per hour
Insulation resistance		Min. 100 Mw at 500 Vdc
Dielectric withstand voltage		1,800 Vac 50 Hz/60 Hz for one minute between non-continuous current carrying terminals and between coil thermals and contact terminals
Vibration resistance	Mechanical durability	10 Hz to 55 Hz at double amplitude of 1.0 mm
	Malfunction durability	10 Hz to 55 Hz at double amplitude of 1.0 mm
Shock resistance	Mechanical durability	1,000 m/s^2 (approx. 100 g)
	Malfunction durability	200 m/s^2 (approx. 20 g)
Service life	Mechanical	AC: Min. 50 million operations (at operating frequency of 18,000 operations/hour) DC: Min. 100 million operations (at operating frequency of 18,000 operations/hour)
	Electrical	DPDT: Min. 500,000 operations (at operating frequency of 1,800 operations/hour) 4PDT: Min. 200,000 operations (at operating frequency of 1,800 operations/hour)
Weight		Approximately 35 g

Note 1: The data shown above are of initial value

CHARACTERISTIC DATA

DPDT

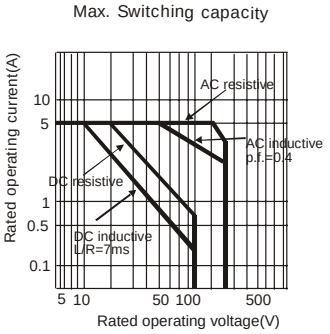

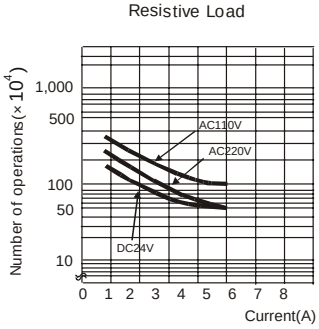

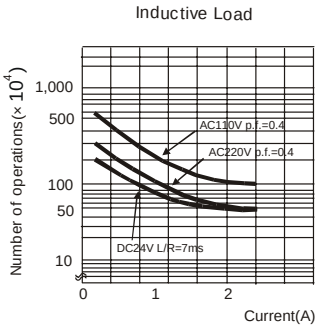

4PDT

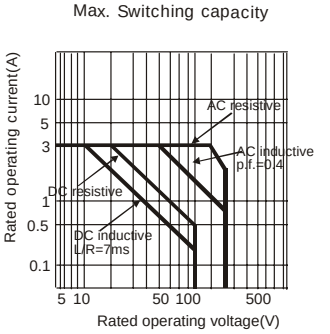

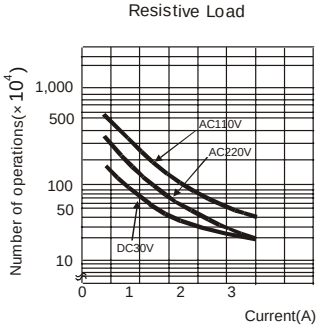

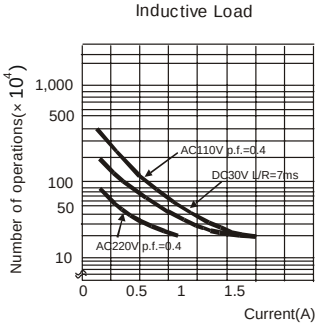

HOLDING CLIPS

- Holding clips are included with the sockets
- Holding clips for the SMF-08N and SMF-14N cannot be removed once inserted
- Holding clips for all SMB sockets are wire for easy removal
- Holding clips are to be inserted into the slots provided on the socket

DIMENSIONS (For reference only – mm/in)

Figure 1. Dimensions
For SZX-SMF-08N and SZX-SMF-14N sockets

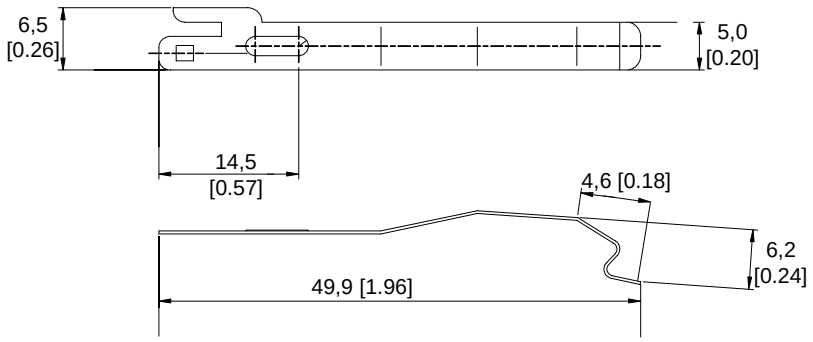

Figure 2. Dimensions
For all SZX-SMB sockets

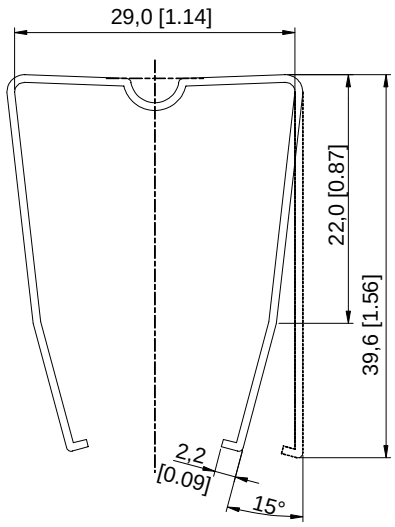

CATALOG LISTING MATRIX

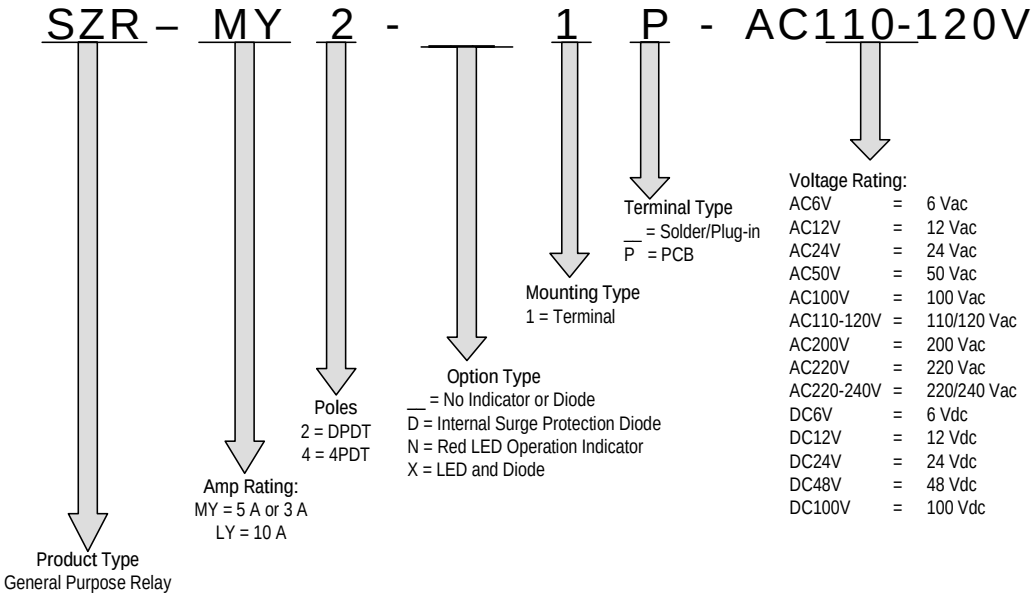

FIGURE 3. DIMENSION, CIRCUIT DIAGRAM, TERMINAL ARRANGEMENT, AND MOUNTING HOLE FOR
SZR-MY2-1, SZR-MY2-N1, SZR-MY2-D1, and SZR-MY2-X1

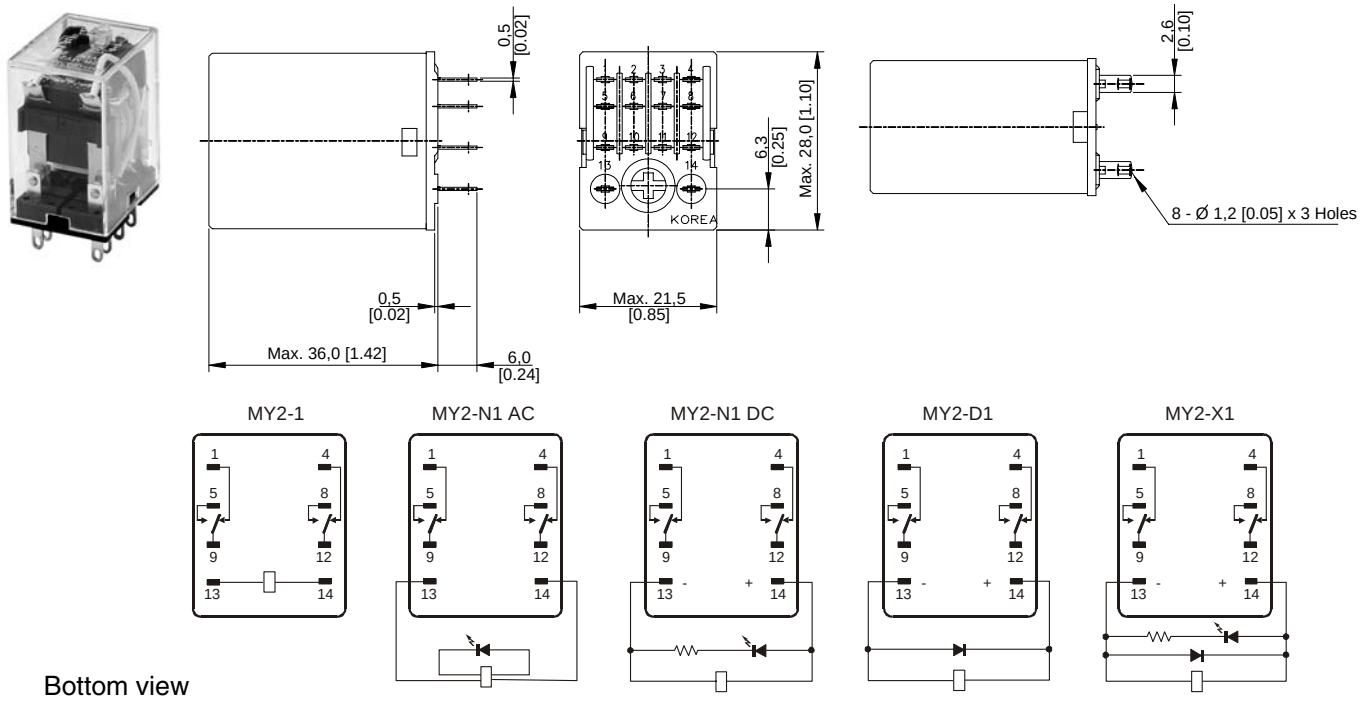

FIGURE 4. DIMENSION, CIRCUIT DIAGRAM, TERMINAL ARRANGEMENT, AND MOUNTING HOLE FOR
SZR-MY2-1P and SZR-MY4-1P

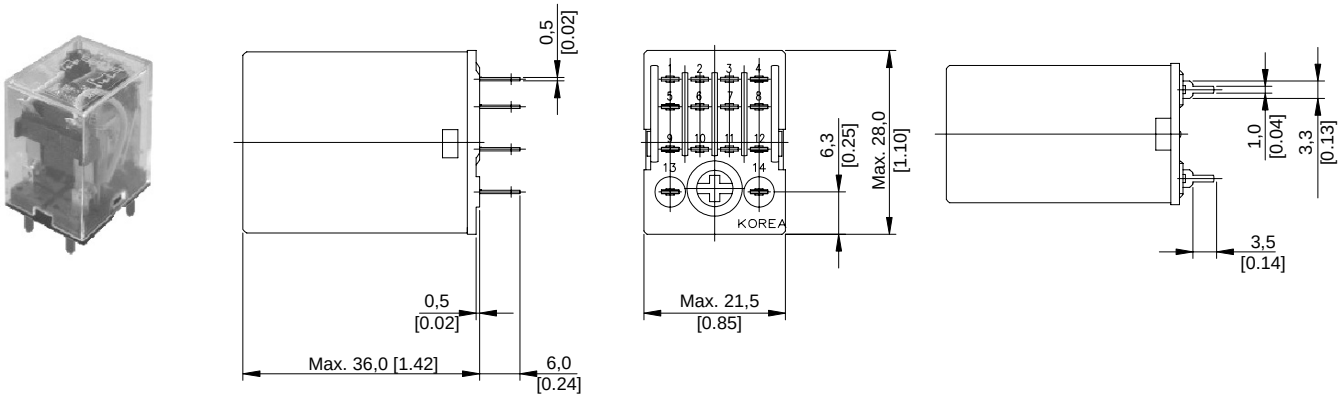

The circuit diagram is the same wit standard type of SZR-MY2-1 or the SZR-MY4-1

FIGURE 5. DIMENSION, CIRCUIT DIAGRAM, TERMINAL ARRANGEMENT, AND MOUNTING HOLE FOR SZR-MY4-1, SZR-MY4-N1, SZR-MY4-D1, and SZR-MY4-X1

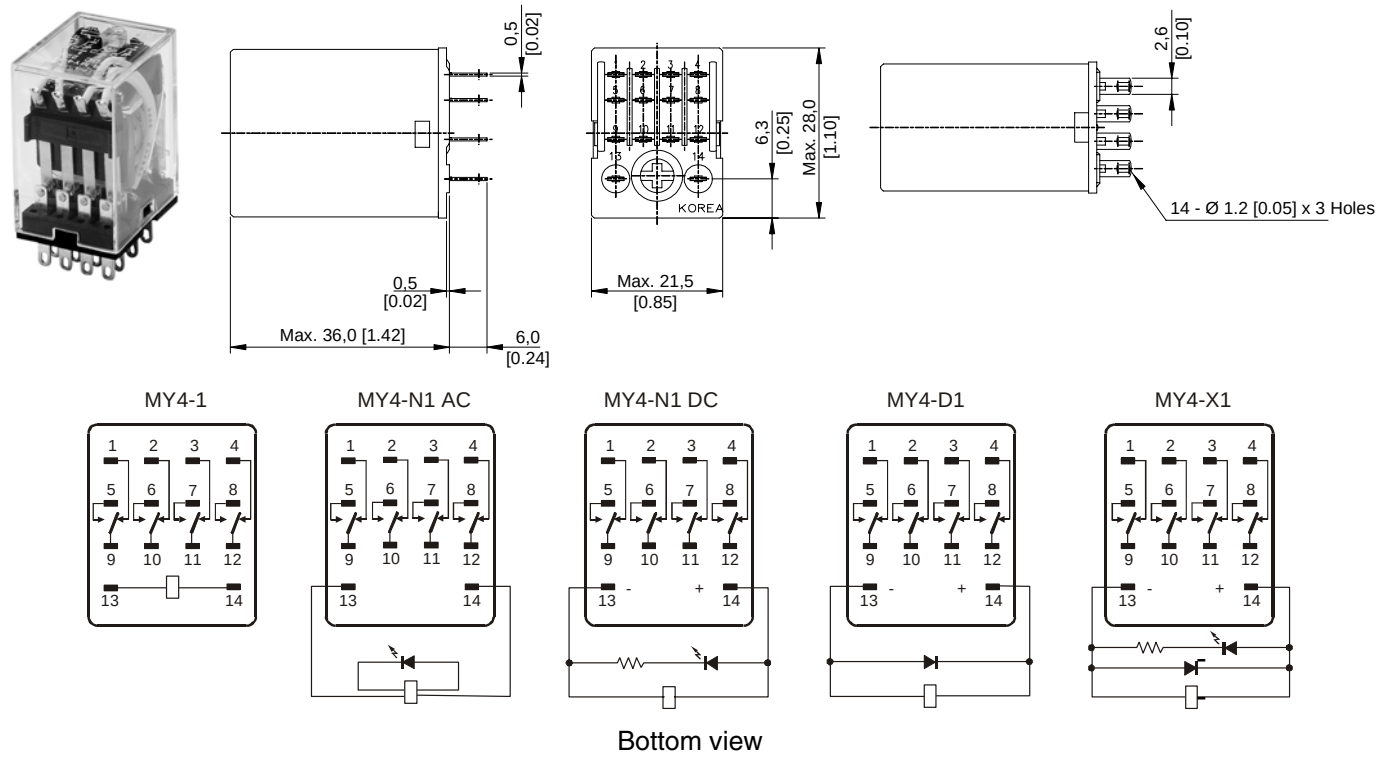

FIGURE 6. CIRCUIT DRAWING FOR SZR-MY2- and SZR-MY4-

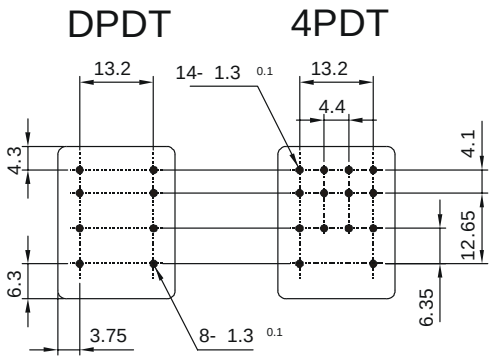

SOCKETS

FIGURE 7. SZX-SMF-08N

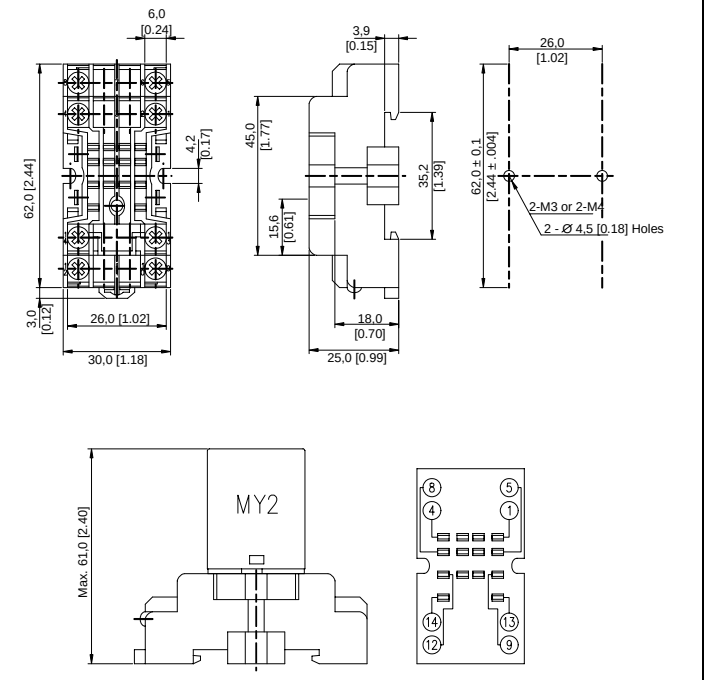

FIGURE 8. SZX-SMF-14N

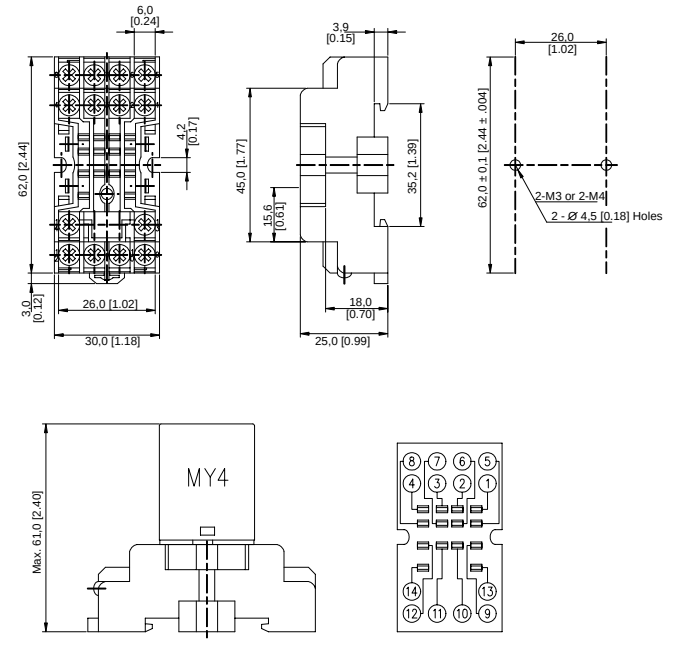

FIGURE 9. SZX-SMB-08

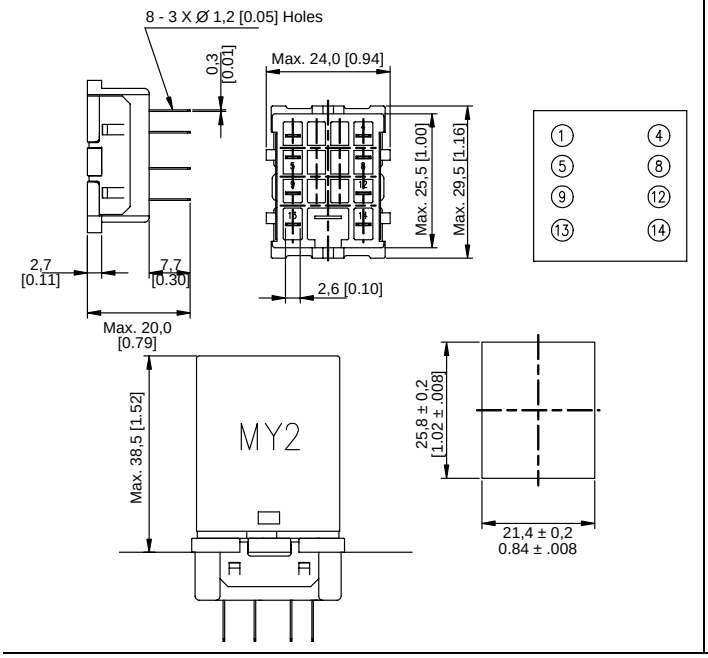

FIGURE 10. SZX-SMB-14

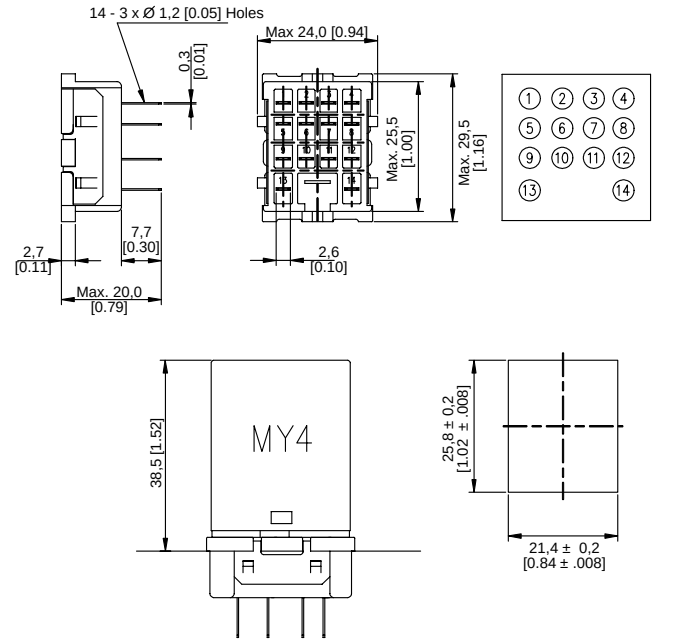

FIGURE 11. SZX-SMB-08P

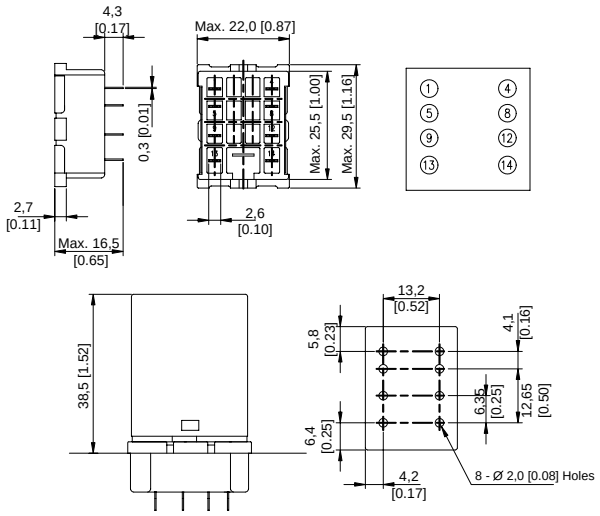

FIGURE 12. SZX-SMB-14P

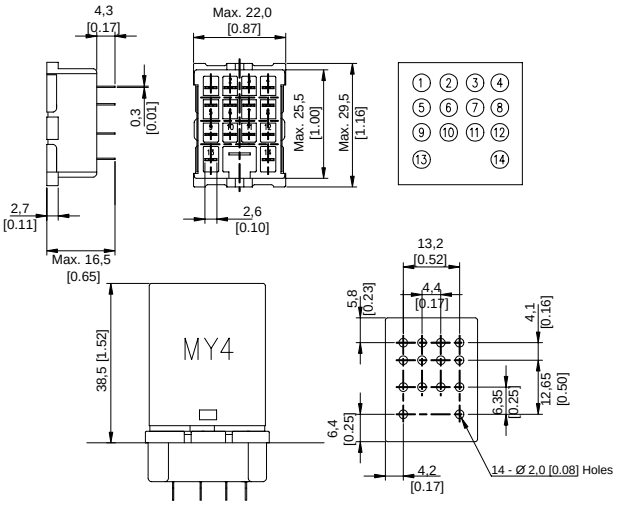

WARRANTY/REMEDY

Honeywell warrants goods of its manufacture as being free of defective materials and faulty workmanship. Contact your local sales office for warranty information. If warranted goods are returned to Honeywell during the period of coverage, Honeywell will repair or replace without charge those items it finds defective. **The foregoing is Buyer's sole remedy and is in lieu of all other warranties, expressed or implied, including those of merchantability and fitness for a particular purpose.**

Specifications may change without notice. The information we supply is believed to be accurate and reliable as of this printing. However, we assume no responsibility for its use.

While we provide application assistance personally, through our literature and the Honeywell web site, it is up to the customer to determine the suitability of the product in the application.

For application assistance, current specifications, or name of the nearest Authorized Distributor, contact a nearby sales office. Or call:

1-800-537-6945 USA/Canada
1-815-235-6847 International

FAX

1-815-235-6545 USA

INTERNET

www.honeywell.com/sensing
info.sc@honeywell.com

Honeywell

Sensing and Control
www.honeywell.com/sensing
Honeywell
11 West Spring Street
Freeport, Illinois 61032

009550-4-EN IL50 GLO 0104 Printed in USA
Copyright 2003-2004 Honeywell International Inc. All Rights Reserved.