QLM Fan Vibration Sleeves

Material: TPE (Thermoplastic Elastomer) RoHS Compliant
Color: Black
Hardness: ca 70° Shore A
Fire Resistance: UL94-V0

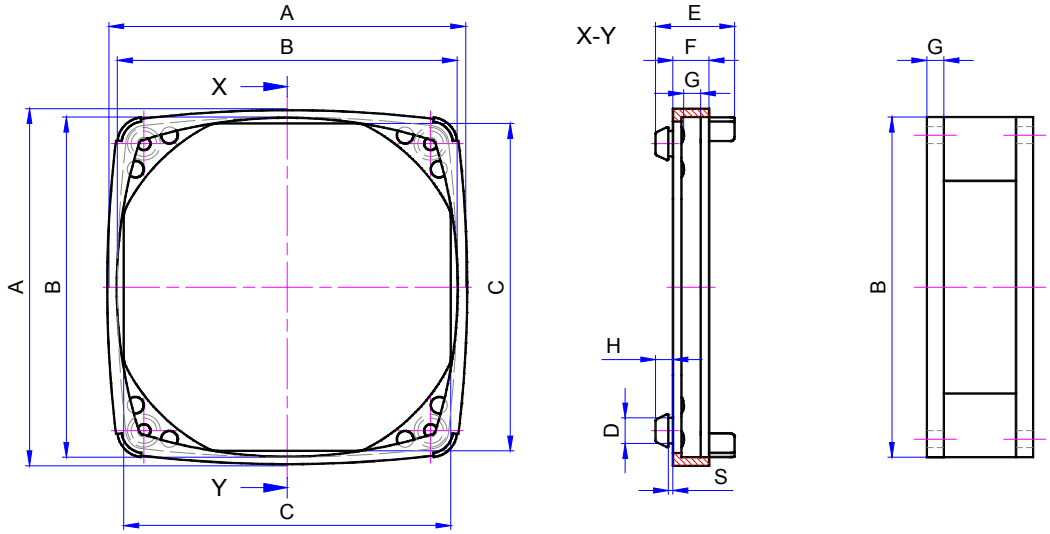

Ordering Information: **QLM** – **40** – **20** – **10 or 20**

Series | Fan Size B | Fan Flange Thickness | 10 = panel thickness from 0.75 to 1.25mm; 20 = panel thickness from 1.50 to 2.50mm

CUSTOM SIZES AVAILABLE BY REQUEST

Part Number	A Inch / mm	B Inch / mm	C Inch / mm	D Inch / mm	E Inch / mm	F Inch / mm	G Inch / mm	H Inch / mm	S Inch / mm	PANEL THICKNESS Inch / mm
QLM-40-20-10	1.692 / 43	1.574 / 40	1.496 / 38	.177 / 4.5	.581 / 14.75	.207 / 5.25	.008 / 2.0	.138 / 3.5	.039 / 1.0	.030 / .75 - .049 / 1.25
QLM-40-20-20	1.692 / 43	1.574 / 40	1.496 / 38	.177 / 4.5	.620 / 15.75	.207 / 5.25	.008 / 2.0	.178 / 4.5	.079 / 2.0	.059 / 1.5 - .098 / 2.5
QLM-60-30-10	2.520 / 64	2.362 / 60	2.283 / 58	.197 / 5.0	.689 / 17.5	.295 / 7.5	.008 / 2.0	.157 / 4.0	.039 / 1.0	.030 / .75 - .049 / 1.25
QLM-60-30-20	2.520 / 64	2.362 / 60	2.283 / 58	.197 / 5.0	.728 / 18.5	.295 / 7.5	.118 / 3.0	.197 / 5.0	.079 / 2.0	.059 / 1.5 - .098 / 2.5
QLM-80-40-10	3.307 / 84	3.150 / 80	3.031 / 77	.228 / 5.8	.728 / 18.5	.335 / 8.5	.157 / 4.0	.157 / 4.0	.039 / 1.0	.030 / .75 - .049 / 1.25
QLM-80-40-20	3.307 / 84	3.150 / 80	3.031 / 77	.228 / 5.8	.768 / 19.5	.335 / 8.5	.157 / 4.0	.197 / 5.0	.079 / 2.0	.059 / 1.5 - .098 / 2.5
QLM-80-50-10	3.307 / 84	3.150 / 80	3.031 / 77	.228 / 5.8	.807 / 20.5	.374 / 9.5	.197 / 5.0	.157 / 4.0	.039 / 1.0	.030 / .75 - .049 / 1.25
QLM-80-50-20	3.307 / 84	3.150 / 80	3.031 / 77	.228 / 5.8	.846 / 21.5	.374 / 9.5	.197 / 5.0	.197 / 5.0	.079 / 2.0	.059 / 1.5 - .098 / 2.5
QLM-92-40-10	3.819 / 97	3.622 / 92	3.504 / 89	.236 / 6.0	.768 / 19.5	.374 / 9.5	.157 / 4.0	.157 / 4.0	.039 / 1.0	.030 / .75 - .049 / 1.25
QLM-92-40-20	3.819 / 97	3.622 / 92	3.504 / 89	.236 / 6.0	.807 / 20.5	.374 / 9.5	.157 / 4.0	.197 / 5.0	.079 / 2.0	.059 / 1.5 - .098 / 2.5
QLM-92-50-10	3.819 / 97	3.622 / 92	3.504 / 89	.236 / 6.0	.846 / 21.5	.413 / 10.5	.197 / 5.0	.157 / 4.0	.039 / 1.0	.030 / .75 - .049 / 1.25
QLM-92-50-20	3.819 / 97	3.622 / 92	3.504 / 89	.236 / 6.0	.886 / 22.5	.413 / 10.5	.197 / 5.0	.197 / 5.0	.079 / 2.0	.059 / 1.5 - .098 / 2.5
QLM-119-40-10	4.921 / 125	4.685 / 119	4.567 / 116	.315 / 8.0	.866 / 22.0	.374 / 9.5	.157 / 4.0	.177 / 4.5	.039 / 1.0	.030 / .75 - .049 / 1.25
QLM-119-40-20	4.921 / 125	4.685 / 119	4.567 / 116	.315 / 8.0	.906 / 23.0	.374 / 9.5	.157 / 4.0	.217 / 5.5	.079 / 2.0	.059 / 1.5 - .098 / 2.5
QLM-119-50-10	4.921 / 125	4.685 / 119	4.567 / 116	.315 / 8.0	.945 / 24.0	.413 / 10.5	.197 / 5.0	.177 / 4.5	.039 / 1.0	.030 / .75 - .049 / 1.25
QLM-119-50-20	4.921 / 125	4.685 / 119	4.567 / 116	.315 / 8.0	.984 / 25.0	.413 / 10.5	.197 / 5.0	.217 / 5.5	.079 / 2.0	.059 / 1.5 - .098 / 2.5
QLM-119-60-10	4.921 / 125	4.685 / 119	4.567 / 116	.315 / 8.0	1.024 / 26.0	.453 / 11.5	.236 / 6.0	.177 / 4.5	.039 / 1.0	.030 / .75 - .049 / 1.25
QLM-119-60-20	4.921 / 125	4.685 / 119	4.567 / 116	.315 / 8.0	1.063 / 27.0	.453 / 11.5	.236 / 6.0	.217 / 5.5	.079 / 2.0	.059 / 1.5 - .098 / 2.5

7610 Jenther Drive,
Mentor, OH 44060
Phone: 1-440-951-3300
Fax: 1-440-951-7252

Qualtek Electronics Corporation

E-Mail: mailbox@qualtekusa.com
Web: www.qualtekusa.com