MICRO SWITCH
a Honeywell Division
FED. MFG. CODE 91929

SWITCH-ENCLOSED

CATALOG LISTING
21EN42-6

CIRCUIT SEQUENCE

PLUNGER OPERATE
CIRCUIT 4-5 (N.C.) MUST BREAK
PRIOR TO CIRCUIT 1-2 (N.C.)
PLUNGER RELEASE
CIRCUIT 1-3 (N.O.) MUST BREAK
PRIOR TO CIRCUIT 4-6 (N.O.)

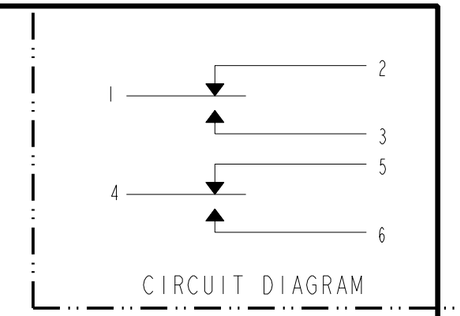

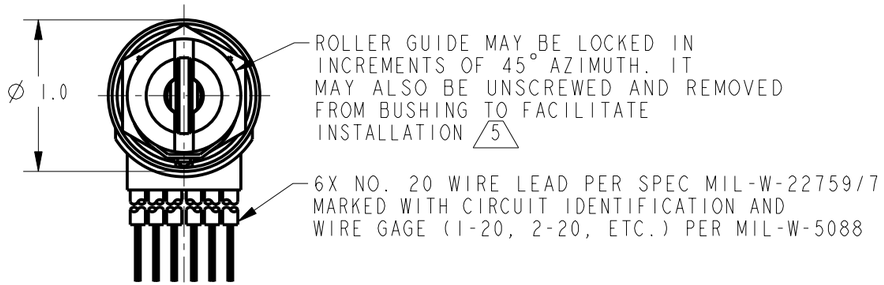

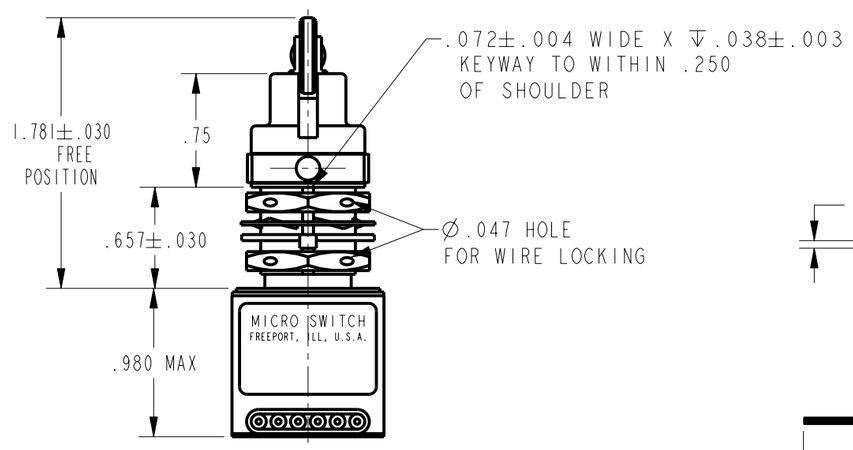

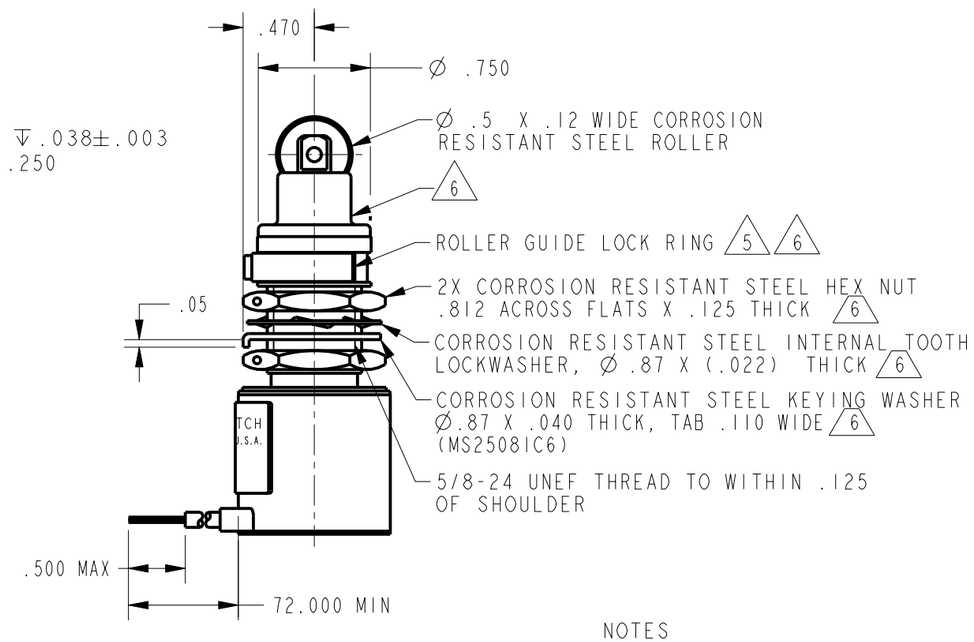

NOTES
1 - CORROSION RESISTANT STEEL ENCLOSURE
2 - SWITCH SEALED PER MIL-PRF-8805 SYMBOL 4
3 - CIRCUIT DIAGRAM, DATE CODE, FED. MFG. CODE AND CATALOG LISTINGS ARE SHOWN ON NAMEPLATE
4 - COINCIDENCE OF OPERATING AND RELEASING POINTS: .025 OF PLUNGER TRAVEL
5 TO ADJUST ROLLER DIRECTION, REMOVE ROLLER GUIDE LOCK RING, SCREW ROLLER GUIDE DOWN AS FAR AS POSSIBLE, THEN UNSCREW TO DESIRED DIRECTION. SECURE BY REPLACING ROLLER GUIDE LOCK RING.
6 HARDWARE MAY BE PACKAGED UNASSEMBLED PER MIL-PRF-8805

THIS DRAWING COVERS A PROPRIETARY ITEM AND IS THE PROPERTY OF MICRO SWITCH, A DIVISION OF HONEYWELL. THIS DRAWING IS NOT TO BE COPIED OR USED WITHOUT THE APPROVAL OF MICRO SWITCH

THIRD ANGLE PROJECTION
SCALE FULL
DO NOT SCALE PRINT

UNLESS OTHERWISE SPECIFIED TOLERANCES ARE

ONE PLACE	(.0)	±.030
TWO PLACE	(.00)	±.015
THREE PLACE	(.000)	±.005
ANGLES		±

WEIGHT 8.9 OZ MAX

ANSI Y14.5M-1982 APPLIES

CHARACTERISTICS

OPERATING FORCE	6-12 LB
DIFFERENTIAL FORCE	30 LB MAX
RELEASE FORCE	4 LB MIN
PRETRAVEL	.060 MAX
DIFFERENTIAL TRAVEL	.040 MAX
OVERTRAVEL	.230 MIN

ELECTRICAL DATA

CONTACT ARRANGEMENT
2X S P D T

LOAD	28 VDC	
	SEA LEVEL	50,000 FT.
RES	4	4
IND	2	2
MOTOR	4	

21EN42-6
CATALOG LISTING
PAGE 1 OF 1
RELEASE NO. PR-22324
REPLACES
ISSUE 4
CHECK
REVISIONS
A C095161 TSM 3AUG99
CHECK
03AUG99
JAF
CHECK
03AUG99
DRAWN TSM
PTC/CAD 2D