THIS DRAWING IS UNPUBLISHED. RELEASED FOR PUBLICATION 20
© COPYRIGHT 20 BY - ALL RIGHTS RESERVED.

REVISIONS

| P | LTR | DESCRIPTION | DATE | DWN | APVD |
|---|---|---|---|---|---|
| | M | ECO-13-012991 | 14AUG2013 | JM | TE |

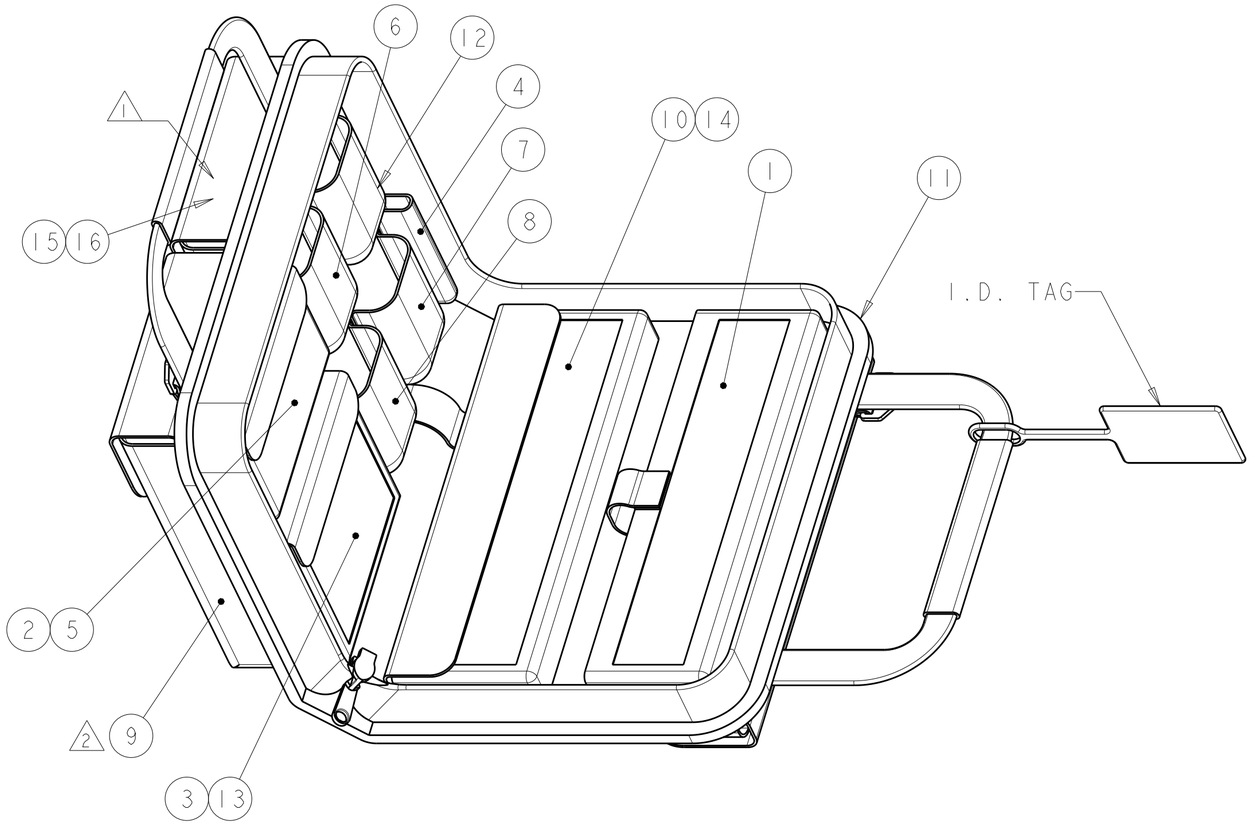


1 MANUFACTURER'S INSTRUCTION SHEETS.

2 OPTIONAL SHOULDER STRAP.

3. INSTRUCTION SHEETS 408-4020, 408-8925, 408-4471 AND 408-10103 EXPLAIN THE LightCrimp Plus TERMINATION TECHNIQUE AND ARE AVAILABLE FOR DOWNLOAD AT www.tycoelectronics.com/documents OR www.ampnetconnect.com/foguide

| -2 | -1 | PART NUMBER | DESCRIPTION | ITEM NO. |
|---|---|---|---|---|
| 1 | 1 | 2064710-1 | FIBER OPTICS CLEANING & INSPECTION GUIDE | 16 |
| 1 | 1 | 1374503-1 | CD ROM, TERMINATION TRAINING | 15 |
| 1 | - | 1754765-1 | MICROSCOPE ADAPTER, 1.25mm | 14 |
| 1 | 1 | 1278625-1 | CABLE CLAMP | 13 |
| 1 | 1 | 1553661-1 | SLITTER TOOL, 2mm & 3mm | 12 |
| 1 | 1 | 1278540-1 | PREMIUM SOFT CASE | 11 |
| 1 | - | 1754767-1 | 200x MICROSCOPE KIT | 10 |
| 1 | 1 | 1871696-1 | FIBER CLEAVER, SLIDE CUTTER | 9 |
| 1 | 1 | 1278637-1 | ARAMID YARN SHEARS | 8 |
| 1 | 1 | 1754708-1 | FIBER STRIP TOOL, COMBINATION | 7 |
| 1 | 1 | 492109-2 | MICRO STRIP TOOL MT-RJ (.008IN) | 6 |
| 14 | 14 | 501857-2 | ALCOHOL WIPES | 5 |
| 2 | 2 | 1278422-1 | OPEN END WRENCH, 1/4IN | 4 |
| 1 | 1 | 2064540-1 | CABLE HOLDER, LightCrimp Plus/LC/SC | 3 |
| 1 | 1 | 1985766-1 | DIESET, LightCrimp Plus/LC/SC/SPLICE | 2 |
| 1 | 1 | 1976850-2 | HANDTOOL FRAME, BLACK | 1 |

THIS DRAWING IS A CONTROLLED DOCUMENT.

DIMENSIONS: mm

TOLERANCES UNLESS OTHERWISE SPECIFIED:
0 PLC ±-
1 PLC ±-
2 PLC ±-
3 PLC ±-
4 PLC ±-
ANGLES ±-

MATERIAL - -
FINISH - -

DWN B.BRIGGS 17MAY2006
CHK D.KIRSCH 17MAY2006
APVD S.BUCHTER 17MAY2006
PRODUCT SPEC -
APPLICATION SPEC -
WEIGHT -

TE Connectivity

NAME TERMINATION KIT, LightCrimp Plus, AMP SC/LC -

| SIZE | CAGE CODE | DRAWING NO | RESTRICTED TO |
|---|---|---|---|
| A2 | - | C-1754845 | - |

CUSTOMER DRAWING

SCALE NTS SHEET 1 OF 1 REV M