REV.	DATE	DESCRIPTION
A	06/05/03	UPDATE DRAWING FORMAT
B	07/28/06	ADD SLOT DIMENSION NOTE

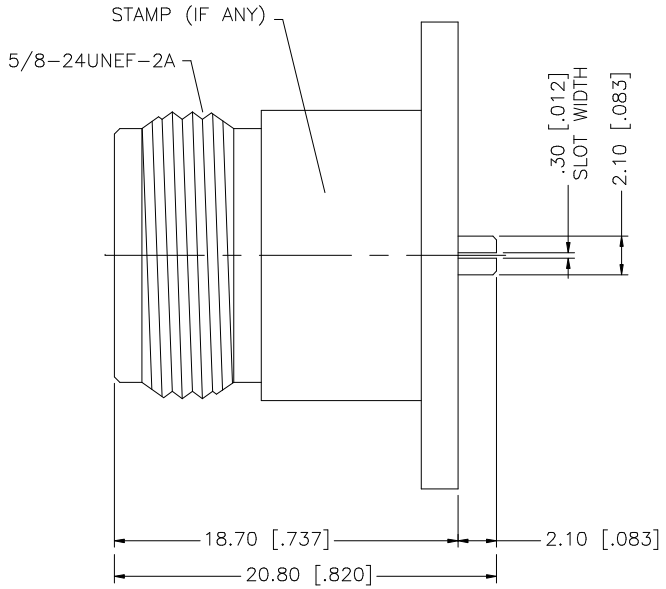

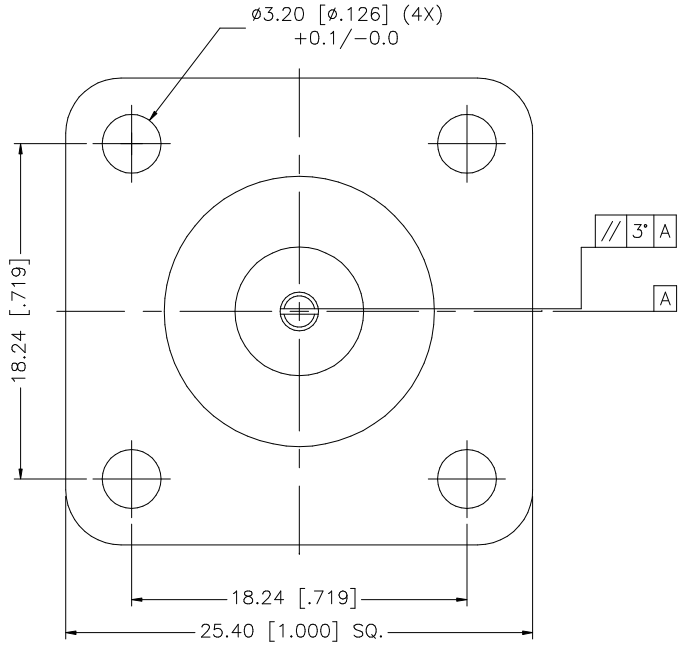

NOTE:

1. SLOT DIMENSIONS AS FOLLOWS:
   172121 – 0.012 SLOT
   172121–10 – 0.020 SLOT
   172121–11 – 0.028 SLOT
   172121–12 – 0.035 SLOT

	DESCRIPTION	MATERIAL	FINISH	QTY
8				
7				
6				
5				
4				
3	CONTACT PIN	PHOS. BRONZE	GOLD	1
2	INSULATOR	TEFLON	NATURAL	1
1	BODY	BRASS	NEXCOTE	1

UNLESS OTHERWISE SPECIFIED DIMENSIONS ARE IN MILLIMETERS. DIMENSIONS IN [ ] ARE IN INCHES AND FOR CUSTOMER REFERANCE ONLY.

UNLESS OTHERWISE SPECIFIED TOLERANCES FOR MILLIMETERS ARE:
0.5 – 8mm ± 0.20mm
8 – 30mm ± 0.40mm
30 – 120mm ± 0.50mm

UNLESS OTHERWISE SPECIFIED TOLERANCES FOR INCHES ARE:
.020 – .315 = ± 0.007"
.315 – 1.180 = ± 0.015"
1.180 – 4.724 = ± 0.020"

DO NOT SCALE DRAWING

APPROVALS		DATE
DRAWN	G.R.S.	07/28/06
CHECKED		
ISSUED		
SHEET	1 OF 1	
CAD FILE	C:/172/172121.DWG	

Amphenol Connex

PART DESCRIPTION: N PANEL RECEPTACLE JACK

PART NO.: 172121

DWG. NO.: 172121.DWG | REV.: B | SIZE: A | SCALE: NA