Jul.1.2019 Copyright 2019 HIROSE ELECTRIC CO., LTD. All Rights Reserved.
In case of consideration for using Automotive equipment / device which demand high reliability, kindly contact our sales window correspondents.

	COUNT	DESCRIPTION OF REVISIONS	BY	CHKD	DATE		COUNT	DESCRIPTION OF REVISIONS	BY	CHKD	DATE
1	3	RE-E-09064	K.H	A.F	03.01.24						. .
2	3	RE-E-09430	K.H	S.U	03.07.15						. .
					. .						. .

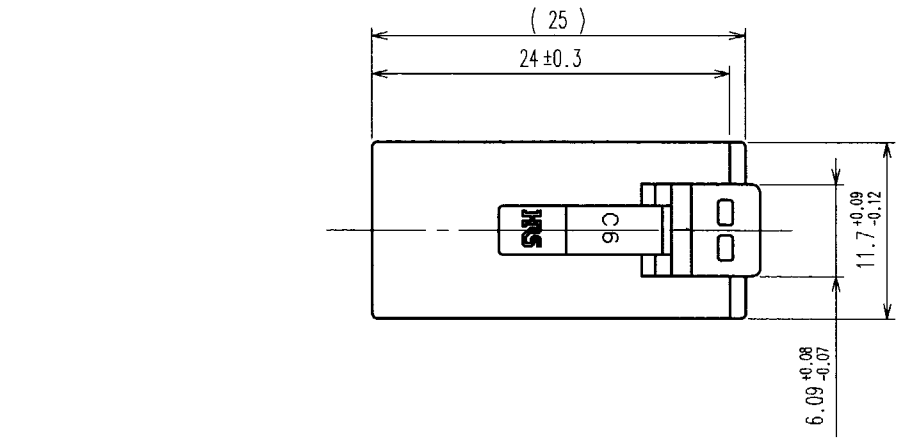

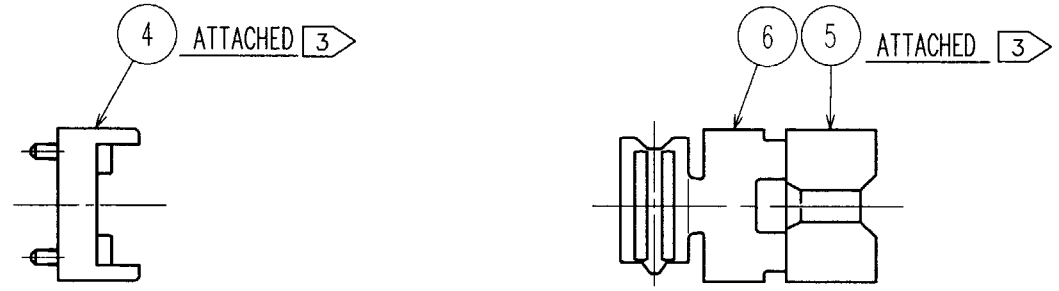

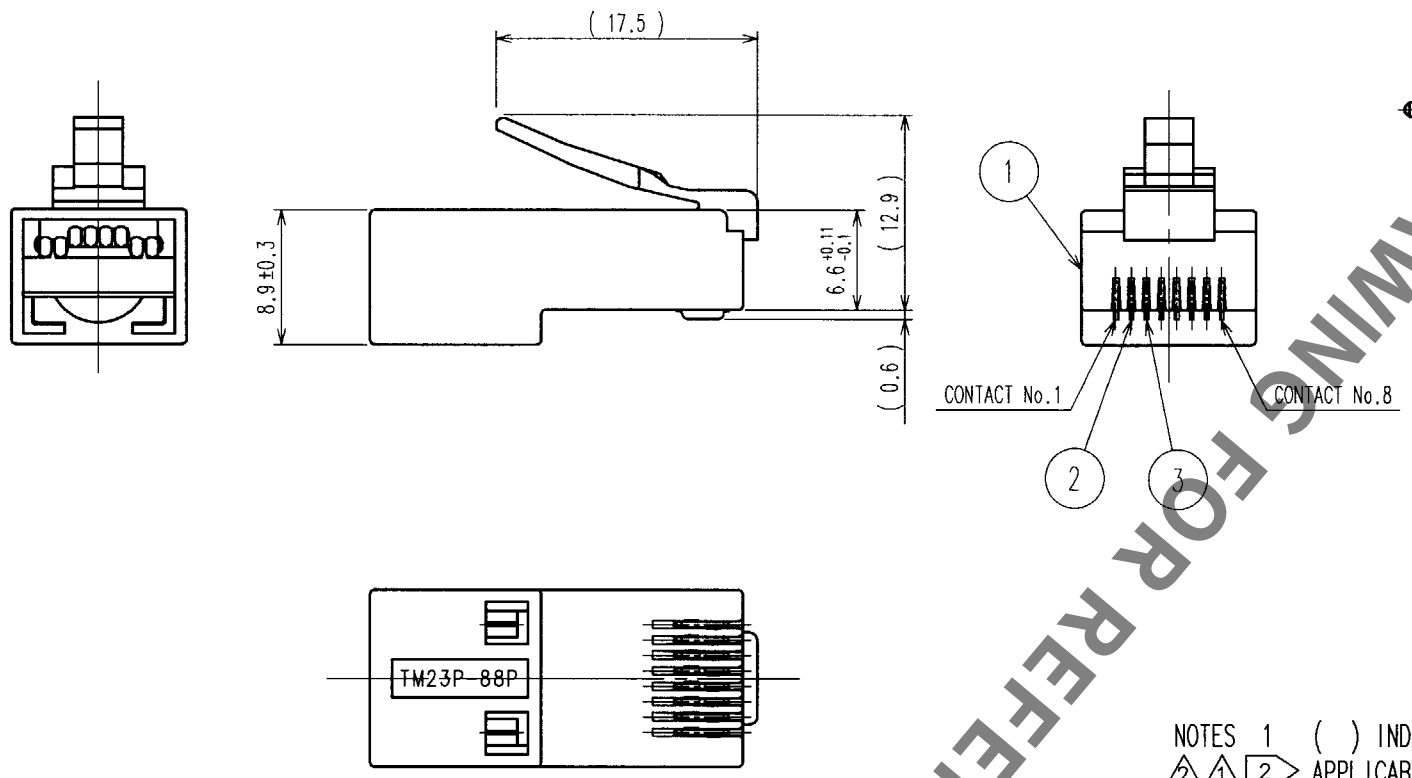

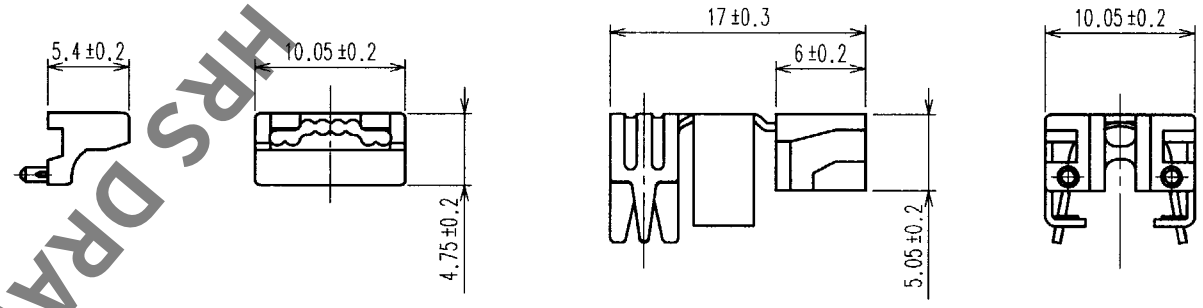

2 TABLE-1

APPLICABLE CABLE SPECIFICATIONS		
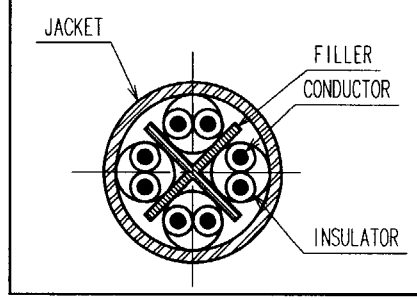	CONDUCTOR	φ 0.5 SOLID WIRE
		AWG#24 STRANDED WIRE
	INSULATOR DIAMETER	1 (φ 0.95～φ 1.05)
	JACKET OUTER DIAMETER	2 1 (φ 5.4～φ 6.8)

NOTES 1 ( ) INDICATES THE REFERENCE DIMENSIONS.
2 1 2 APPLICABLE CABLE IS SHOWN IN TABLE-1.
3 ATTACHED REF No.④⑤⑥ ARE USED FOR ARRANGEMENT OF CORE WIRE.
2 4 TO SATISFY CAT6 PERFORMANCE, PLEASE ASSEMBLE ACCORDING TO CABLE ASSEMBLY MANUAL:ETAD-E2415.
5 APPLY SEPARATELY ORDERED SPECIAL BOOTS TM23P-8-BT(CL222-2917-9), WHEN REQUIRED.

WITH SPECIAL BOOTS ASSEMBLED

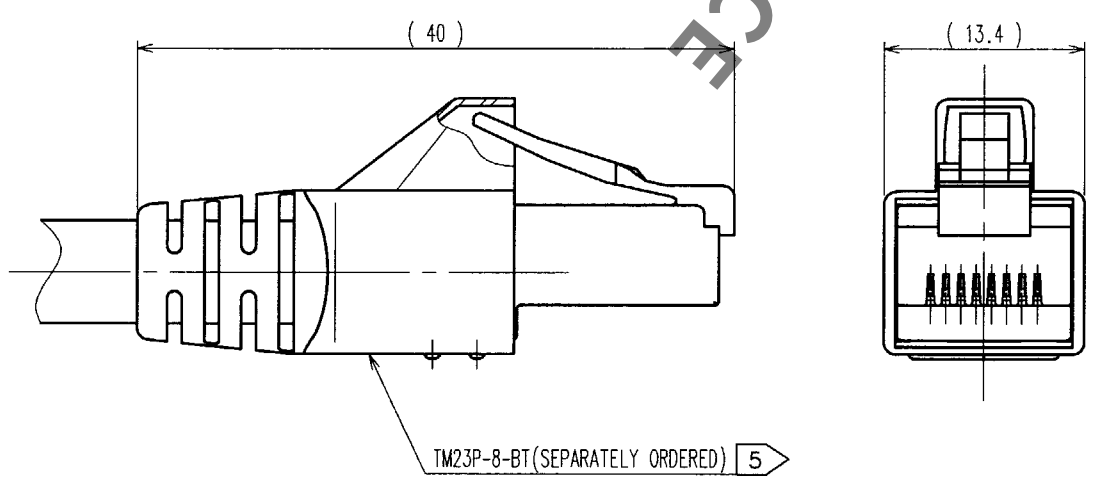

NO.	MATERIAL	FINISH, REMARKS	NO.	MATERIAL	FINISH, REMARKS
3	PHOSPHOR BRPNZE	GOLD PLATED 1.27μ m(CONTACT)	6	BRASS	NICKEL PLATED
2	PHOSPHOR BRPNZE	GOLD PLATED 1.27μ m(CONTACT)	5	POLYCARBONATE	UL94V-0(CLEAR)
1	POLYCARBONATE	UL94V-0(CLEAR)	4	POLYCARBONATE	UL94V-0(CLEAR)

CODE NO.(OLD)	DRAWN	DESIGNED	CHECKED	APPROVED	RELEASED
CL	K.HIROKAWA 02.12.05	K.HIROKAWA 02.12.05	A.FUNATSU 02.12.05	S.KIKUTA 02.12.09	. .

SCALE 2 : 1
UNITS mm
DRAWING NO. EDC3-123982
HRS HIROSE ELECTRIC CO., LTD
PART NO. TM23P-88P
CODE NO. CL222-2916-6
1/1

TO
Q

FORM NO.229

HRS DRAWING FOR REFERENCE