THIS DRAWING IS UNPUBLISHED. RELEASED FOR PUBLICATION -,- .
© COPYRIGHT - BY TYCO ELECTRONICS CORPORATION. ALL RIGHTS RESERVED.

LOC	DIST
G	86

REVISIONS

P	LTR	DESCRIPTION	DATE	DWN	APVD
	A1	REDRAWN PER ECR 10-004009	24FEB10	JR	TM

AMP
WIRE RANGE

22-16 AWG
SOLID OR STRANDED

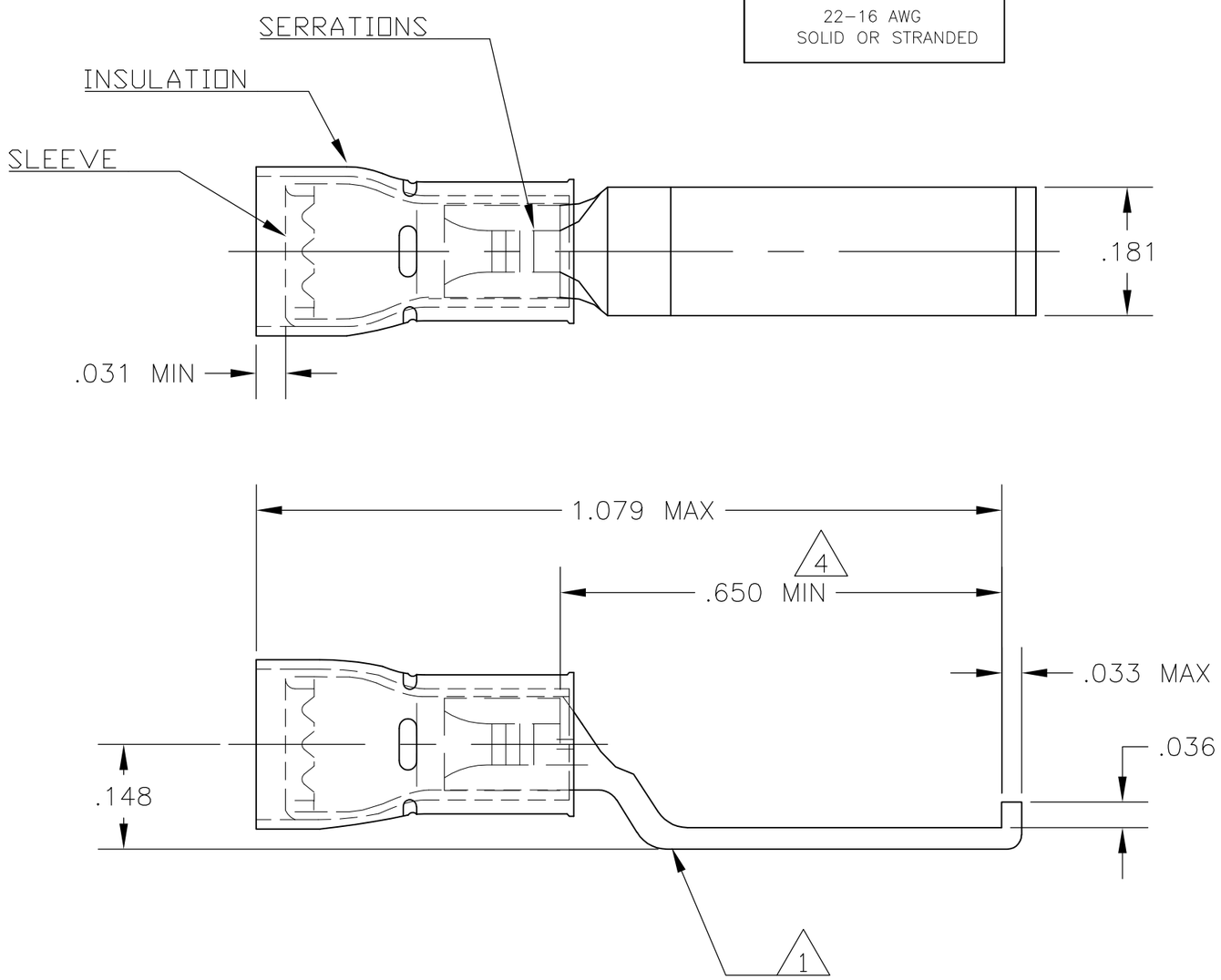

1. STAMP AMP 22-16, LOCATE APPROX AS SHOWN.
2. BODY - COPPER PER ASTM B-152
   SLEEVE - COPPER PER ASTM B-152
   INSULATION - NYLON
3. BODY - TIN PLATE PER ASTM B-545
   SLEEVE - TIN PLATE PER ASTM B-545
   INSULATION - COLOR , RED
4. DIMENSION APPLIES FROM EDGE OF METAL WIRE BBL TO FLANGE.
5. WIRE INSULATION DIA .105 TO .140

151793

PART NO

CUSTOMER SERVICE SYSTEMS

FOR ADDITIONAL PRODUCT INFORMATION OR COPIES OF DRAWINGS AND TECHNICAL DOCUMENTS	PRODUCT INFORMATION CENTER 1-800-522-6752
FOR APPLICATION TOOLING INFORMATION	TOOLING ASSISTANCE CENTER 1-800-722-1111
FOR ORDER ENTRY	1-800-526-5142

THIS DRAWING IS A CONTROLLED DOCUMENT FOR AMP INCORPORATED. IT IS SUBJECT TO CHANGE AND THE CONTROLLING ENGINEERING ORGANIZATION SHOULD BE CONTACTED FOR THE LATEST REVISION.

MAX RECOMMENDED OPERATING TEMPERATURE: 105°C

VOLTAGE RATING: 300V MAX

CIRCULAR MIL AREA: 0.26-1.65mm² [509-3,260] SOLID OR STRANDED

THIS DRAWING IS A CONTROLLED DOCUMENT.

DIMENSIONS: INCHES

TOLERANCES UNLESS OTHERWISE SPECIFIED:

0 PLC	± -
1 PLC	± -
2 PLC	± .008
3 PLC	± -
4 PLC	± -
ANGLES	± 5°

MATERIAL - 2

FINISH - 3

DWN	jr ruth	24FEB10
CHK	TOM MICHIELUTTI	24FEB10
APVD	TOM MICHIELUTTI	24FEB10
PRODUCT SPEC	—	
APPLICATION SPEC	—	
WEIGHT	—	

Tyco Electronics

Tyco Electronics Corporation
Harrisburg, PA 17105-3608

NAME
TERMINAL, LIPPED BLADE, PIDG,
WIRE SIZE 22-16
—

SIZE	CAGE CODE	DRAWING NO	RESTRICTED TO
A3	00779	C-151793	—

CUSTOMER DRAWING | SCALE 5:1 | SHEET 1 OF 1 | REV A1

AMP 1470-19 REV 31MAR2000