LOC	DIST
E	B

REVISIONS

P	LTR	DESCRIPTION	DATE	DWN	APVD
	A1	REVISED PER ECO-11-005150	28APR11	RK	HMR

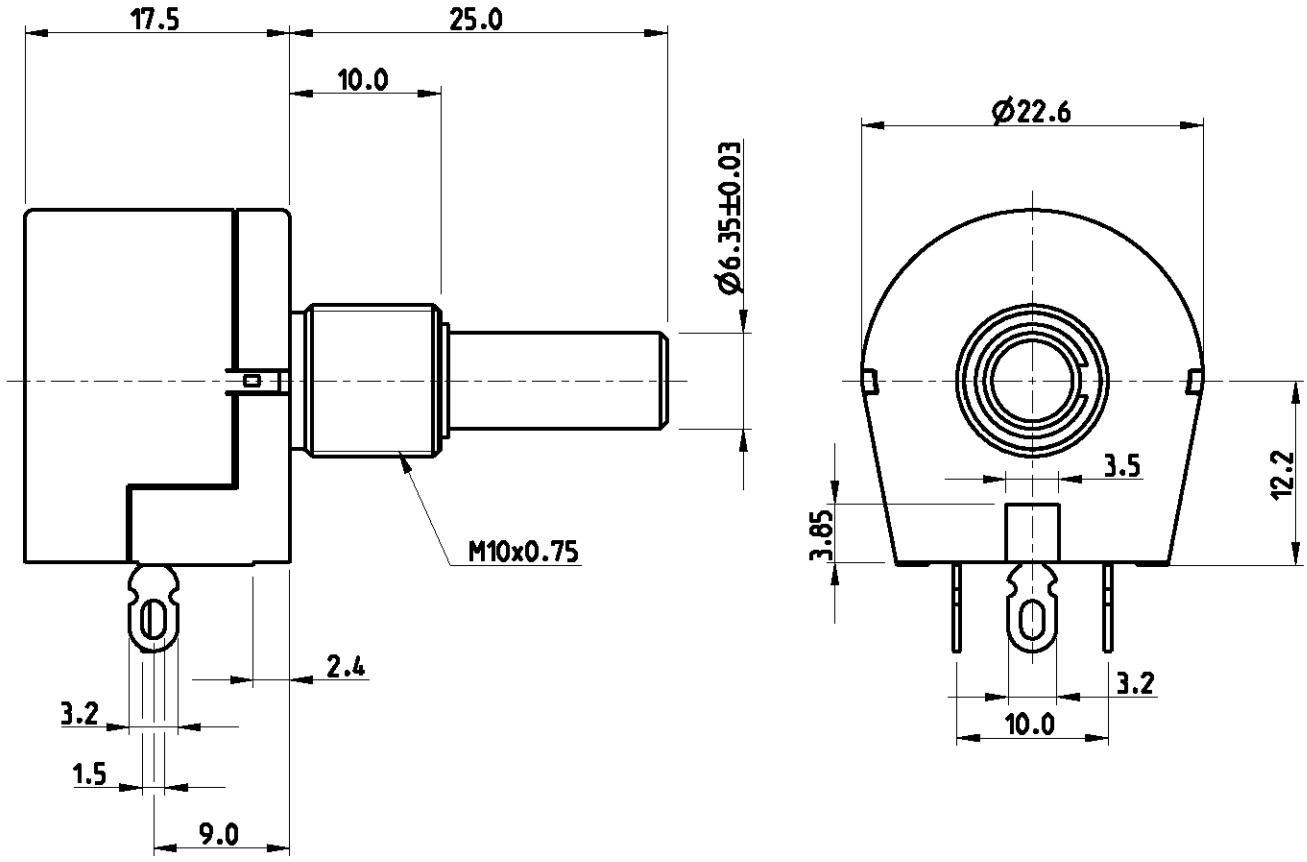

RoHS Compliant

FOR FURTHER INFORMATION SEE DATA SHEET FOR
SERIES TW - WIRE WOUND SPINDLE OPERATED POTENTIOMETER

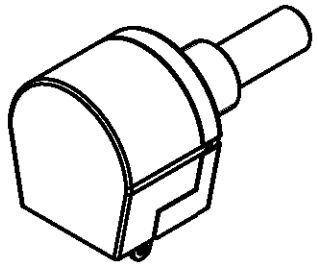

SCALE 1:1

THIS DRAWING IS UNPUBLISHED. © COPYRIGHT BY ALL RIGHTS RESERVED. RELEASED FOR PUBLICATION 2009

DIMENSIONS: mm

TOLERANCES UNLESS OTHERWISE SPECIFIED:

0 PLC	±0.2
1 PLC	±0.1
2 PLC	± -
3 PLC	± -
4 PLC	± -
ANGLES	±5°

DWN	SUBHASH.M	08-JAN-09
CHK	ALLAN.P	08-JAN-09
APVD	STEPHEN.P	08-JAN-09

PRODUCT SPEC: -

APPLICATION SPEC: -

WEIGHT: -

MATERIAL: -

FINISH: -

TE Connectivity

NAME: WIRE WOUND SPINDLE OPERATED POTENTIOMETER SERIES TW

SIZE	CAGE CODE	DRAWING NO	RESTRICTED TO
A4	00779	C-1676979	-

CUSTOMER DRAWING

SCALE	SHEET	OF	REV
2:1	1	1	A1