THIS DRAWING IS UNPUBLISHED. RELEASED FOR PUBLICATION NOV ,2005.
© COPYRIGHT 2005 BY TYCO ELECTRONICS CORPORATION. ALL RIGHTS RESERVED.

LOC	DIST
E	B

REVISIONS

P	LTR	DESCRIPTION	DATE	DWN	APVD
	C	ECR-05-015880	18JUL05	JMS	FWK

NOTES:

1. PACK IN ACCORDANCE WITH AMP SPEC 107-3275
2. 100 TRAY PACK IN ACCORDANCE WITH AMP SPEC 107-3275
3. Ag PLATING
4. THIS ITEM MUST BE WHITE
5. HAND TOOL : 9-1478240-0
6. DIE SET : 9-1478242-0
7. ELECTRICAL CHARACTERISTICS

FREQUENCY RANGE:	DC - 4 GHz
NOMINAL IMPEDANCE:	50 Ohm
INSULATION RESISTANCE:	5000 MOhm
WORKING VOLTAGE:	500 Volts RMS at Sea Level
DIELECTRIC WITHSTAND VOLTAGE:	1500 Volts RMS Max
CONTACT RESISTANCE:	
CENTRE CONTACT:	1.50 mOhm Max
OUTER CONTACT:	0.20 mOhm Max
VSWR @ 4GHz:	1.30:1 Max
INSERTION LOSS dB @ x 3 GHz:	0.20 Max

8. MECHANICAL CHARACTERISTICS

COUPLING NUT RETENTION FORCE:	N/A
CABLE RETENTION FORCE:	170N Min
MOUNT NUT RECOMMENDED TORQUE:	4N
DURABILITY:	500 Cycles Min

9. ENVIRONMENTAL CHARACTERISTICS

OPERATING TEMPERATURE:	-65 to +165 DegC

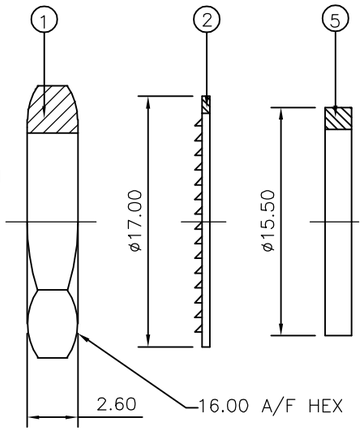

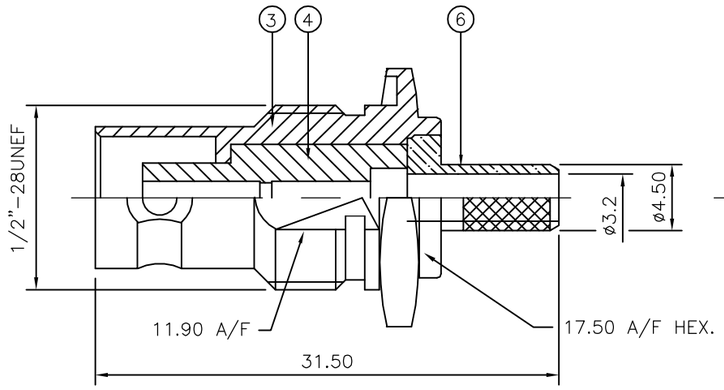

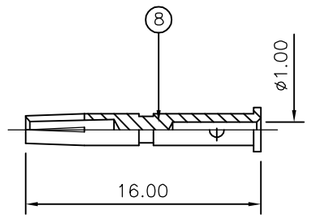

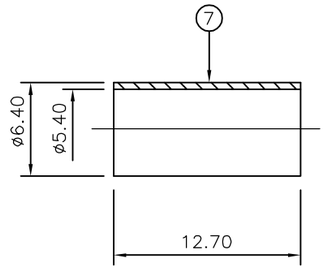

RECOMMENDED CENTRE CONTACT A/F HEX

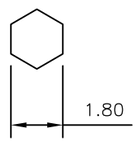

RECOMMENDED CRIMP SLEEVE A/F HEX

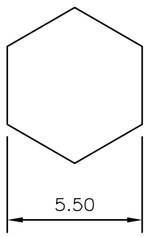

RECOMMENDED CABLE STRIPPING DIM'S

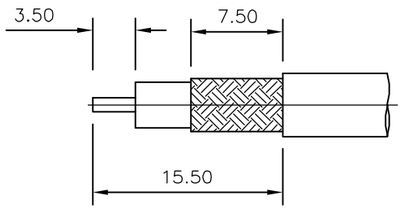

QUANTITY PER ASSY				PARTS LIST		
		6--0	1--0	MATERIAL	DESCRIPTION	ITEM
		1	1	BRASS (3)	CONTACT	8
		1	1	BRASS (3)	FERRULE	7
		1	1	BRASS (3)	CHASSIS	6
		1	1	SILICON RUBBER (4)	GASKET	5
		1	1	PTFE	INSULATION	4
		1	1	BRASS (3)	BODY	3
		1	1	IRON (3)	WASHER	2
		1	1	BRASS (3)	HEX NUT	1

THIS DRAWING IS A CONTROLLED DOCUMENT.

DIMENSIONS: mm

TOLERANCES UNLESS OTHERWISE SPECIFIED:
0 PLC ± -
1 PLC ± -
2 PLC ± -
3 PLC ± -
4 PLC ± -
ANGLES ± -

MATERIAL: SEE TABLE
FINISH: -

DWN	J.SANDWELL	21NOV05
CHK	S.PARLOW	18JUL05
APVD	F.WHEELER-KING	21NOV05
PRODUCT SPEC	108-3435	
APPLICATION SPEC	411-3247	
WEIGHT	-	

CUSTOMER DRAWING

tyco Electronics
Tyco Electronics Corporation
Bideford EX39 4HE

NAME: BNC BULKHEAD JACK REAR MOUNT CRIMP 50 OHM RG58C/U, 141A/U, URM43, 76, Belden9907, KX15 -

SIZE	CAGE CODE	DRAWING NO	RESTRICTED TO
A3	00779	C-1337434	-

SCALE	SHEET	REV
NTS	1 OF 1	C