Installation Instructions for the **HDLS Series Switches**

ISSUE 2
PK 81116

⚠ WARNING

PERSONAL INJURY
DO NOT USE these products as safety or emergency stop devices or in any other application where failure of the product could result in personal injury.
Failure to comply with these instructions could result in death or serious injury.

MOUNTING
All Heavy Duty Limit Switches (HDLS) have exactly the same mounting dimensions. Mount by either of two methods: (a) use two #10 screws from the front, or (b) use two #10-32 UNF screws from the back. HDLS offers the advantage of front mount construction. The electrician will find a complete switch, with no parts missing and ample wiring space.

With plug-in construction, wiring and conduit connection is made to the base receptacle. This feature also reduces downtime, since plug-in unit can be removed without disconnecting wiring or conduit.

To mount either switch, merely tighten mounting screws, tighten plug-in unit or cover screws, and make sure conduit section is sealed. Use of sealant (teflon tape, pipe dope, etc.) is recommended to seal conduit connection.

Because of moisture condensation problems, it is not good practice to mount the switch upside down or at the low point of conduit runs.

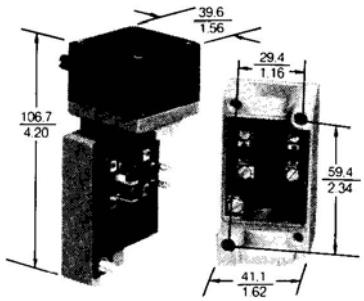

Single-Pole – Plug-in Type

Double-Pole – Non Plug-in Type

Sealing	IP67/68
Enclosure Type	1, 3, 3R, 4, 4X, 6, 6P, 12, 13

Rated Operational Voltages (Ue) and Currents (Ie)

Ue	Ie
120 Vac	6 A
600 Vac	1.2 A
125 Vdc	0.22 A
250 Vdc	0.11 A

WIRING
Use size #12AWG or smaller solid or stranded wire to connect to the pressure type connector terminals. Spades may be up to .312" wide, rings up to .312" dia. With spade or ring type connections, preinsulated connectors or heat-shrinkable tubing should be used to provide insulation between terminals. Circuit diagram is shown on the nameplate.

It will be easier to wire the double-pole units by connecting lead wires to the terminals nearest the conduit opening first. A grounding screw is located in the housing near the conduit opening.

Switch units with an indicator light in the cover are furnished with the lead wires from the light connected to the normally-open male terminals (#3 and #4) unless otherwise specified on the order. Wires can be unsoldered and reconnected to the normally-closed male terminals or they can be ordered connected to the normally-closed terminals by using a modification code (refer to Catalog 40). Always connect these wires to the same set of terminals used for the load. Across the normally open male terminals (#3 and #4) the light will be On (Fig. 1). Across the normally closed terminals (#1 and #2) the light will be Off.

ADJUSTING INSTRUCTIONS

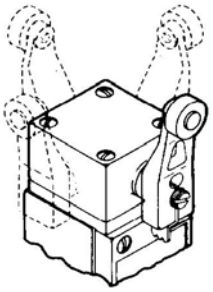

Actuator head. For application flexibility, actuator head may be positioned in any of four directions. Loosen the four captive head screws, place head in the desired position, and then securely tighten the four screws.

Reversing the roller lever. Except for the offset roller levers, the roller arm may be reversed to face the roller to the inside or outside of the arm.

Teller Tab

Positioning Lever. Lever on rotary actuated units is adjustable through 360° around the shaft. Loosen the screw with a 9/64 inch hexagon key wrench, move lever to desired position and securely tighten the screw until "teller tab" can no longer be moved by hand. Then tighten the screw another 1/8 to 1/4 turn to assure lever is tight on the shaft. Hexagon key wrenches are provided in adjusting tool set LSZ4005 for this purpose.

Adjustable Length Levers. A hexagon key wrench is required to adjust length of adjustable levers.

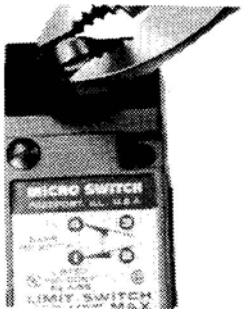

Top Roller Plunger. Position top roller plunger in desired roller plane by adjusting the head as explained under Actuator Head.

Side Roller Plunger. Grasp roller with pliers and rotate it to desired horizontal or vertical plane.

CHANGING DIRECTION OF ACTUATION

Side Rotary. LSM (center neutral) and LSN (maintained) listings operate in both directions and cannot be changed. Listings with the first three letters LSA, LSH, LSL, LSP, LSU, and LSR may be changed to operate clockwise, counterclockwise or both. NOTE: Instructions for adjusting switch operation are cast into the hinged cover (Fig. 2). To change, follow these steps:

1. Loosen the head screws and remove the head from the switch housing.
2. On the bottom of the head, insert a screwdriver in slot provided (Fig. 2) and lift open hinged cover.
3. Referring to Fig. 3, slide cam all the way back, so cam is free to rotate on the shaft.
4. Using a screwdriver or similar tool, rotate cam to desired actuating position (Fig. 4, 5, and 6.)
5. Slide cam all the way forward to its original position, and close hinged cover.
6. Replace operating head on switch housing and securely tighten head screws.

Figure 2

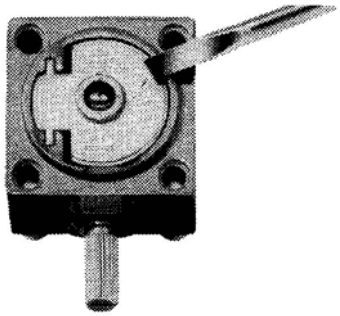

Figure 3

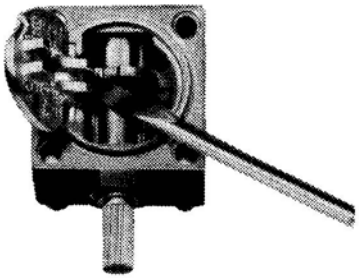

Figure 4

Cam Lobes
For CW
For CCW

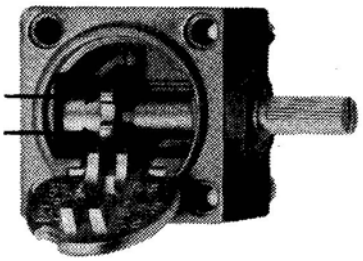

Figure 5

Cam Lobe
For CW

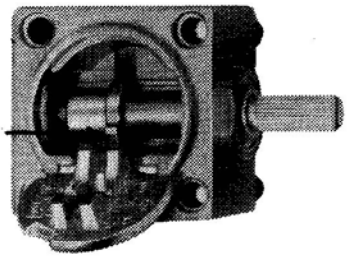

Figure 6

Cam Lobe
For CCW

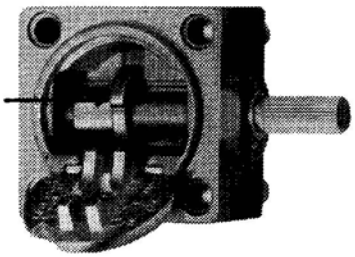

Top Rotary. Follow these steps to change operating direction of LSB type switches:

1. Loosen head screws and remove head from the switch housing.
2. From bottom of head grasp end of pin plunger and remove pin. It may be necessary to rotate actuating shaft to expose end of pin plunger.
3. Refer to Fig. 8 and select correct pin plunger position for desired direction of actuation.
4. Insert the pin plunger in the position providing desired direction of actuation.
5. Replace the operating head on switch housing and securely tighten head screws.

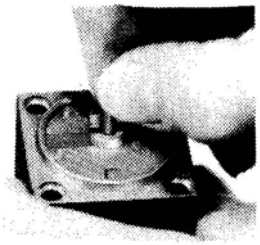

CW And CCW

CCW Only

CW Only

Plug-in Type

Catalog Listing* on Switch Nameplate	Complete Plug-in Unit Less Base Receptacle	Plug-inBase Recept. Only	Operating Head Only	Contact Block (Basic Switch Only)
LSA1A	LSZ7A1A	LSZ4001	LSZ1A	LSZ3A
LSA1J	LSZ7A1J	LSZ4001	LSZ1A	LSZ3J
LSA2B	LSZ7A2B	LSZ4002	LSZ1A	LSZ3B
LSB1A	LSZ7B1A	LSZ4001	LSZ1B	LSZ3A
LSC1A	LSZ7C1A	LSZ4001	LSZ1C	LSZ3A
LSC1J	LSZ7C1J	LSZ4001	LSZ1C	LSZ3J
LSD1A	LSZ7D1A	LSZ4001	LSZ1D	LSZ3A
LSD1J	LSZ7D1J	LSZ4001	LSZ1D	LSZ3J
LSD2B	LSZ7D2B	LSZ4002	LSZ1D	LSZ3B
LSE1A	LSZ7E1A	LSZ4001	LSZ1E	LSZ3A
LSE1J	LSZ7E1J	LSZ4001	LSZ1E	LSZ3J
LSE2B	LSZ7E2B	LSZ4002	LSZ1E	LSZ3B
LSF1A	LSZ7F1A	LSZ4001	LSZ1F	LSZ3A
LSF1J	LSZ7F1J	LSZ4001	LSZ1F	LSZ3J
LSF2B	LSZ7F2B	LSZ4002	LSZ1F	LSZ3B
LSH1A	LSZ7H1A	LSZ4001	LSZ1H	LSZ3A
LSH1J	LSZ7H1J	LSZ4001	LSZ1H	LSZ3J
LSH2B	LSZ7H2B	LSZ4002	LSZ1H	LSZ3B
LSJ1A-7A	LSZ7J1A-7A	LSZ4001	LSZ1JGA	LSZ3A
LSJ1A-7M	LSZ7J1A-7M	LSZ4001	LSZ1JGM	LSZ3A
LSJ2B-7A	LSZ7J2B-7A	LSZ4002	LSZ1JGA	LSZ3B
LSJ2B-7M	LSZ7J2B-7M	LSZ4002	LSZ1JGM	LSZ3B
LSK1A-8A	LSZ7K1A-8A	LSZ4001	LSZ1KHA	LSZ3A
LSK2B-8A	LSZ7K2B-8A	LSZ4002	LSZ1KHA	LSZ3B
LSL2C	LSZ7L2C	LSZ4002	LSZ1L	LSZ3C
LSM2D	LSZ7M2D	LSZ4002	LSZ1M	LSZ3C
LSN1A	LSZ7N1A	LSZ4001	LSZ1N	**
LSN2B	LSZ7N2B	LSZ4002	LSZ1N	**
LSP1A	LSZ7P1A	LSZ4001	LSZ1P	LSZ3A
LSP1J	LSZ7P1J	LSZ4001	LSZ1P	LSZ3J
LSP2B	LSZ7P2B	LSZ4002	LSZ1P	LSZ3B
LSR1A	LSZ7R1A	LSZ4001	LSZ1R	LSZ3A
LSR1J	LSZ7R1A	LSZ4001	LSZ1R	LSZ3J
LSH2B	LSZ7R2B	LSZ4002	LSZ1R	LSZ3B
LSU1A	LSZ7U1A	LSZ4001	LSZ1U	LSZ3A
LSV1A	LSZ7V1A	LSZ4001	LSZ1V	LSZ3J
LSV1J	LSZ7V1J	LSZ4001	LSZ1V	LSZ3A
LSV5A	LSZ7V5A	LSZ4001	LSZ1V	LSZ3A
LSV8A	LSZ7V8A	LSZ4001	LSZ1V	LSZ3A

REPLACEMENT PARTS

Should your specific switch catalog listing not appear in this parts list, contact nearest MICRO SWITCH Authorized distributor or MICRO SWITCH sales office.

For ease of making switch adjustments which may be necessary on various switch listings, order LSZ4005 (lever and switch adjusting tool set). This set consists of a special 3/32" open wrench and necessary hexagon key wrenches to adjust all types of levers.

Hex head screws. If you prefer to loosen and tighten lever with a pliers or screwdriver, order 15PA164-LS (packet of 50 hexhead screws with screwdriver slot) to replace screws furnished with the lever.

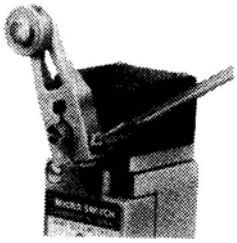

Replacement Levers. To order replacement levers, order the same part number that is metal stamped on either lever or lever hub. For other lever variations, refer to HDLS in Catalog 40.

Non Plug-in Type

Catalog Listing on Switch Nameplate	Operating Head Only	Contact Block (Basic Switch Only)
LSA3K	LSZ1A	LSZ3K
LAS4L	LSZ1A	LSZ3L
LSB3K	LSZ1B	LSZ3K
LSB4L	LSZ1B	LSZ3L
LSC3K	LSZ1C	LSZ3K
LSC4L	LSZ1C	LSZ3L
LSD3K	LSZ1D	LSZ3K
LSD4L	LSZ1D	LSZ3L
LSE3K	LSZ1E	LSK3K
LSE4L	LSZ1E	LSZ3L
LSF3K	LSZ1F	LSZ3K
LSF4L	LSZ1F	LSZ3L
LSG3K	LSF1G	**
LSH3K	LSZ1H	LSZ3K
LSH4L	LSZ1H	LSZ3 L
LSJ3K-7A	LSZ1JGA	LSZ3 L
LSJ3K-7M	LSZ1JGM	LSZ3 K
LSJ4L-7A	LSZ1JGA	LSZ3 L
LSJ4L-7M	LSZ1JGM	LSZ3 L
LSK3K-8A	LSZ1KHA	LSZ3 K
LSK4L-8A	LSZ1KHA	LSZ3 L
LSL4M	LSZ1L	LSZ3 M
LSM4N	LSZ1M	LSZ3M
LSN3K	LSZ1N	**
LSN4L	LSZ1N	* *
LSP3K	LSZ1P	LSZ3 K
LSP4L	LSZ1P	LSZ3 L
LSR3K	LSZ1R	LSZ3 K
LSR4L	LSZ1R	LSZ3 L
LSU3K	LSZ1U	LSZ3 K

*Only the listing portion which determines the replacement part is shown. Listings with -7A, -7M, or -8A are complete listings.
**Not user-replaceable.

REPLACEMENT PARTS - Continued

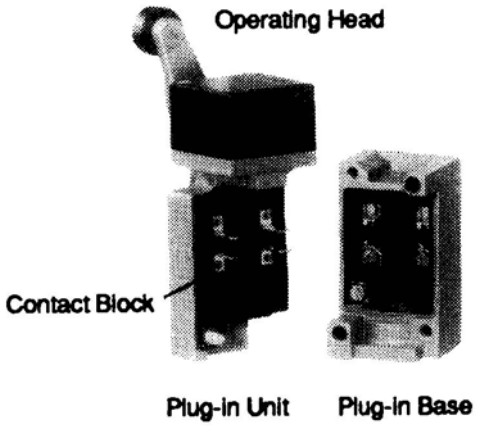

Replacement Parts for gravity return LSS1H, extra/low torque LST1H and two examples of a standard size rotary LSA1A type (LSYAC1A with Viton seals and LSYAB1A low temperature version) are listed below.

Catalog Listing	Plug-in Units Only	Base Receptacle	Operating Head	Contact Block
LSS1H	LSZ7S1H	LSZ4001	LSZ1S	LSZ3H
LST1H	LSZ7T1H	LSZ4001	LSZ1T	LSZ3H
LSYAB1A	LSZ7YAB1A	LSZ4001	LSZ1AB	LSZ3A
LSYAC1A	LSZ7YAC1A	LSA4001	LSZ1AC	LSZ3A

GRAVITY RETURN HDLS

Listings beginning with LSS are gravity return devices. During installation and setup, note the following:

1. Operate and release points exchange locations when shaft is rotated 180° (Fig. 9).
2. Switch is near operate-release points when shaft slot is parallel to switch's long axis (Fig. 9).
3. The switch should be installed so gravity return of the actuator releases the switch.

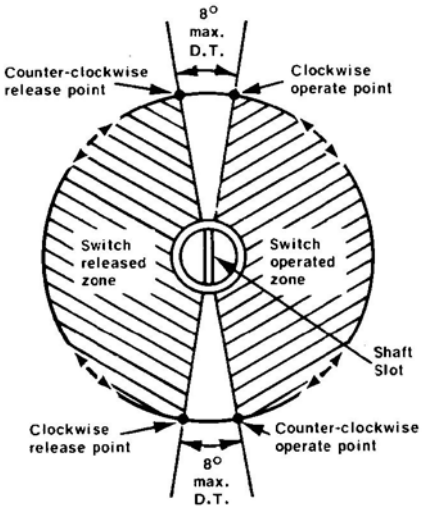

PROPER APPLICATION OF LIMIT SWITCHES

To achieve greatest reliability and longest life possible, limit switches should be installed as outlined in NEMA ICS2-225.

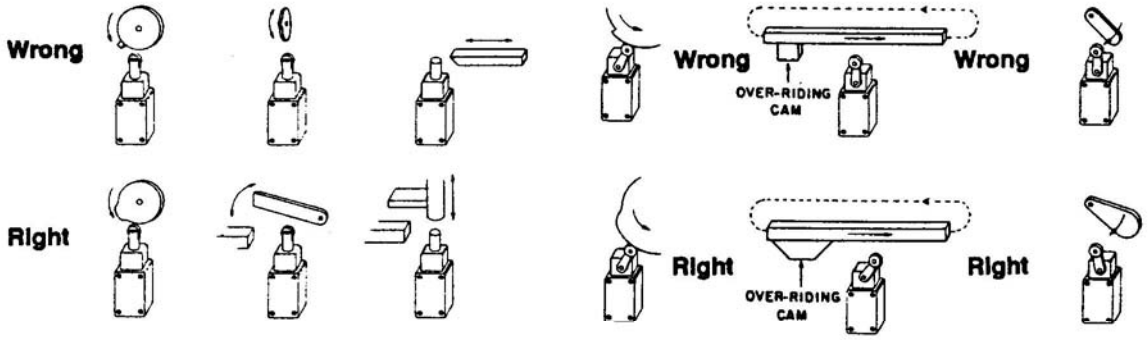

WARRANTY/REMEDY

Honeywell warrants goods of its manufacture as being free of defective materials and faulty workmanship. Honeywell's standard product warranty applies unless agreed to otherwise by Honeywell in writing; please refer to your order acknowledgement or consult your local sales office for specific warranty details. If warranted goods are returned to Honeywell during the period of coverage, Honeywell will repair or replace, at its option, without charge those items it finds defective. **The foregoing is buyer's sole remedy and is in lieu of all other warranties, expressed or implied, including those of merchantability and fitness for a particular purpose. In no event shall Honeywell be liable for consequential, special, or indirect damages.**

While we provide application assistance personally, through our literature and the Honeywell web site, it is up to the customer to determine the suitability of the product in the application.

Specifications may change without notice. The information we supply is believed to be accurate and reliable as of this printing. However, we assume no responsibility for its use.

SALES AND SERVICE

Honeywell serves its customers through a worldwide network of sales offices, representatives and distributors. For application assistance, current specifications, pricing or name of the nearest Authorized Distributor, contact your local sales office or:

E-mail: info.sc@honeywell.com
Internet: www.honeywell.com/sensing
Phone and Fax:

Asia Pacific	+65 6355-2828
	+65 6445-3033 Fax
Europe	+44 (0) 1698 481481
	+44 (0) 1698 481676 Fax
Latin America	+1-305-805-8188
	+1-305-883-8257 Fax
USA/Canada	+1-800-537-6945
	+1-815-235-6847
	+1-815-235-6545 Fax

Automation and Control Solutions
Sensing and Control
Honeywell
1985 Douglas Drive North
Minneapolis, MN 55422
www.honeywell.com/sensing

Honeywell

PK 81116 Issue 2 IL50 GLO Printed in USA
January 20064
© 2006 Honeywell International Inc.