THIS DRAWING IS UNPUBLISHED. RELEASED FOR PUBLICATION 20
© COPYRIGHT 20 BY - ALL RIGHTS RESERVED.

REVISIONS

P	LTR	DESCRIPTION	DATE	DWN	APVD
	C2	REVISED PER ECR-16-011494	20JUN2017	NK	CX

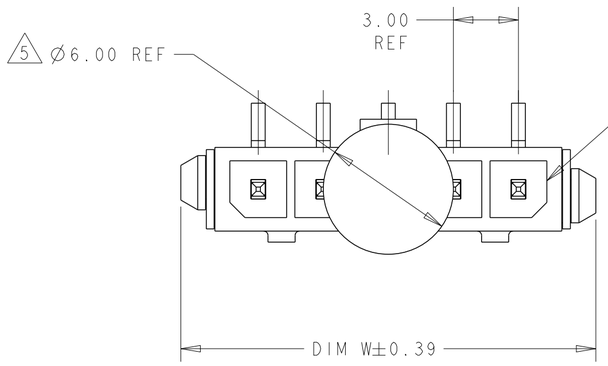

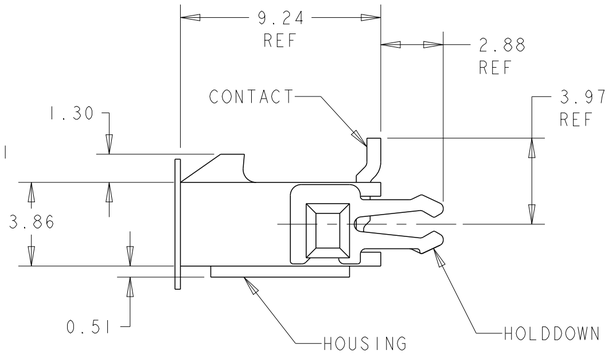

1 MATERIAL: CONTACTS - BRASS
HOUSING - UL 94V-0 RATED HIGH TEMP NYLON, COLOR BLACK.
HOLDDOWNS: - PHOSPHOR BRONZE.

2 PLATING: CONTACTS - 2.54µm MINIMUM TIN-LEAD OVER 1.27µm MINIMUM NICKEL.
HOLDDOWNS: 2.54µm MINIMUM TIN-LEAD OVER 1.27µm MINIMUM NICKEL.

4 RECOMMENDED PC BOARD THICKNESS OF 1.57.

5 KAPTON VACUUM PICK UP BUTTON.

6 PLATING: CONTACTS - 2.54µm MINIMUM MATTE TIN OVER 1.27µm MINIMUM NICKEL.
HOLDDOWNS: 2.54µm MINIMUM MATTE TIN OVER 1.27µm MINIMUM NICKEL.

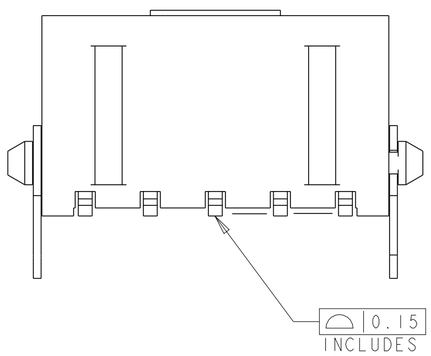

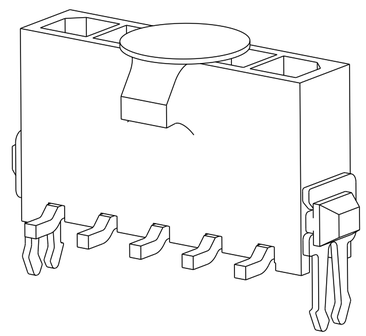

	6	33.00	37.43	40.00	12	3-1445052-2
	6	30.00	34.43	37.00	11	3-1445052-1
	6	27.00	31.43	34.00	10	3-1445052-0
	6	24.00	28.43	31.00	9	2-1445052-9
	6	21.00	25.43	28.00	8	2-1445052-8
	6	18.00	22.43	25.00	7	2-1445052-7
	6	15.00	19.43	22.00	6	2-1445052-6
	6	12.00	16.43	19.00	5	2-1445052-5
	6	9.00	13.43	16.00	4	2-1445052-4
	6	6.00	10.43	13.00	3	2-1445052-3
	6	3.00	7.43	10.00	2	2-1445052-2
SUPERSEDED BY 3-1445052-2	2	33.00	37.43	40.00	12	~~1-1445052-2~~
SUPERSEDED BY 3-1445052-1	2	30.00	34.43	37.00	11	~~1-1445052-1~~
SUPERSEDED BY 3-1445052-0	2	27.00	31.43	34.00	10	~~1-1445052-0~~
SUPERSEDED BY 2-1445052-9	2	24.00	28.43	31.00	9	~~1445052-9~~
SUPERSEDED BY 2-1445052-8	2	21.00	25.43	28.00	8	~~1445052-8~~
SUPERSEDED BY 2-1445052-7	2	18.00	22.43	25.00	7	~~1445052-7~~
SUPERSEDED BY 2-1445052-6	2	15.00	19.43	22.00	6	~~1445052-6~~
SUPERSEDED BY 2-1445052-5	2	12.00	16.43	19.00	5	~~1445052-5~~
SUPERSEDED BY 2-1445052-4	2	9.00	13.43	16.00	4	~~1445052-4~~
SUPERSEDED BY 2-1445052-3	2	6.00	10.43	13.00	3	~~1445052-3~~
SUPERSEDED BY 2-1445052-2	2	3.00	7.43	10.00	2	~~1445052-2~~
	FINISH	DIM Z	DIM V	DIM W	NO. OF POSN	PART NUMBER

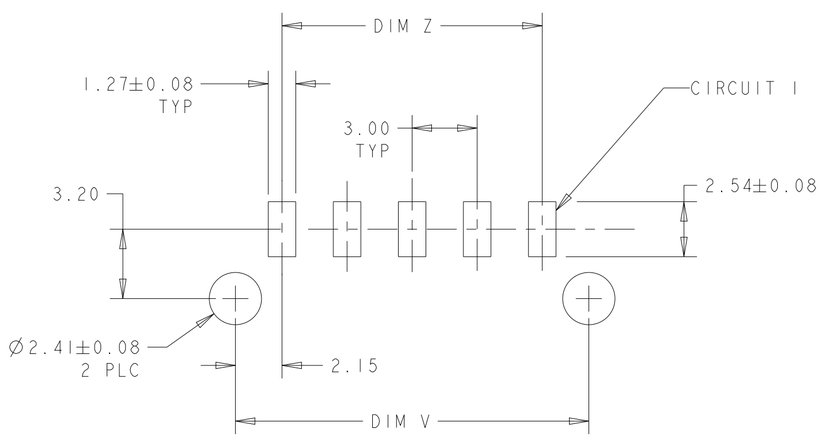

PCB LAYOUT COMPONENT SIDE 4

THIS DRAWING IS A CONTROLLED DOCUMENT.

DIMENSIONS: mm

TOLERANCES UNLESS OTHERWISE SPECIFIED:
0 PLC ±-
1 PLC ±-
2 PLC ±0.13
3 PLC ±-
4 PLC ±-
ANGLES ±-

MATERIAL 1

FINISH SEE TABLE

DWN J.ROOT 07OCT2000
CHK K. WHITAKER 20-FEB-2001
APVD C. JONES 20-FEB-2001
PRODUCT SPEC -
APPLICATION SPEC -
WEIGHT -

TE Connectivity

NAME VERTICAL SURFACE MOUNT HEADER ASSY TIN CONTACTS, W/THRU HOLE HOLDDOWNS, SINGLE ROW, MICRO MATE-N-LOK TM

SIZE	CAGE CODE	DRAWING NO	RESTRICTED TO
A2	00779	C-1445052	-

CUSTOMER DRAWING SCALE 5:1 SHEET 1 OF 1 REV C2

1471-9 (3/13)