THIS DRAWING IS UNPUBLISHED. RELEASED FOR PUBLICATION -,- .
© COPYRIGHT - By - ALL RIGHTS RESERVED.

REVISIONS

P	LTR	DESCRIPTION	DATE	DWN	APVD
	Z1	REVISED PER ECO-15-016019	06NOV2015	RZ	RS

1. COPPER PER ASTM-B-152

2. SILVER PLATE PER QQ-S-365, .000200 [5.08um] MIN THICKNESS.

3. TIN-LEAD PLATE PER ASTM-B-545, .000100 [2.54um] MIN THICKNESS.

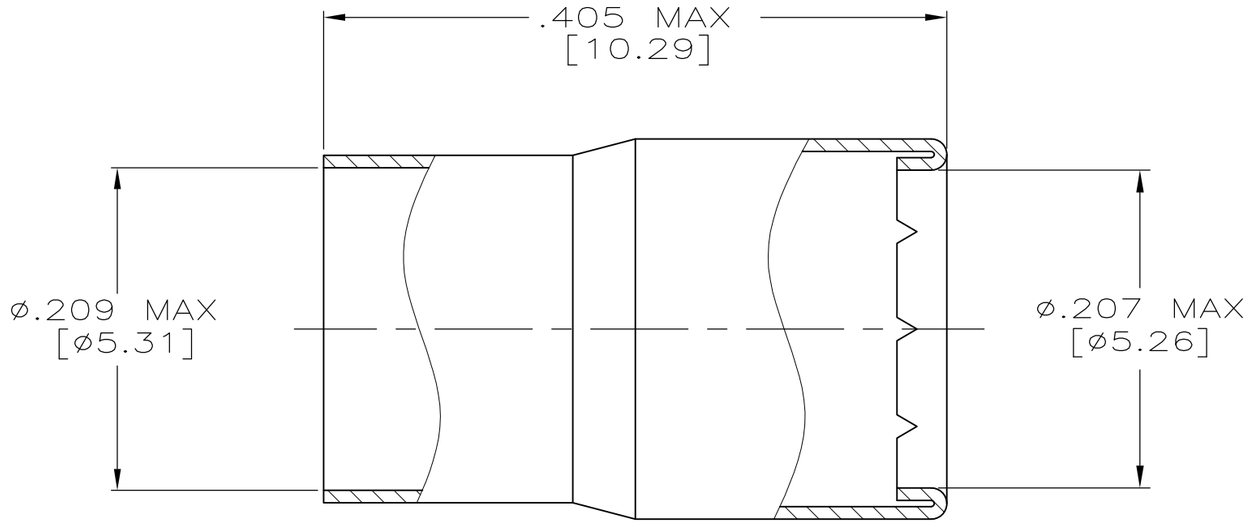

		FINISH	PART NUMBER
		2	9-328663-0
	OBSOLETE	3	2-328663-4
REPLACED BY 9-328663-0	OBSOLETE	2	328663

THIS DRAWING IS A CONTROLLED DOCUMENT.

DIMENSIONS: INCHES

TOLERANCES UNLESS OTHERWISE SPECIFIED:
0 PLC ± -
1 PLC ± -
2 PLC ± -
3 PLC ± -
4 PLC ± -
ANGLES ± -

MATERIAL: SEE ABOVE

FINISH: -

DWN MICHAEL E. COWHER 14NOV95
CHK FRANK MORANA -
APVD FRANK MORANA -
PRODUCT SPEC —
APPLICATION SPEC —
WEIGHT —

TE Connectivity

NAME: FERRULE STEP DOWN -

SIZE	CAGE CODE	DRAWING NO	RESTRICTED TO
A3	00779	C-328663	—

CUSTOMER DRAWING

SCALE 10:1 SHEET 1 OF 1 REV Z1

1470-19 (1/15)