# DATASHEET

## TEN CHANNEL HD AUDIO CODEC

## 92HD68F

***Low Power Optimized for ECR15b and EuP***

## Description

The 92HD68F is a low power optimized, high fidelity, 10-channel audio codec compatible with Intel's High Definition (HD) Audio Interface.

The 92HD68F provides full rate lossless audio playback from Blu-ray or other protected content with stereo 24-bit resolution and sample rates up to 192kHz.

The 92HD68F provides high quality, HD Audio capability to notebook and desktop PC applications.

## Features

- **10 Channels (5 stereo DACs and 2 stereo ADCs) with 24-bit resolution**
  - Supports full-duplex 7.1 audio and simultaneous VoIP
- **Supports full rate lossless audio playback from blu-ray or other protected audio content**
- **ECR 15b and EuP low power support**
- **Microsoft WLP premium logo compliant, per Logo Point**
- **8 analog ports with port presence detect + CD In**
- **3 integrated headphone amps**
- **4 adjustable VREF Out pins for microphone bias**
- **Dual SPDIF for WLP compliant support of simultaneous HDMI and SPDIF output**
- **SPDIF Input**
- **Digital microphone input (mono or stereo or quad)**
- **High performance analog mixer**
- **Support for 1.5V and 3.3V HDA signaling**
- **Digital and Analog PC Beep to all outputs**
- **48-pin QFP and 40-pad QFN RoHS packages**

## Block Diagram

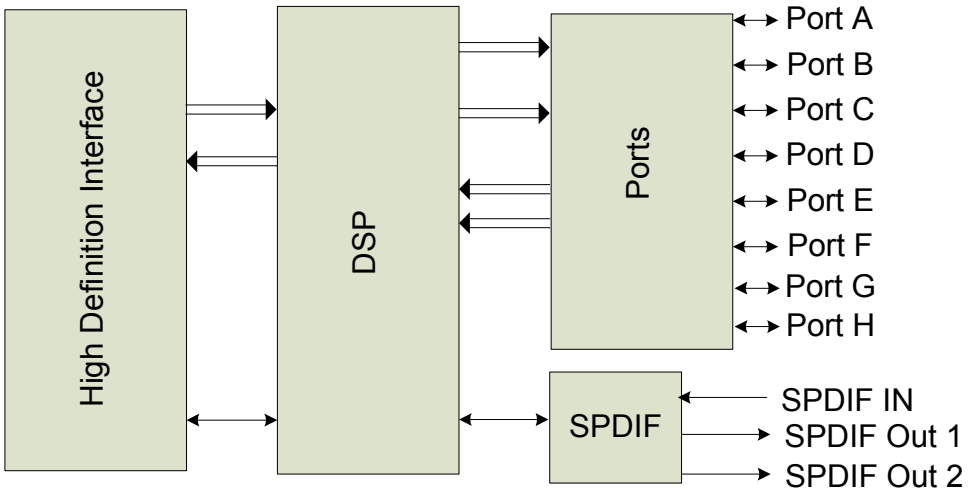



.©2014 TEMPO SEMICONDCUTOR, INC.

## Software Support

- Intuitive TSI HD Sound graphical user interface that allows configurability and preference settings
- 12 band fully parametric equalizer
  - Constant, system-level effects tuned to optimize a particular platform can be combined with user-mode “presets” tailored for specific acoustical environments and applications
  - System-level effects automatically disabled when external audio connections made
- Dynamics Processing
  - Enables improved voice articulation
  - Compressor/limiter allows higher average volume level without resonances or damage to speakers.
- TSI Vista APO wrapper
  - Enables multiple APOs to be used with the TSI Driver
- Microphone Beam Forming, Acoustic Echo Cancellation, and Noise Suppression
- Dynamic Stream Switching
  - Improved multi-streaming user experience with less support calls
- Broad 3rd party branded software including Creative, Dolby, DTS, and SRS
- Smart Configuration Suite (SCS) improves time to market and software quality
  - Online pin and feature configuration tool generates BIOS verb table for Windows and Linux.
  - Downloadable WHQL compliant, self configurable driver for XP, Vista and Win7 based on verb table and test files generated.
  - BIOS verb tables can be tested with the self configurable driver prior to flashing into BIOS.


©2014 TEMPO SEMICONDCUTOR, INC..

# TABLE OF CONTENTS

**1. DESCRIPTION ..... 12**
1.1. Overview ..... 12
1.2. Orderable Part Numbers ..... 12
1.3. Block Diagram ..... 13
**2. DETAILED DESCRIPTION ..... 14**
2.1. Port Functionality ..... 14
2.1.1. Port Characteristics ..... 15
2.1.2. Vref_Out ..... 16
2.1.3. Jack Detect ..... 16
2.1.4. SPDIF Output ..... 16
2.2. SPDIF Input ..... 18
2.3. Analog Mixer ..... 19
2.4. Input Multiplexers ..... 20
2.5. ADC Multiplexers ..... 20
2.6. Power Management ..... 20
2.7. AFG D0 ..... 21
2.8. AFG D1 ..... 21
2.9. AFG D2 ..... 22
2.10. AFG D3 ..... 22
2.10.1. AFG D3cold ..... 22
2.11. Vendor Specific Function Group Power States D4/D5 ..... 22
2.12. Low-voltage HDA Signaling ..... 23
2.13. Multi-channel capture ..... 23
2.14. Digital Microphone Support ..... 25
2.15. Analog PC-Beep ..... 30
2.16. Digital PC-Beep ..... 32
2.17. Headphone Drivers ..... 32
2.18. EAPD ..... 33
2.19. GPIO ..... 35
2.19.1. GPIO Pin mapping and shared functions ..... 35
2.19.2. SPDIF/GPIO Selection ..... 35
2.19.3. Digital Microphone/GPIO Selection ..... 36
2.19.4. Vref_Out/GPIO Selection ..... 36
2.19.5. EAPD/SPDIF_IN/SPDIF_OUT/GPIO0 Selection ..... 36
2.20. HD Audio ECR 15b support ..... 36
2.21. Digital Core Voltage Regulator ..... 36
**3. CHARACTERISTICS ..... 38**
3.1. Electrical Specifications ..... 38
3.1.1. Absolute Maximum Ratings ..... 38
3.1.2. Recommended Operating Conditions ..... 38
3.2. 92HD68F Analog Performance Characteristics ..... 39
3.3. AC Timing Specs ..... 43
3.3.1. HD Audio Bus Timing ..... 43
3.3.2. SPDIF Timing ..... 43
3.3.3. Digital Microphone Timing ..... 44
3.3.4. GPIO Characteristics ..... 44
**4. FUNCTIONAL BLOCK DIAGRAMS ..... 45**
4.1. 48QFP ..... 45
4.2. 40QFN ..... 46
**5. WIDGET BLOCK DIAGRAM ..... 47**
**6. PORT CONFIGURATIONS ..... 48**
6.1. Pin Configuration Default Register Settings ..... 49
**7. WIDGET INFORMATION ..... 50**
7.1. Widget List ..... 51
7.2. Root (NID = 00h): VendorID ..... 52
7.3. Root (NID = 00h): RevID ..... 53
7.3.1. Root (NID = 00h): NodeInfo ..... 53


©2014 TEMPO SEMICONDCUTOR, INC..

7.4. AFG (NID = 01h): NodeInfo ..... 54
7.4.1. AFG (NID = 01h): FGType ..... 55
7.4.2. AFG (NID = 01h): AFGCap ..... 55
7.4.3. AFG (NID = 01h): PCMCap ..... 56
7.4.4. AFG (NID = 01h): StreamCap ..... 58
7.4.5. AFG (NID = 01h): InAmpCap ..... 58
7.4.6. AFG (NID = 01h): PwrStateCap ..... 59
7.4.7. AFG (NID = 01h): GPIOCnt ..... 60
7.4.8. AFG (NID = 01h): OutAmpCap ..... 61
7.4.9. AFG (NID = 01h): PwrState ..... 62
7.4.10. AFG (NID = 01h): UnsolResp ..... 63
7.4.11. AFG (NID = 01h): GPIO ..... 63
7.4.12. AFG (NID = 01h): GPIOEn ..... 64
7.4.13. AFG (NID = 01h): GPIODir ..... 65
7.4.14. AFG (NID = 01h): GPIOWakeEn ..... 66
7.4.15. AFG (NID = 01h): GPIOUnsol ..... 68
7.4.16. AFG (NID = 01h): GPIOSticky ..... 69
7.4.17. AFG (NID = 01h): SubID ..... 70
7.4.18. AFG (NID = 01h): GPIOPlrty ..... 70
7.4.19. AFG (NID = 01h): GPIODrive ..... 72
7.4.20. AFG (NID = 01h): DMic ..... 73
7.4.21. AFG (NID = 01h): DACMode ..... 74
7.4.22. AFG (NID = 01h): ADCMode ..... 76
7.4.23. AFG (NID = 01h): EAPD ..... 76
7.4.24. AFG (NID = 01h): PortUse ..... 78
7.4.25. AFG (NID = 01h): VSPwrState ..... 79
7.4.26. AFG (NID = 01h): AnaPort ..... 79
7.4.27. AFG (NID = 01h): AnaBeep ..... 80
7.4.28. AFG (NID = 01h): Reset ..... 81
7.5. PortA (NID = 0Ah): WCap ..... 82
7.5.1. PortA (NID = 0Ah): PinCap ..... 83
7.5.2. PortA (NID = 0Ah): ConLst ..... 85
7.5.3. PortA (NID = 0Ah): ConLstEntry0 ..... 85
7.5.4. PortA (NID = 0Ah): InAmpLeft ..... 86
7.5.5. PortA (NID = 0Ah): InAmpRight ..... 86
7.5.6. PortA (NID = 0Ah): ConSelectCtrl ..... 87
7.5.7. PortA (NID = 0Ah): PwrState ..... 87
7.5.8. PortA (NID = 0Ah): PinWCntrl ..... 88
7.5.9. PortA (NID = 0Ah): UnsolResp ..... 89
7.5.10. PortA (NID = 0Ah): ChSense ..... 90
7.5.11. PortA (NID = 0Ah): EAPDBTLLR ..... 90
7.5.12. PortA (NID = 0Ah): ConfigDefault ..... 91
7.6. PortB (NID = 0Bh): WCap ..... 94
7.6.1. PortB (NID = 0Bh): PinCap ..... 95
7.6.2. PortB (NID = 0Bh): ConLst ..... 97
7.6.3. PortB (NID = 0Bh): ConLstEntry0 ..... 97
7.6.4. PortB (NID = 0Bh): ConSelectCtrl ..... 98
7.6.5. PortB (NID = 0Bh): InAmpLeft ..... 98
7.6.6. PortB (NID = 0Bh): InAmpRight ..... 99
7.6.7. PortB (NID = 0Bh): PwrState ..... 99
7.6.8. PortB (NID = 0Bh): PinWCntrl ..... 100
7.6.9. PortB (NID = 0Bh): UnsolResp ..... 101
7.6.10. PortB (NID = 0Bh): ChSense ..... 102
7.6.11. PortB (NID = 0Bh): EAPDBTLLR ..... 102
7.6.12. PortB (NID = 0Bh): ConfigDefault ..... 103
7.7. PortC (NID = 0Ch): WCap ..... 106
7.7.1. PortC (NID = 0Ch): PinCap ..... 107
7.7.2. PortC (NID = 0Ch): ConLst ..... 108
7.7.3. PortC (NID = 0Ch): ConLstEntry0 ..... 109


©2014 TEMPO SEMICONDCUTOR, INC..

7.7.4. PortC (NID = 0Ch): InAmpLeft ..... 110
7.7.5. PortC (NID = 0Ch): InAmpRight ..... 110
7.7.6. PortC (NID = 0Ch): ConSelectCtrl ..... 111
7.7.7. PortC (NID = 0Ch): PwrState ..... 111
7.7.8. PortC (NID = 0Ch): PinWCntrl ..... 112
7.7.9. PortC (NID = 0Ch): UnsolResp ..... 113
7.7.10. PortC (NID = 0Ch): ChSense ..... 113
7.7.11. PortC (NID = 0Ch): EAPDBTLLR ..... 114
7.7.12. PortC (NID = 0Ch): ConfigDefault ..... 114
7.8. PortD (NID = 0Dh): WCap ..... 118
7.8.1. PortD (NID = 0Dh): PinCap ..... 119
7.8.2. PortD (NID = 0Dh): ConLst ..... 121
7.8.3. PortD (NID = 0Dh): ConLstEntry0 ..... 121
7.8.4. PortD (NID = 0Dh): InAmpLeft ..... 122
7.8.5. PortD (NID = 0Dh): InAmpRight ..... 122
7.8.6. PortD (NID = 0Dh): ConSelectCtrl ..... 123
7.8.7. PortD (NID = 0Dh): PwrState ..... 123
7.8.8. PortD (NID = 0Dh): PinWCntrl ..... 124
7.8.9. PortD (NID = 0Dh): UnsolResp ..... 125
7.8.10. PortD (NID = 0Dh): ChSense ..... 125
7.8.11. PortD (NID = 0Dh): EAPDBTLLR ..... 126
7.8.12. PortD (NID = 0Dh): ConfigDefault ..... 126
7.9. PortE (NID = 0Eh): WCap ..... 130
7.9.1. PortE (NID = 0Eh): PinCap ..... 131
7.9.2. PortE (NID = 0Eh): ConLst ..... 133
7.9.3. PortE (NID = 0Eh): ConLstEntry0 ..... 133
7.9.4. PortE (NID = 0Eh): InAmpLeft ..... 134
7.9.5. PortE (NID = 0Eh): InAmpRight ..... 134
7.9.6. PortE (NID = 0Eh): ConSelectCtrl ..... 135
7.9.7. PortE (NID = 0Eh): PwrState ..... 135
7.9.8. PortE (NID = 0Eh): PinWCntrl ..... 136
7.9.9. PortE (NID = 0Eh): UnsolResp ..... 137
7.9.10. PortE (NID = 0Eh): ChSense ..... 137
7.9.11. PortE (NID = 0Eh): EAPDBTLLR ..... 138
7.9.12. PortE (NID = 0Eh): ConfigDefault ..... 138
7.10. PortF (NID = 0Fh): WCap ..... 142
7.10.1. PortF (NID = 0Fh): PinCap ..... 143
7.10.2. PortF (NID = 0Fh): ConLst ..... 145
7.10.3. PortF (NID = 0Fh): ConLstEntry0 ..... 145
7.10.4. PortF (NID = 0Fh): InAmpLeft ..... 146
7.10.5. PortF (NID = 0Fh): InAmpRight ..... 146
7.10.6. PortF (NID = 0Fh): ConSelectCtrl ..... 147
7.10.7. PortF (NID = 0Fh): PwrState ..... 147
7.10.8. PortF (NID = 0Fh): PinWCntrl ..... 148
7.10.9. PortF (NID = 0Fh): UnsolResp ..... 149
7.10.10. PortF (NID = 0Fh): ChSense ..... 149
7.10.11. PortF (NID = 0Fh): EAPDBTLLR ..... 150
7.10.12. PortF (NID = 0Fh): ConfigDefault ..... 150
7.11. PortG (NID = 10h): WCap ..... 153
7.11.1. PortG (NID = 10h): PinCap ..... 154
7.11.2. PortG (NID = 10h): ConLst ..... 156
7.11.3. PortG (NID = 10h): ConLstEntry0 ..... 156
7.11.4. PortG (NID = 10h): InAmpLeft ..... 157
7.11.5. PortG (NID = 10h): InAmpRight ..... 157
7.11.6. PortG (NID = 10h): ConSelectCtrl ..... 158
7.11.7. PortG (NID = 10h): PwrState ..... 158
7.11.8. PortG (NID = 10h): PinWCntrl ..... 159
7.11.9. PortG (NID = 10h): UnsolResp ..... 160
7.11.10. PortG (NID = 10h): ChSense ..... 160


©2014 TEMPO SEMICONDCUTOR, INC..

7.11.11. PortG (NID = 10h): EAPDBTLLR ..... 161
7.11.12. PortG (NID = 10h): ConfigDefault ..... 161
7.12. PortH (NID = 11h): WCap ..... 164
7.12.1. PortH (NID = 11h): PinCap ..... 165
7.12.2. PortH (NID = 11h): ConLst ..... 167
7.12.3. PortH (NID = 11h): ConLstEntry0 ..... 167
7.12.4. PortH (NID = 11h): InAmpLeft ..... 168
7.12.5. PortH (NID = 11h): InAmpRight ..... 168
7.12.6. PortH (NID = 11h): ConSelectCtrl ..... 169
7.12.7. PortH (NID = 11h): PwrState ..... 169
7.12.8. PortH (NID = 11h): PinWCntrl ..... 170
7.12.9. PortH (NID = 11h): UnsolResp ..... 171
7.12.10. PortH (NID = 11h): ChSense ..... 171
7.12.11. PortH (NID = 11h): EAPDBTLLR ..... 172
7.12.12. PortH (NID = 11h): ConfigDefault ..... 172
7.13. CD (NID = 12h): WCap ..... 175
7.13.1. CD (NID = 12h): PinCap ..... 176
7.13.2. CD (NID = 12h): PwrState ..... 178
7.13.3. CD (NID = 12h): PinWCntrl ..... 178
7.13.4. CD (NID = 12h): ConfigDefault ..... 179
7.14. DMic0 (NID = 13h): WCap ..... 182
7.14.1. DMic0 (NID = 13h): PinCap ..... 183
7.14.2. DMic0 (NID = 13h): InAmpLeft ..... 185
7.14.3. DMic0 (NID = 13h): InAmpRight ..... 185
7.14.4. DMic0 (NID = 13h): PwrState ..... 185
7.14.5. DMic0 (NID = 13h): PinWCntrl ..... 186
7.14.6. DMic0 (NID = 13h): UnsolResp ..... 187
7.14.7. DMic0 (NID = 13h): ConfigDefault ..... 187
7.15. DMic1 (NID = 14h): WCap ..... 191
7.15.1. DMic1 (NID = 14h): PinCap ..... 192
7.15.2. DMic1 (NID = 14h): InAmpLeft ..... 194
7.15.3. DMic1 (NID = 14h): InAmpRight ..... 194
7.15.4. DMic1 (NID = 14h): PwrState ..... 194
7.15.5. DMic1 (NID = 14h): PinWCntrl ..... 195
7.15.6. DMic1 (NID = 14h): UnsolResp ..... 196
7.15.7. DMic1 (NID = 14h): ConfigDefault ..... 196
7.16. DAC0 (NID = 15h): WCap ..... 200
7.16.1. DAC0 (NID = 15h): Cnvtr ..... 201
7.16.2. DAC0 (NID = 15h): OutAmpLeft ..... 203
7.16.3. DAC0 (NID = 15h): OutAmpRight ..... 203
7.16.4. DAC0 (NID = 15h): PwrState ..... 204
7.16.5. DAC0 (NID = 15h): CnvtrID ..... 204
7.16.6. DAC0 (NID = 15h): EAPDBTLLR ..... 205
7.17. DAC1 (NID = 16h): WCap ..... 206
7.17.1. DAC1 (NID = 16h): Cnvtr ..... 207
7.17.2. DAC1 (NID = 16h): OutAmpLeft ..... 209
7.17.3. DAC1 (NID = 16h): OutAmpRight ..... 209
7.17.4. DAC1 (NID = 16h): PwrState ..... 210
7.17.5. DAC1 (NID = 16h): CnvtrID ..... 210
7.17.6. DAC1 (NID = 16h): EAPDBTLLR ..... 211
7.18. DAC2 (NID = 17h): WCap ..... 212
7.18.1. DAC2 (NID = 17h): Cnvtr ..... 213
7.18.2. DAC2 (NID = 17h): OutAmpLeft ..... 215
7.18.3. DAC2 (NID = 17h): OutAmpRight ..... 215
7.18.4. DAC2 (NID = 17h): PwrState ..... 216
7.18.5. DAC2 (NID = 17h): CnvtrID ..... 216
7.18.6. DAC2 (NID = 17h): EAPDBTLLR ..... 217
7.19. DAC3 (NID = 18h): WCap ..... 218
7.19.1. DAC3 (NID = 18h): Cnvtr ..... 219


©2014 TEMPO SEMICONDCUTOR, INC..

7.19.2. DAC3 (NID = 18h): OutAmpLeft ....221
7.19.3. DAC3 (NID = 18h): OutAmpRight ....221
7.19.4. DAC3 (NID = 18h): PwrState ....222
7.19.5. DAC3 (NID = 18h): CnvtrID ....222
7.19.6. DAC3 (NID = 18h): EAPDBTLLR ....223
7.20. DAC4 (NID = 19h): WCap ....224
7.20.1. DAC4 (NID = 19h): Cnvtr ....225
7.20.2. DAC4 (NID = 19h): OutAmpLeft ....227
7.20.3. DAC4 (NID = 19h): OutAmpRight ....227
7.20.4. DAC4 (NID = 19h): PwrState ....228
7.20.5. DAC4 (NID = 19h): CnvtrID ....228
7.20.6. DAC4 (NID = 19h): EAPDBTLLR ....229
7.21. ADC0Mux (NID = 20h): WCap ....230
7.21.1. ADC0Mux (NID = 20h): ConLst ....231
7.21.2. ADC0Mux (NID = 17h): ConLstEntry4 ....232
7.21.3. ADC0Mux (NID = 20h): ConLstEntry0 ....232
7.21.4. ADC0Mux (NID = 20h): OutAmpCap ....233
7.21.5. ADC0Mux (NID = 20h): OutAmpLeft ....234
7.21.6. ADC0Mux (NID = 20h): OutAmpRight ....234
7.21.7. ADC0Mux (NID = 20h): ConSelectCtrl ....235
7.21.8. ADC0Mux (NID = 20h): PwrState ....235
7.21.9. ADC0Mux (NID = 20h): EAPDBTLLR ....236
7.22. ADC1Mux (NID = 21h): WCap ....238
7.22.1. ADC1Mux (NID = 21h): ConLst ....239
7.22.2. ADC1Mux (NID = 21h): ConLstEntry4 ....240
7.22.3. ADC1Mux (NID = 21h): ConLstEntry0 ....240
7.22.4. ADC1Mux (NID = 21h): OutAmpCap ....241
7.22.5. ADC1Mux (NID = 21h): OutAmpLeft ....242
7.22.6. ADC1Mux (NID = 21h): OutAmpRight ....242
7.22.7. ADC1Mux (NID = 21h): ConSelectCtrl ....243
7.22.8. ADC1Mux (NID = 21h): PwrState ....243
7.22.9. ADC1Mux (NID = 21h): EAPDBTLLR ....244
7.23. Dig0Pin (NID = 22h): WCap ....246
7.23.1. Dig0Pin (NID = 22h): PinCap ....247
7.23.2. Dig0Pin (NID = 22h): ConLst ....249
7.23.3. Dig0Pin (NID = 22h): ConLstEntry0 ....249
7.23.4. Dig0Pin (NID = 22h): PwrState ....250
7.23.5. Dig0Pin (NID = 22h): PinWCntrl ....251
7.23.6. Dig0Pin (NID = 22h): UnsolResp ....251
7.23.7. Dig0Pin (NID = 22h): ChSense ....252
7.23.8. Dig0Pin (NID = 22h): ConfigDefault ....252
7.24. Dig1Pin (NID = 23h): WCap ....255
7.24.1. Dig1Pin (NID = 23h): PinCap ....256
7.24.2. Dig1Pin (NID = 23h): ConLst ....258
7.24.3. Dig1Pin (NID = 20h): ConLstEntry0 ....258
7.24.4. Dig1Pin (NID = 23h): PwrState ....259
7.24.5. Dig1Pin (NID = 23h): PinWCntrl ....260
7.24.6. Dig1Pin (NID = 20h): ConfigDefault ....260
7.25. Dig2Pin (NID = 24h): WCap ....263
7.25.1. Dig2Pin (NID = 24h): PinCap ....264
7.25.2. Dig2Pin (NID = 24h): ConLst ....266
7.25.3. Dig1Pin (NID = 20h): ConLstEntry0 ....266
7.25.4. Dig2Pin (NID = 24h): PwrState ....267
7.25.5. Dig2Pin (NID = 24h): PinWCntrl ....268
7.25.6. Dig1Pin (NID = 20h): ConfigDefault ....268
7.26. SPDIFOut0 (NID = 25h): WCap ....271
7.26.1. SPDIFOut0 (NID = 25h): PCMCap ....272
7.26.2. SPDIFOut0 (NID = 25h): StreamCap ....274
7.26.3. SPDIFOut0 (NID = 25h): OutAmpCap ....275


©2014 TEMPO SEMICONDCUTOR, INC..

7.26.4. SPDIFOut0 (NID = 25h): Cnvtr ....275
7.26.5. SPDIFOut0 (NID = 25h): OutAmpLeft ....277
7.26.6. SPDIFOut0 (NID = 25h): OutAmpRight ....277
7.26.7. SPDIFOut0 (NID = 25h): PwrState ....278
7.26.8. SPDIFOut0 (NID = 25h): CnvtrID ....279
7.26.9. SPDIFOut0 (NID = 25h): DigCnvtr ....279
7.27. SPDIFOut1 (NID = 26h): WCap ....281
7.27.1. SPDIFOut1 (NID = 26h): PCMCap ....282
7.27.2. SPDIFOut1 (NID = 26h): StreamCap ....284
7.27.3. SPDIFOut1 (NID = 26h): OutAmpCap ....285
7.27.4. SPDIFOut1 (NID = 26h): Cnvtr ....285
7.27.5. SPDIFOut1 (NID = 26h): OutAmpLeft ....287
7.27.6. SPDIFOut1 (NID = 26h): OutAmpRight ....287
7.27.7. SPDIFOut1 (NID = 26h): PwrState ....288
7.27.8. SPDIFOut1 (NID = 26h): CnvtrID ....289
7.27.9. SPDIFOut1 (NID = 26h): DigCnvtr ....289
7.28. SPDIFIn (NID = 27h): WCap ....291
7.28.1. SPDIFIn (NID = 27h): PCMCap ....292
7.28.2. SPDIFIn (NID = 27h): StreamCap ....294
7.28.3. SPDIFIn (NID = 27h): Cnvtr ....295
7.28.4. SPDIFIn (NID = 27h): ConLst ....296
7.28.5. SPDIFIn (NID = 27h): ConLstEntry0 ....296
7.28.6. SPDIFIn (NID = 27h): PwrState ....297
7.28.7. SPDIFIn (NID = 27h): CnvtrID ....298
7.28.8. SPDIFIn (NID = 27h): DigCnvtr ....298
7.28.9. SPDIFIn (NID = 27h): InAmpCap ....300
7.28.10. SPDIFIn (NID = 27h): InAmpLeft ....301
7.28.11. SPDIFIn (NID = 27h): InAmpRight ....301
7.28.12. SPDIFIn (NID = 27h): VS ....301
7.29. InPort0Mux (NID = 28h): WCap ....305
7.29.1. InPort0Mux (NID = 28h): ConLst ....306
7.29.2. InPort0Mux (NID = 28h): ConLstEntry0 ....307
7.29.3. InPort0Mux (NID = 28h): ConSelectCtrl ....307
7.29.4. InPort0Mux (NID = 28h): PwrState ....308
7.30. InPort1Mux (NID = 29h): WCap ....310
7.30.1. InPort1Mux (NID = 29h): ConLst ....311
7.30.2. InPort1Mux (NID = 29h): ConLstEntry0 ....312
7.30.3. InPort1Mux (NID = 29h): ConSelectCtrl ....312
7.30.4. InPort1Mux (NID = 29h): PwrState ....313
7.31. ADC0 (NID = 1Ah): WCap ....315
7.31.1. ADC0 (NID = 1Ah): ConLst ....316
7.31.2. ADC0 (NID = 1Ah): ConLstEntry0 ....317
7.31.3. ADC0 (NID = 1Ah): Cnvtr ....317
7.31.4. ADC0 (NID = 1Ah): ProcState ....319
7.31.5. ADC0 (NID = 1Ah): PwrState ....320
7.31.6. ADC0 (NID = 1Ah): CnvtrID ....320
7.32. ADC1 (NID = 1Bh): WCap ....322
7.32.1. ADC1 (NID = 1Bh): ConLst ....323
7.32.2. ADC1 (NID = 1Bh): ConLstEntry0 ....324
7.32.3. ADC1 (NID = 1Bh): Cnvtr ....324
7.32.4. ADC1 (NID = 1Bh): ProcState ....326
7.32.5. ADC1 (NID = 1Bh): PwrState ....326
7.32.6. ADC1 (NID = 1Bh): CnvtrID ....327
7.33. DigBeep (NID = 1Ch): WCap ....329
7.33.1. DigBeep (NID = 1Ch): OutAmpCap ....330
7.33.2. DigBeep (NID = 1Ch): OutAmpLeft ....330
7.33.3. DigBeep (NID = 1Ch): PwrState ....331
7.33.4. DigBeep (NID = 1Ch): Gen ....332
7.34. Mixer (NID = 1Dh): WCap ....333


©2014 TEMPO SEMICONDCUTOR, INC..

7.34.1. Mixer (NID = 1Dh): InAmpCap ....334
7.34.2. Mixer (NID = 1Dh): ConLst ....335
7.34.3. Mixer (NID = 1Dh): ConLstEntry0 ....336
7.34.4. Mixer (NID = 1Dh): InAmpLeft0 ....336
7.34.5. Mixer (NID = 1Dh): InAmpRight0 ....337
7.34.6. Mixer (NID = 1Dh): InAmpLeft1 ....337
7.34.7. Mixer (NID = 1Dh): InAmpRight1 ....338
7.34.8. Mixer (NID = 1Dh): InAmpLeft2 ....339
7.34.9. Mixer (NID = 1Dh): InAmpRight2 ....339
7.34.10. Mixer (NID = 1Dh): InAmpLeft3 ....340
7.34.11. Mixer (NID = 1Dh): InAmpRight3 ....340
7.34.12. Mixer (NID = 1Dh): InAmpLeft4 ....341
7.34.13. Mixer (NID = 1Dh): InAmpRight4 ....341
7.34.14. Mixer (NID = 1Dh): PwrState ....342
7.35. MixerOutVol (NID = 1Eh): WCap ....344
7.35.1. MixerOutVol (NID = 1Eh): ConLst ....345
7.35.2. MixerOutVol (NID = 1Eh): ConLstEntry0 ....346
7.35.3. MixerOutVol (NID = 1Dh): OutAmpCap ....346
7.35.4. MixerOutVol (NID = 1Dh): OutAmpLeft ....347
7.35.5. MixerOutVol (NID = 1Dh): OutAmpRight ....348
7.35.6. MixerOutVol (NID = 1Dh): PwrState ....348
7.36. Vendor Reserved (NID = 1Fh) ....350
7.37. InPort2Mux (NID = 2Ah): WCap ....351
7.37.1. InPort2Mux (NID = 2Ah): ConLst ....352
7.37.2. InPort2Mux (NID = 2Ah): ConLstEntry0 ....353
7.37.3. InPort2Mux (NID = 2Ah): ConSelectCtrl ....353
7.37.4. InPort2Mux (NID = 2Ah): PwrState ....354
7.38. InPort3Mux (NID = 2Bh): WCap ....356
7.38.1. InPort3Mux (NID = 2Bh): ConLst ....357
7.38.2. InPort3Mux (NID = 2Bh): ConLstEntry0 ....358
7.38.3. InPort3Mux (NID = 2Bh): ConSelectCtrl ....358
7.38.4. InPort3Mux (NID = 2Bh): PwrState ....359
**8. PINOUTS AND PACKAGING .... 361**
8.1. 48QFP ....361
8.1.1. 48 QFP Pin Assignment ....361
8.1.2. 48QFP Pin Table ....361
8.1.3. 48QFP Package Outline and Package Dimensions ....364
8.2. 40QFN ....366
8.2.1. 40QFN Pin Assignment ....366
8.2.2. 40QFN Pin Table) ....367
8.2.3. 40QFN Package Outline and Package Dimensions ....368
8.3. 48QFP and 40QFN Standard Reflow Profile Data ....369
**9. DISCLAIMER .... 370**
**10. DOCUMENT REVISION HISTORY .... 371**


©2014 TEMPO SEMICONDCUTOR, INC..

# LIST OF FIGURES

Figure 1. 92HD68F Block Diagram ..... 13
Figure 2. System Diagram ..... 13
Figure 3. Multi-channel capture ..... 24
Figure 4. Multi-channel timing diagram ..... 24
Figure 5. Single Digital Microphone (data is ported to both left and right channels ..... 27
Figure 6. Stereo Digital Microphone Configuration ..... 28
Figure 7. Quad Digital Microphone Configuration ..... 29
Figure 8. HP EAPD Example to be replaced by single pin for internal amp ..... 35
Figure 9. HD Audio Bus Timing ..... 43
Figure 10. 48QFP Functional Block Diagram ..... 45
Figure 11. 40QFN Functional Block Diagram ..... 46
Figure 12. Widget Diagram (same for both package option) ..... 47
Figure 13. Port Configurations ..... 48
Figure 14. Pin Assignment ..... 361
Figure 15. 48QFP Package Diagram ..... 364
Figure 16. 48QFP Package Diagram (cont) ..... 365
Figure 17. Pin Assignment ..... 366
Figure 18. 40QFN Package Diagram ..... 368


©2014 TEMPO SEMICONDCUTOR, INC..

# LIST OF TABLES

Table 1. 48QFP Port Characteristics ..... 14
Table 2. 40QFN Port Characteristics ..... 14
Table 3. Analog Output Port Behavior ..... 15
Table 4. 48pin Jack Detect ..... 16
Table 5. 40pin Jack Detect ..... 16
Table 6. SPDIF OUT 0 Behavior ..... 17
Table 7. SPDIF OUT 1 Behavior ..... 18
Table 8. SPDIF Behavior ..... 19
Table 9. Input Multiplexers ..... 20
Table 10. Example channel mapping ..... 23
Table 12. Valid Digital Mic Configurations ..... 26
Table 13. DMIC_CLK and DMIC_0,1 Operation During Power State ..... 26
Table 14. Headphone Amp Enable Configuration ..... 33
Table 15. EAPD Analog PC_Beep behavior ..... 34
Table 16. EAPD Behavior ..... 34
Table 17. GPIO Pin mapping ..... 35
Table 18. Electrical Specification: Maximum Ratings ..... 38
Table 19. Recommended Operating Conditions ..... 38
Table 20. 92HD68F Analog Performance Characteristics ..... 39
Table 21. HD Audio Bus Timing ..... 43
Table 22. SPDIF Timing ..... 43
Table 23. Digital Mic timing ..... 44
Table 24. GPIO Characteristics ..... 44
Table 25. Pin Configuration Default Settings ..... 49
Table 26. Command Format for Verb with 4-bit Identifier ..... 50
Table 27. Command Format for Verb with 12-bit Identifier ..... 50
Table 28. Solicited Response Format ..... 50
Table 29. Unsolicited Response Format ..... 50
Table 30. Widget List ..... 51
Table 31. 48QFP Pin Table ..... 361
Table 32. 40QFN Pin Table ..... 367
Table 33. Standard Reflow Profile ..... 369


©2014 TEMPO SEMICONDCUTOR, INC..

# 1. DESCRIPTION

## 1.1. Overview

The 92HD68F is a high fidelity, 10-channel audio codec compatible with the Intel High Definition (HD) Audio Interface. The 92HD68F provides full rate lossless audio playback from Blu-ray or other protected content with stereo 24-bit resolution and sample rates up to 192kHz. The 92HD68F codec provides high quality, HD Audio capability notebooks and desktops.

The 92HD68F is designed to meet or exceed premium logo requirements for Microsoft's Windows Logo Program (WLP) per Logo Point.

The 92HD68F provides stereo 24-bit, full duplex resolution supporting sample rates up to 192kHz by the DAC and ADC. 92HD68F SPDIF outputs support sample rates of 192kHz, 176.4kHz, 96kHz, 88.2kHz, 48kHz, and 44.1kHz.

The 92HD68F supports a wide range of notebook and desktop 10-channel configurations. The 2 independent SPDIF output interfaces provides connectivity to Consumer Electronic equipment like Dolby Digital decoders, powered speakers, mini disk drives or to a home entertainment system. Simultaneous HDMI and SPDIF output is possible.

MIC inputs can be programmed with 0/10/20/30dB boost. For more advanced configurations, the 92HD68F has up to 7 General Purpose I/O (GPIO).

The port presence detect capabilities allow the codecs to detect when audio devices are connected to the codec. The fully parametric IDT SoftEQ can be initiated upon headphone jack insertion and removal for protection of notebook speakers.

The 92HD68F operates with a 3.3V digital supply and a 5V analog supply. It can also work with 1.5V and 3.3V HDA signaling.

The 92HD68F is available in a 48-pin QFP or 40-pad QFN Environmental (ROHS) package.

## 1.2. Orderable Part Numbers

| | |
|---|---|
| 92HD68F1X5NDGXyyX | 5V Analog, 40QFN, 1.5V HDA Signaling |
| 92HD68F2X5NDGXyyX | 5V Analog, 40QFN, 3.3V HDA Signaling |
| 92HD68F3X5PRGXyyX | 5V Analog, 48QFP, switchable 1.5V or 3.3V HDA Signaling |

yy = silicon stepping/revision, contact sales for current data.
Add an "8" to the end for tape and reel delivery.


©2014 TEMPO SEMICONDCUTOR, INC..

## 1.3. Block Diagram

**Figure 1. 92HD68F Block Diagram**

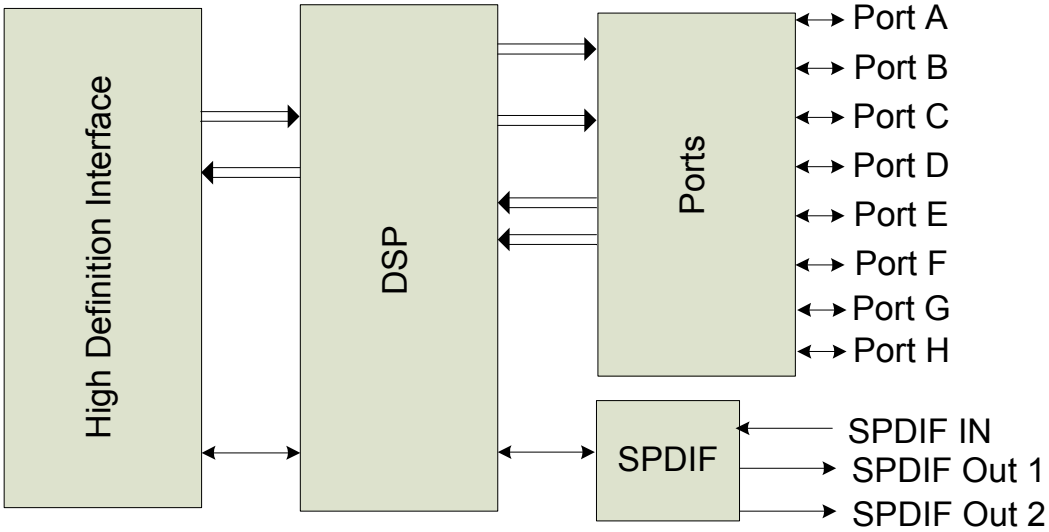


**Figure 2. System Diagram**

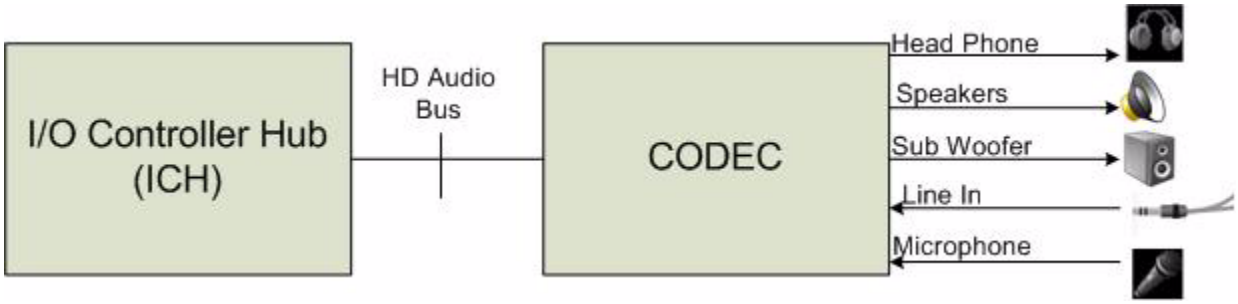



©2014 TEMPO SEMICONDCUTOR, INC..

# 2. DETAILED DESCRIPTION

## 2.1. Port Functionality

Multi-function (Input / output) ports allow for the highest possible flexibility. 8 bi-directional ports, 3 are headphone capable, support a wide variety of consumer desktop and mobile system use models.

| Pins | Port | Input | Output | Headphone | Mic Bias (Vref pin) | Input boost amp |
|---|---|---|---|---|---|---|
| 39/41 | A | Yes | Yes | Yes | Yes | Yes |
| 21/22 | B | Yes | Yes | Yes | Yes | Yes |
| 23/24 | C | Yes | Yes | | Yes | Yes |
| 35/36 | D | Yes | Yes | Yes | | Yes |
| 14/15 | E | Yes | Yes | | Yes | Yes |
| 16/17 | F | Yes | Yes | | | Yes |
| 43/44 | G | Yes | Yes | | | Yes |
| 45/46 | H | Yes | Yes | | | Yes |
| 48 | SPDIF_OUT0 | | Yes | | | |
| 40 | SPDIF_OUT1 | | Yes | | | |
| 47 | SPDIF_IN/OUT1 | Yes | Yes | | | |
| 4 (CLK=2) | DMIC0 | Yes | | | | Yes |
| 30 (CLK=2) | DMIC1 | Yes | | | | Yes |

**Table 1. 48QFP Port Characteristics**

| Pins | Port | Input | Output | Headphone | Mic Bias (Vref pin) | Input boost amp |
|---|---|---|---|---|---|---|
| 33/34 | A | Yes | Yes | Yes | Yes | Yes |
| 18/19 | B | Yes | Yes | Yes | Yes | Yes |
| 20/21 | C | Yes | Yes | | | Yes |
| 29/30 | D | Yes | Yes | Yes | | Yes |
| 11/12 | E | Yes | Yes | | Yes | Yes |
| 13/14 | F | Yes | Yes | | | Yes |
| 36/37 | G | Yes | Yes | | | Yes |
| 38/39 | H | Yes | Yes | | | Yes |
| 1 | SPDIF_OUT0 | | Yes | | | |
| 40 | SPDIF_OUT1 | | Yes | | | |

**Table 2. 40QFN Port Characteristics**


©2014 TEMPO SEMICONDCUTOR, INC..

### 2.1.1. Port Characteristics

Universal (Bi-directional) jacks are supported on ports A, B, C, D, E, F, G and H for all family members. Ports A, B, and D are designed to drive 32 ohm (nominal) headphones or a 10K (nominal) load. Line Level outputs are intended to drive an external 10K load (nominal) and an on board shunt resistor of 20-47K (nominal). However, applications may support load impedances of 2.8K ohms and above when implementing ports capable of operating as microphone inputs or line outputs. Input ports are 75K (nominal) at the pin.

DAC full scale outputs and intended full scale input levels are greater than 1V rms at 5V (+5%/-10%) to meet WLP requirements. Line output ports and Headphone output ports on the 92HD68F codec may be configured for +3dBV full scale output levels by using a vendor specific verb.

Output ports are always on to prevent pops/clicks associated with charging and discharging output coupling capacitors. This maintains proper bias on output coupling caps even in power state D3 as long as AVDD is available. Unused ports should be left unconnected. When updating existing designs, ensure that there are no conflicts between the output ports on the codec and existing circuitry.

| AFG Power State | Input Enable | Output Enable | Port Behavior |
|---|---|---|---|
| D0-D1 | 1 | 1 | Not allowed. Port is active as Input. |
| | 1 | 0 | Active - Port enabled as input |
| | 0 | 1 | Active - Port enabled as output |
| | 0 | 0 | Inactive -port is powered on (low output impedance) but drives silence only. |
| D2 | 1 | 1 | Not allowed. Port is active as Input. |
| | 1 | 0 | Inactive - Port enabled as input but powered down |
| | 0 | 1 | Active - Port enabled as output |
| | 0 | 0 | Inactive -port is powered on (low output impedance) but drives silence only. |
| D3 | 1 | 1 | Not allowed. Port is active as Input. |
| | 1 | 0 | Inactive (lower power) - Port keeps output coupling caps charged. |
| | 0 | 1 | Low power state. If enabled, Beep will output from the port |
| | 0 | 0 | Inactive (lower power) - Port keeps output coupling caps charged. |
| D3cold | - | - | Inactive (lower power) - Port keeps output coupling caps charged. |
| D4 | - | - | Inactive (lower power) - Port keeps output coupling caps charged. |
| D5 | - | - | Off - Charge on coupling caps will not be maintained. |

**Table 3. Analog Output Port Behavior**


©2014 TEMPO SEMICONDCUTOR, INC..

### 2.1.2. Vref_Out

Ports A, B, C (48-pin package only), & E support Vref_Out pins for biasing electret cartridge microphones. Settings of 80% AVDD, 50% AVDD, GND, and Hi-Z are supported. Attempting to program a pin widget control with a reserved or unsupported value will cause the associated Vref_Out pin to assume a Hi-Z state and the pin widget control Vref_En field will return a value of '000' (Hi-Z) when read.

### 2.1.3. Jack Detect

Plugs inserted to a jack are detected using SENSE inputs as described in the tables below. Per ECR15-B, the detection circuit operates when the CODEC is in D0 - D3 and can also operate if both the CODEC and Controller are in D3 (no bus clock.) Jack detection requires that all supplies (analog and digital) are active and stable. When AVDD is not present, the value reported in the pin widget is invalid.

When the HD Audio bus is in a low power state (reset asserted and clock stopped) the CODEC will generate a Power State Change Request when a change in port connectivity is sensed and then generate an unsolicited response after the HD Audio link has been brought out of a low power state and the device has been enumerated. Per ECR015-B, this will take less than 10mS.

The following table summarizes the proper resistor tolerances for different analog supply voltages.

| AVdd Nominal Voltage (+/- 5%) | Resistor Tolerance Pull-Up | Resistor Tolerance SENSE_A/B/C |
|---|---|---|
| 4.75 or 5VV | 1% | 1% |

| Resistor | SENSE_A | SENSE_B | SENSE_C |
|---|---|---|---|
| 39.2K | PORT A | PORT E | SPDIFOUT0 |
| 20.0K | PORT B | PORT F | SPDIFOUT1(pin40) |
| 10.0K | PORT C | PORT G | DMIC0 |
| 5.11K | PORT D | Port H | DMIC1 |
| 2.49K | Pull-up to AVDD | Pull-up to AVDD | Pull-up to AVDD |

**Table 4. 48pin Jack Detect**

| Resistor | SENSE_A | SENSE_B |
|---|---|---|
| 39.2K | PORT A | PORT E |
| 20.0K | PORT B | PORT F |
| 10.0K | PORT C | PORT G |
| 5.11K | PORT D | PORT H |
| 2.49K | Pull-up to AVDD | Pull-up to AVDD |

**Table 5. 40pin Jack Detect**

See reference design for more information on Jack Detect implementation.

### 2.1.4. SPDIF Output

Both SPDIF Outputs can operate at 44.1kHz, 48kHz, 88.2kHz, 96kHz and 192KHz as defined in the Intel High Definition Audio Specification with resolutions up to 24 bits. This insures compatibility with


©2014 TEMPO SEMICONDCUTOR, INC..

all consumer audio gear and allows for convenient integration into home theater systems and media center PCs.

The two SPDIF output converters can not be aligned in phase with the DACs. Even when attached to the same stream, the two SPDIF output converters may be misaligned with respect to their frame boundaries.

Per the HDA015-B ECR, the SPDIF outputs support the ability to provide clocking information even when no stream is selected for the converter, or when in a low power state. Also, as stated in the ECR, the SPDIF output ports support port presence detect.

SPDIF Outputs are outlined in tables below.

| AFG Power State | RESET# | Output Enable | Keep Alive Enable | Converter Dig Enable | Stream ID | Pin Behavior |
|---|---|---|---|---|---|---|
| D0-D3 | Asserted (Low) | - | - | - | - | Hi-Z[1] immediately after power on, otherwise the previous state is retained. |
| D0 | De-Asserted (High) | Disabled | - | - | - | Hi-Z |
| | | Enabled | Disabled | Disabled | - | Active - Pin drives 0 |
| | | | | Enabled | 0 | Active - Pin drives SPDIF-format, but data is zeroes |
| | | | | | 1-15 | Active - Pin drives SPDIFOut0 data |
| | | | Enabled | Disabled | - | Active - Pin drives SPDIF-format, but data is zeroes |
| | | | | Enabled | 0 | Active - Pin drives SPDIF-format, but data is zeroes |
| | | | | | 1-15 | Active - Pin drives SPDIFOut0 data |
| D1-D2 | | Disabled | - | - | - | Hi-Z |
| | | Enabled | Disabled | Disabled | - | Active - Pin drives 0 |
| | | | | Enabled | - | Active - Pin drives 0 |
| | | | Enabled | Disabled | - | Active - Pin drives SPDIF-format, but data is zeroes |
| | | | | Enabled | - | Active - Pin drives SPDIF-format, but data is zeroes |
| D3 | | Disabled | - | - | - | Hi-Z |
| | | Enabled | Disabled | Disabled | - | Hi-Z |
| | | | | Enabled | - | Hi-Z |
| | | | Enabled | Disabled | - | Active - Pin drives SPDIF-format, but data is zeroes |
| | | | | Enabled | - | Active - Pin drives SPDIF-format, but data is zeroes |
| D3cold | - | - | - | - | - | Hi-Z |
| D4 | - | - | - | - | - | Hi-Z |
| D5 | - | - | - | - | - | Hi-Z |

**Table 6. SPDIF OUT 0 Behavior**

1.Internal Pull-Down always enabled


©2014 TEMPO SEMICONDCUTOR, INC..

| AFG Power State | RESET# | GPIO0 Enable | Input Enable | Output Enable | Keep Alive En | Converter Dig En | Strm ID | Pin Mode | Pin Behavior |
|---|---|---|---|---|---|---|---|---|---|
| D0-D4 | Asserted (Low) | - | - | - | - | - | - | | EAPD (internal pull-up enabled) immediately after power on, otherwise the previous state is retained. |
| D0-D4 | De-Asserted (High) | 0 | 0 | 0 | - | - | - | EAPD | Pin functions as EAPD |
| D0-D4 | De-Asserted (High) | 1 | - | - | - | - | - | GPIO | Active - Pin reflects GPIO0 configuration (internal pull-down enabled) |
| D0-D4 | De-Asserted (High) | 0 | 1 | 0 | - | - | - | SPDIF IN | Pin functions as SPDIF input (internal bias enabled) |
| D0 | De-Asserted (High) | 0 | 0 | 1 | 0 | 0 | - | SPDIF OUT | Active - Pin drives 0 |
| | | | | | | 1 | 0 | | Active - Pin drives SPDIF-format, but data is zeroes |
| | | | | | | | 1-15 | | Active - Pin drives SPDIFOut1 data |
| | | | | | 1 | 0 | - | | Active - Pin drives SPDIF-format, but data is zeroes |
| | | | | | | 1 | 0 | | Active - Pin drives SPDIF-format, but data is zeroes |
| | | | | | | | 1-15 | | Active - Pin drives SPDIFOut1 data |
| D1-D2 | De-Asserted (High) | 0 | 0 | 1 | 0 | 0 | - | | Active - Pin drives 0 |
| | | | | | 0 | 1 | - | | Active - Pin drives 0 |
| | | | | | 1 | 0 | - | | Active - Pin drives SPDIF-format, but data is zeroes |
| | | | | | 1 | 1 | - | | Active - Pin drives SPDIF-format, but data is zeroes |
| D3 | De-Asserted (High) | 0 | 0 | 1 | 0 | 0 | - | | Hi-Z |
| | | | | | 0 | 1 | - | | Hi-Z |
| | | | | | 1 | 0 | - | | Active - Pin drives SPDIF-format, but data is zeroes |
| | | | | | 1 | 1 | - | | Active - Pin drives SPDIF-format, but data is zeroes |
| D3cold | De-Asserted (High) | 0 | 0 | 1 | - | - | - | | Hi-Z |
| D4 | De-Asserted (High) | 0 | 0 | 1 | - | - | - | | Hi-Z |
| D5 | - | - | - | - | - | - | - | | Hi-Z |

**Table 7. SPDIF OUT 1 Behavior**

## 2.2. SPDIF Input

SPDIF IN can operate at 44.1 KHz, 48 KHz, or 96 KHz, and implements internal Jack Sensing (Port presence Detect).

A sophisticated digital PLL allows automatic rate detection and accurate data recovery. The ability to directly accept consumer SPDIF voltage levels eliminates the need for costly external receiver ICs.

Status flags from the input stream are updated only after the entire valid block has been received (or at least when all bits of a particular status flag have been received) to ensure that software does not read an invalid mixture of old and new data.


©2014 TEMPO SEMICONDCUTOR, INC..

In general, the SPDIF input block does not alter the data received. However, it is sometimes necessary to alter the data when the converter widget settings do not match the stream format. The following table outlines a few cases and the expected behavior.

Port presence detect for SPDIF_IN operates differently from other ports. Once the PLL has locked and valid framing (no errors) has been detected, then the port presence detect bit is set. In D3, and D3 without a clock, it is not possible to check for proper framing. Monitoring of activity (rising and falling edges) is sufficient to verify a change in connectivity in D3. If no clock is present, then the internal oscillator is used until a clock is restored. When the HD Audio bus is in a low power state (reset asserted and clock stopped) the CODEC will generate a Power State Change Request when a change in SPDIF_IN port connectivity is sensed and then generate an unsolicited response after the HD Audio link has been brought out of a low power state and the device has been enumerated. Per ECR015-B, this will take less than 10mS.

| Conflict | Behavior | Resolution |
|---|---|---|
| Converter widget rate does not equal the stream rate | Although the SPDIF input block is designed to handle inputs slightly above or below the programmed rate, samples may be lost if the input rate is much higher than the rate programmed into the converter widget. | Program the converter widget with the same rate as indicated by the input stream. |
| Converter widget programmed for a word length less than the word length provided by the input stream | If the input stream indicates non PCM data, the data will be truncated to the requested word length. If LPCM data is indicated in the input stream, the CODEC will round the received data to the requested length.[1] | Program the converter widget with the word length indicated in the input stream. |
| Converter widget programmed with a word length greater than the word length provided by the input stream. | Regardless of content, 24 bits per channel of data will be transferred from the SPDIF input stream to the HD Audio bus interface. Truncation or rounding to the requested word length will be handled as described as above. Any non-zero data in the incoming stream will cause problems. | Program the converter widget with the word length indicated in the input stream. Although not recommended, application or driver software may program the converter widget with a word length of 24 bits, truncate the input to the word length indicated by the input stream, then right extend the data using 0s to the desired word length. |

**Table 8. SPDIF Behavior**

1.Rounding may be disabled by setting the disable bit (AFG vendor specific verb -see widget list) or setting the SPDIF_IN converter widget Frmt StrmType field to 1 (non-PCM)

## 2.3. Analog Mixer

The mixer supports independent gain (-34.5 to +12dB in 1.5dB steps) on each input as well as independent mutes on each input. The following inputs are available: The output of the mixer may be sent to the ADC where the ADC record gain can adjust the volume. If the output of the mixer is sent to an analog port, then a separate volume control is provided to adjust the output volume. This mixer output volume control supports a gain range of -46.5dB to 0dB in 1.5dB steps. (Selecting -46.5dB will automatically mute the output.)

- inMux0
- inMux1
- inMux2
- inMux3
- CD In


©2014 TEMPO SEMICONDCUTOR, INC..

## 2.4. Input Multiplexers

The codec implements 4 port input multiplexers. These multiplexers allow a preselection of one of four possible inputs:

| Inport0_Mux | Inport1_Mux | Inport2_Mux | Inport3_mux |
|---|---|---|---|
| Port A | Port A | Port B | DAC 0 |
| Port B | Port E | Port C | DAC 1 |
| Port D | Port G | Port G | DAC 2 |
| Port F | Port H | Port H | DAC 3 |

**Table 9. Input Multiplexers**

## 2.5. ADC Multiplexers

The codec implements 2 ADC input multiplexers. These multiplexers incorporate the ADC record gain function (0 to +22.5dB gain in 1.5dB steps) as an output amp and allow a preselection of one of these possible inputs:

- Port A
- Port B
- Port C
- Port D
- Port E
- Port F
- Port G
- Port H
- CD In
- Mixer Output
- DMIC 0 (only available in 48 pin package)
- DMIC1 (only available in 48 pin package)

## 2.6. Power Management

The HD Audio specification defines power states, power state widgets, and power state verbs. Power management is implemented at several levels. The Audio Function Group (AFG) , all converter widgets, and all pin complexes support the power state verb F05/705. Converter widgets are active in D0 and inactive in D1-D3.

The following table describes what functionality is active in each power state.

| Function | D0 | D1[1] | D2 | D3 | D3cold | Vendor Specific D4[2] | Vendor SpecificD5[2] |
|---|---|---|---|---|---|---|---|
| SPDIF Outputs | On | On | On (idle) | On (idle)[6] | Off | Off | Off |
| SPDIF Input | On | Off | Off | Off | Off | Off | Off |
| Digital Microphone inputs | On | Off | Off | Off | Off | Off | Off |
| DAC | On | Off | Off | Off | Off | Off | Off |
| D2S | On | Off | Off | Off | Off | Off | Off |
| ADC | On | Off | Off | Off | Off | Off | Off |


©2014 TEMPO SEMICONDCUTOR, INC..

| Function | D0 | D1[1] | D2 | D3 | D3cold | Vendor Specific D4[2] | Vendor SpecificD5[2] |
|---|---|---|---|---|---|---|---|
| ADC Volume Control | On | Off | Off | Off | Off | Off | Off |
| Ref ADC | On | Off | Off | Off | Off | Off | Off |
| Analog Clocks | On | Off | Off | Off | Off | Off | Off |
| GPIO pins | On | On | On | On[6] | On | On | Off |
| VrefOut Pins | On | On | Off | Off | Off | Off | Off |
| Input Boost | On | On | Off | Off | Off | Off | Off |
| Analog mixer | On | On | Off | Off | Off | Off | Off |
| Mixer Volumes | On | On | Off | Off | Off | Off | Off |
| Analog PC_Beep | On | On | On | On | Off | Off | Off |
| Digital PC_Beep | On | On | On | On[6] | Off | Off | Off |
| Lo/HP Amps | On | On | On | Low Drive[3] | Low Drive[3] | Low Drive[3] | Off |
| VAG amp | On | On | On | Low Drive[4] | Low Drive | Low Drive | Off |
| Port Sense | On | On | On | On[5] | Off | Off | Off |
| Reference Bias generator | On | On | On | On | On | On | Off |
| Reference Bandgap core | On | On | On | On | On | On | Off |
| HD Audio-Link | On | On | On | On[6] | Limited[7] | Off | Off |
| PLL | On | On | On | Off[8] | Off[9] | Off | Off |

1.No DAC or ADC streams are active. Analog mixing and loop thru are supported.
2.D4 and D5 power states are entered only when D3cold is requested. D4 and D5 may be viewed as D3cold behavioral options.
3.VAG is kept active when ports are disabled or in D3/D3cold/D4. PC_Beep is supported in D3 but may be attenuated and distorted depending on load impedance.
4.VAG is always ramped up and down gradually, except in the case of a sudden power removal. VAG is active in D2/D3 but in a low power state.
5. Both AVDD and DVDD must be available for Port Sense to operate.
6.Not active if BITCLK is not running (Controller in D3), but can signal power state change request (PME)
7.Only double function group reset verbs and link reset supported per ECR15b
8.PLL remains on if SPDIF_Out Keep Alive is enabled. PLL disabled only after DAC fading is complete and SDM has settled.
9.PLL disabled only after DAC fading is complete and SDM has settled.

The D3-default state is available for HD Audio compliance. The programmable values, exposed via vendor-specific settings, are under TSI Device Driver control for further power reduction. The analog mixer, line and headphone amps, port presence detect, and internal references may be disabled using vendor specific verbs. Use of these vendor specific verbs will cause pops.

The default power state for the Audio Function Group after reset is D3.

## 2.7. AFG D0

The AFG D0 state is the active state for the device. All functions are active if their power state (if they support power management at their node level) has been set to D0.

## 2.8. AFG D1

D1 is a lower power mode where all converter widgets are disabled. Analog mixer and port functions are active. The part will resume from theD1 to theD0 state within 1 mS.


©2014 TEMPO SEMICONDCUTOR, INC..

## 2.9. AFG D2

The D2 state further reduces power by disabling the mixer and port functions. The port amplifiers and internal references remain active to keep port coupling caps charged and the system ready for a quick resume to either the D1 or D0 state. The part will resume from the D2 state to the D0 state within 2mS.

## 2.10. AFG D3

The D3-default state is available for HD Audio compliance. All converters are shut down. Port amplifiers and references are active but in a low power state to prevent pops. Resume times may be longer than those from D2, but still less than 10mS to meet Intel low power goals. The default power state for the Audio Function Group after power is applied is D3.

The traditional use for D3 was as a transitional state before power was removed (D3 cold) before the system entered into standby, hibernate, or shut-down. To conserve power, Intel now promotes using D3 whenever there are no active streams or other activity that requires the part to consume full power. The system remains in S0 during this time. When a stream request or user activity requires the CODEC to become active, the driver will immediately transition the CODEC from D3 to D0. To enable this use model, the CODEC must resume within 10mS and not pop. Intel HDA ECR-15b / Low Power White paper power goals are < 30mW when analog PC_Beep is not enabled, and < 60mW when analog PC_Beep is enabled.

While in AFG D3, the HD Audio controller may be in a D0 state (HD Audio bus active) or in a D3 state (HD Audio bus held in reset with no Bit_Clk, SData_Out, or Sync activity.) The expected behavior is as follows (see the ECR15b section for more information):

| Function | HDA Bus active | HDA Bus stopped |
|---|---|---|
| Port Presence Detect state change | Unsolicited Response | Wake Event followed by an unsolicited response |
| GPIO state change | Unsolicited Response | Wake Event followed by an unsolicited response |

### *2.10.1. AFG D3cold*

The D3cold power state is the lowest power state available that does not use vendor specific verbs. While in D3cold, the CODEC will still respond to bus requests to revert to a higher power state (double AFG reset, link reset). However, audio processing, port presence detect, and other functions are disabled. Per the HD Audio bus ECR 015b, the D3cold state is intended to be used just prior to removing power to the CODEC. Typically, power will be removed within 200mS. However, the codec may exit from the D3cold state by generating 2, back-to-back, AFG reset events. Resume time from D3cold is less than 200mS.

## 2.11. Vendor Specific Function Group Power States D4/D5

The codec introduces vendor specific power states. A vendor defined verb is added to the Audio Function Group that combines multiple vendor specific power control bits into logical power states for use by the audio driver. The 2 states defined offer lower power than the 5 existing states defined in the HD Audio specification and ECR15b. The Vendor Specific D4 state provides lower digital power consumption relative to D3cold by disabling HD Audio link responses. Vendor specific D5 further reduces power consumption on the digital supply by turning off GPIO drivers, and reduces analog power consumption by turning off all analog circuitry except for reset circuits.


©2014 TEMPO SEMICONDCUTOR, INC..

States D4/D5 are not entered until D3cold has been requested so are actually D3cold options rather than true, independent, power states. Software can pre-program the D4 or D5 state as a re-definition of how the part will behave when the D3cold power state is requested or software may enter D3cold, then set the D4 or D5 before performing the power state get command. The preferred method is to request D3cold, then select D4 or D5 as desired.This will reduce the severity of pops encountered when entering D4 or D5.

Both power states require a link reset or removal of DVDD to exit.

The CODEC may pop when using these verbs and transition times to an active state (D1 or D0 for example) may take several seconds.

## 2.12. Low-voltage HDA Signaling

The codec is compatible with either 1.5V or 3.3V HDA bus signaling; in the 48QFP package the voltage selection is done dynamically based on the input voltage of DVDD_IO. For the 40-QFN package, seperate orderable part numbers to use 1.5V or 3.3V HDA bus signaling.

DVDD_IO is currently not a logic configuration pin, but rather provides the digital power supply to be used for the HDA bus signals.

When in 1.5V mode, the codec can correctly decode BITCLK, SYNC, RESET# and SDO as they operate at 1.5V; additionally it will drive SDI and SDO at 1.5V. None of the GPIOs are affected, as they always function at their nominal voltage (DVDD or AVDD).

## 2.13. Multi-channel capture

The capability to assign multiple “ADC Converters” to the same stream is supported to meet the microphone array requirements of Vista and future operating systems. Single converter streams are still supported this is done by assigning unique non zero Stream IDs to each converter. All capture devices (ADCs 0 and 1) may be used to create a multi-channel input stream. There are no restrictions regarding digital microphones.

The ADC Converters can be associated with a single stream as long the sample rate and the bits per sample are the same. The assignment of converter to channel is done using the “CnvtrID” widget and is restricted to even values. The ADC converters will always put out a stereo sample and therefore require 2 channels per converter.

The stream will not be generated unless all entries for the targeted converters are set identically, and the total number of assigned converter channels matches the value in the NmbrChan field. These are listed the “Multi-Converter Stream Critical Entries.” table.

An example of a 4 Channel Steam with ADC0 supplying channels 0&1 and ADC1 supplying channels 2 & 3 is shown below. A 4 Channel stream can be created by assigning the same non-zero stream id “Strm= N” to both ADC0 and ADC1. The sample rates must be set the same and the number of channels must be set to 4 channels “NmbrChan = 0011”.

| | | |
|---|---|---|
| **ADC1 CnvtrID** | **(NID = 0x08)** | |
| | [3:0] | Ch = 2 |
| **ADC0 CnvtrID** | **(NID = 0x07)** | |
| | [3:0] | Ch=0 |

**Table 10. Example channel mapping**


©2014 TEMPO SEMICONDCUTOR, INC..

**Figure 3. Multi-channel capture**

The following figure describes the bus waveform for a 24-bit, 48KHz capture stream with ID set to 1.

**Figure 4. Multi-channel timing diagram**

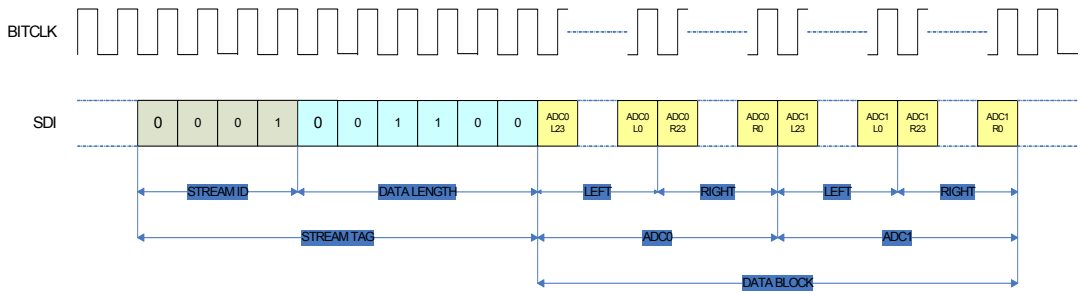


| ADC[1:0] Cnvtr | Bit Number | Sub Field Name | Description |
|---|---|---|---|
| | [15] | StrmType | Stream Type (TYPE):<br>0: PCM<br>1: Non-PCM (not supported) |
| | [14] | FrmtSmplRate | Sample Base Rate<br>0= 48kHz<br>1=44.1KHz |
| | [13:11] | SmplRateMultp | Sample Base Rate Multiple<br>000=48kHz/44.1kHz or less<br>001= x2<br>010= x3 (not supported)<br>011= x4 192kHz only, 176.4 not supported<br>100-111= Reserved |
| | [10:8] | SmplRateDiv | Sample Base Rate Divisor<br>000= Divide by 1<br>001= Divide by 2 (not supported)<br>010= Divide by 3 (not supported)<br>011= Divide by 4 (not supported)<br>100= Divide by 5 (not supported)<br>101= Divide by 6 (not supported)<br>110= Divide by 7 (not supported)<br>111= Divide by 8 (not supported) |

**Table 11: Mult-channel**


©2014 TEMPO SEMICONDCUTOR, INC..

| | | | |
|---|---|---|---|
| | [6:4] | BitsPerSmpl | Bits per Sample<br>000= 8 bits (not supported)<br>001= 16 bits<br>010= 20 bits<br>011= 24 bits<br>100-111= Reserved |
| | [3:0] | NmbrChan | Number of Channels<br>Number of channels for this stream in each “sample block” of the “packets” in each “frame” on the link.<br>0000=1 channel (not supported)<br>0001 = 2 channels<br>…<br>1111= 16 channels. |
| | [7:4] | Strm | Software-programmable integer representing link stream ID used by the converter widget. By convention stream 0 is reserved as unused. |
| | [3:0] | Ch | Integer representing lowest channel used by converter.<br>0 and 2 are valid Entries<br>If assigned to the same stream, one ADC must be assigned a value of 0 and the other ADC assigned a value of 2. |

**Table 11: Mult-channel**

## 2.14. Digital Microphone Support

The digital microphone interface permits connection of a digital microphone(s) to the CODEC via the DMIC0 and DMIC_CLK 2-pin interface. The DMIC0 signal is an input that carries individual channels of digital microphone data to the ADC. In the event that a single microphone is used, the data is ported to both ADC channels. This mode is selected using a vendor specific verb and the left time slot is copied to the ADC left and right inputs.

The DMIC_CLK output is controllable from 4.704Mhz, 3.528Mhz, 2.352Mhz, 1.176Mhz and is synchronous to the internal master clock. The default frequency is 2.352Mhz.

The DMIC data input is reported as a stereo input pin widget that incorporates a boost amplifier. The pin widget is shown connected to the ADCs through the same multiplexors as the analog ports. Although the internal implementation is different between the analog ports and the digital microphones, the functionality is the same. In most cases, the default values for the DMIC clock rate and data sample phase will be appropriate and an audio driver will be able to configure and use the digital microphones exactly like an analog microphone.

To conserve power, the analog portion of the ADC will be turned off if the D-mic input is selected. When switching from the digital microphone to an analog input to the ADC, the analog portion of the ADC will be brought back to a full power state and allowed to stabilize before switching from the digital microphone to the analog input. This should take less than 10mS.

DMIC pin widgets support port presence detect directly using SENSE-C input on 4/5 DAC parts in a 48-pin package.


©2014 TEMPO SEMICONDCUTOR, INC..

The codec supports the following digital microphone configurations:

| Digital Mics | Data Sample | ADC Conn. | Notes |
|---|---|---|---|
| 0 | N/A | N/A | No Digital Microphones |
| 1 | Single Edge | 0, or 1 | Available on either DMIC_0 or DMIC_1<br>When using a microphone that supports multiplexed operation (2-mics can share a common data line), configure the microphone for “Left” and select mono operation using the vendor specific verb.<br>“Left” D-mic data is used for ADC left and right channels. |
| 2 | Double Edge on either DMIC_0 or 1 | 0, or 1 | Available on either DMIC_0 or DMIC_1, External logic required to support sampling on a single Digital Mic pin channel on rising edge and second Digital Mic right channel on falling edge of DMIC_CLK for those digital microphones that don’t support alternative clock edge (multiplexed output) capability. |
| 3 | Double Edge on one DMIC pin and Single Edge on the second DMIC pin. | 0, or 1 | Requires both DMIC_0 and DMIC_1, External logic required to support sampling on a single Digital Mic pin channel on rising edge and second Digital Mic right channel on falling edge of DMIC_CLK for those digital microphones that don’t support alternative clock edge (multiplexed output) capability. Two ADC units are required to support this configuration |
| 4 | Double Edge | 0, or 1 | Connected to DMIC_0 and DMIC_1, External logic required to support sampling on a single Digital Mic pin channel on rising edge and second Digital Mic right channel on falling edge of DMIC_CLK for those digital microphones that don’t support alternative clock edge capability. Two ADC units are required to support this configuration |

**Table 12. Valid Digital Mic Configurations**

| Power State | DMIC Widget Enabled? | DMIC_CLK Output | DMIC_0,1 | Notes |
|---|---|---|---|---|
| D0 | Yes | Clock Capable | Input Capable | DMIC_CLK Output is Enabled when either DMIC_0 or DMIC_1 Input Widget is Enabled. Otherwise, the DMIC_CLK remains Low |
| D1-D3 | Yes | Clock Disabled | Input Disabled | DMIC_CLK is HIGH-Z with Weak Pull-down |
| D0-D3 | No | Clock Disabled | Input Disabled | DMIC_CLK is HIGH-Z with Weak Pull-down |
| D4 | - | Clock Disabled | Input Disabled | DMIC_CLK is HIGH-Z with Weak Pull-down |
| D5 | - | Clock Disabled | Input Disabled | DMIC_CLK is HIGH-Z with Weak Pull-down |

**Table 13. DMIC_CLK and DMIC_0,1 Operation During Power State**


©2014 TEMPO SEMICONDCUTOR, INC..

**Figure 5. Single Digital Microphone (data is ported to both left and right channels**

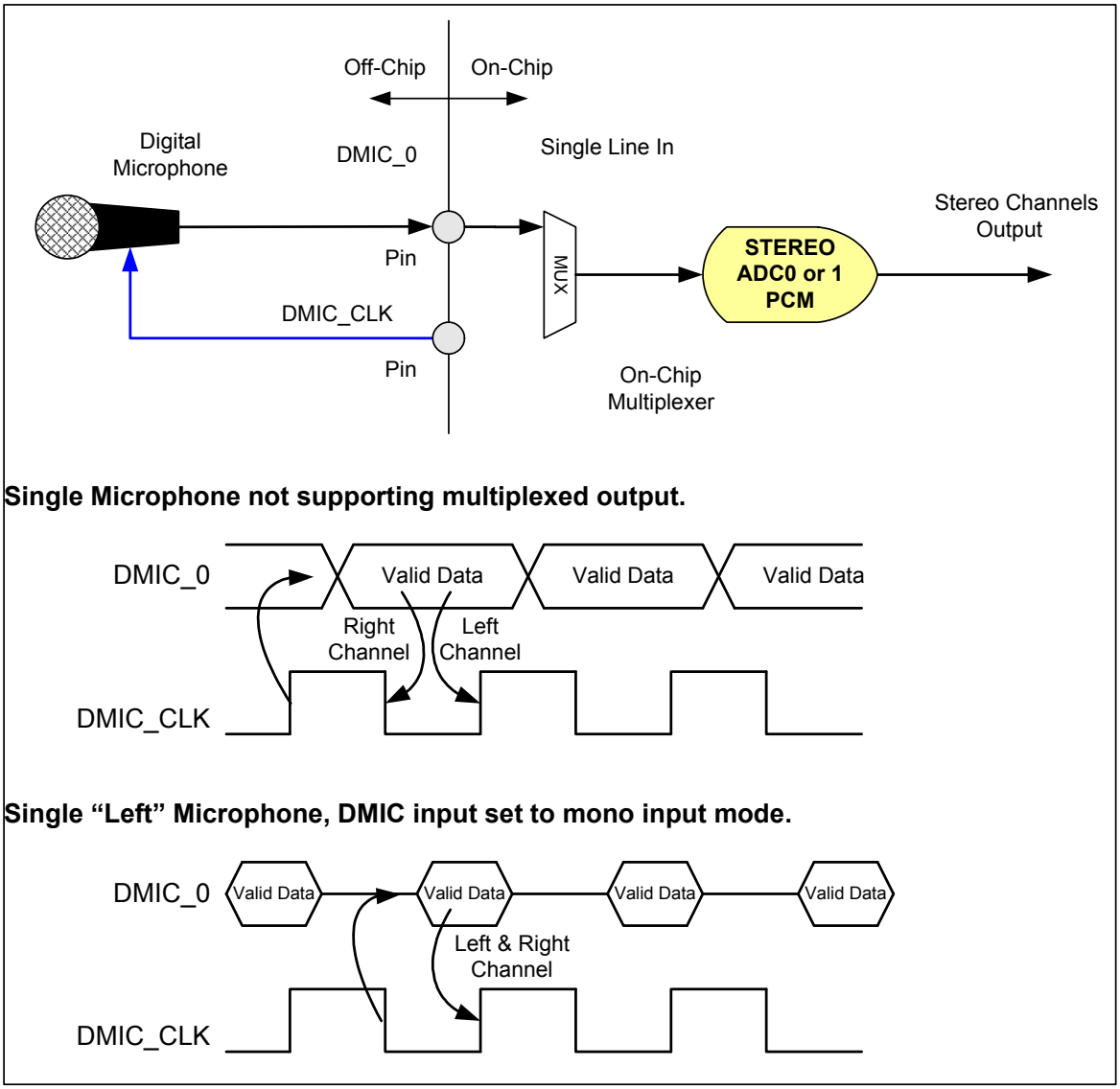



©2014 TEMPO SEMICONDCUTOR, INC..

**Figure 6. Stereo Digital Microphone Configuration**

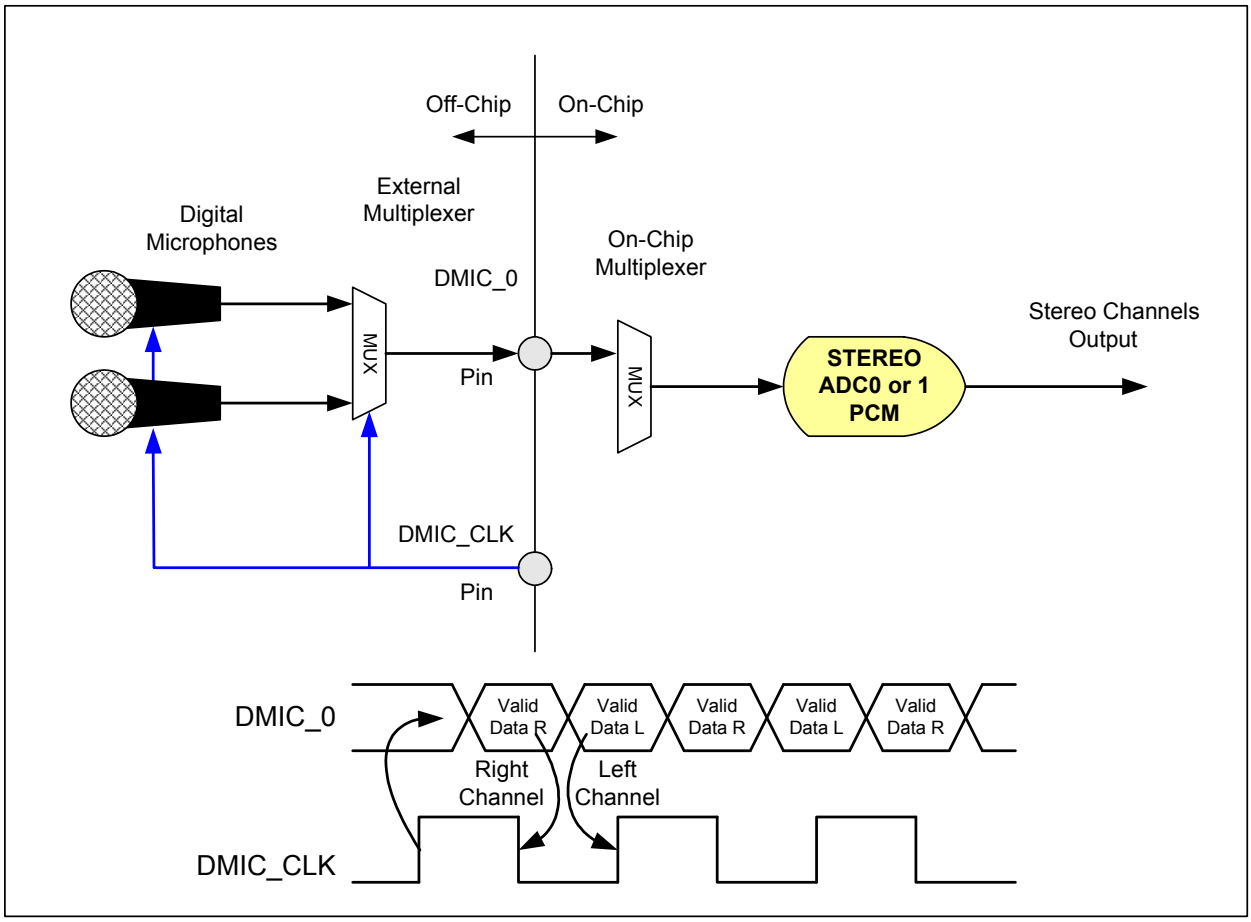


*Note: Some Digital Microphone Implementations support data on either edge, therefore, the external mux may not be required.*


©2014 TEMPO SEMICONDCUTOR, INC..

**Figure 7. Quad Digital Microphone Configuration**

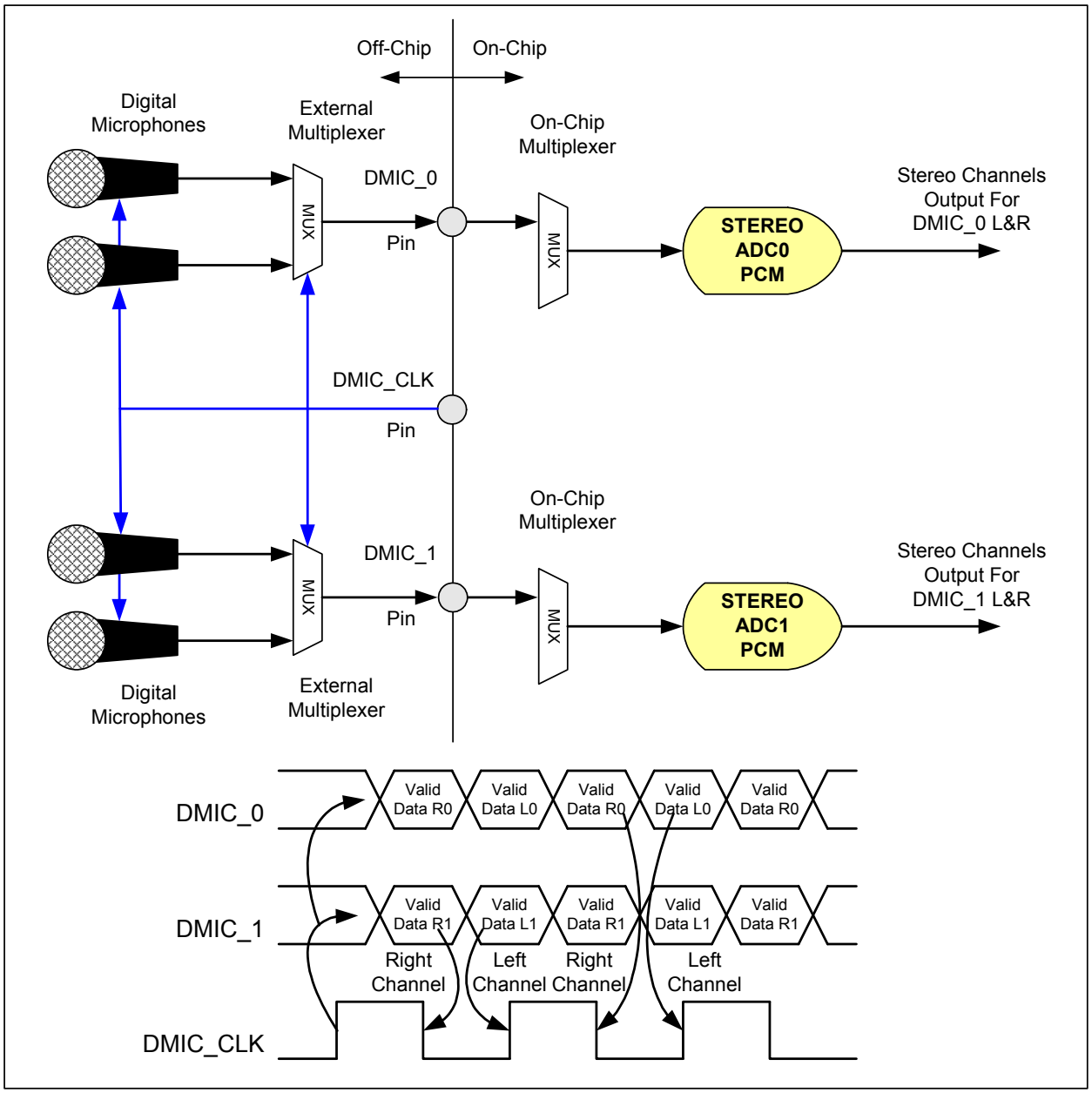


*Note: Some Digital Microphone Implementations support data on either edge, in this case the external multiplexer is not required.*


©2014 TEMPO SEMICONDCUTOR, INC..

## 2.15. Analog PC-Beep

The codec supports automatic routing of the PC_Beep pin to several outputs when the HD-Link is in reset. Codec will route PC_Beep to ports A, B, D, and F by default when reset is applied. To prevent pops, beep is not enabled immediately when power is applied. Codec will mute outputs and wait until reference and ampliers have stabalized before enabling beep pass thru after power on reset. To prevent pops when removing power, automatic routing of PC_Beep is not supported in D3cold, D4, or D5.

Analog PC-Beep may also be supported during HD-Link Reset if analog PC_Beep is manually enabled before entering reset. Analog PC_Beep is mixed at the port and only ports enabled as outputs will pass PC_Beep.

PC-Beep may be attenuated and distorted when the CODEC is in D3 depending on the load impedance seen by the output amplifier since all ports are in a low power state while in D3. Load impedances of 10K or larger can support full scale outputs but lower impedance loads will distort unless the output amplitude is reduced.

Analog PC_Beep is not supported in D3 Cold, or the vendor specific states D4/D5.

Analog PC_Beep is typically used during POST to route error beep codes to internal speakers for diagnostic purposes. When using a legacy OS such as DOS, analog PC_Beep routes “Bell” and “Alarm” tones from the south bridge to internal speakers or headphones. Keyboard controller “Keyclick” sounds are also routed to internal speakers using the analog beep function in both Windows and legacy operating systems


©2014 TEMPO SEMICONDCUTOR, INC..

## Analog PC_Beep Behavior - Boot

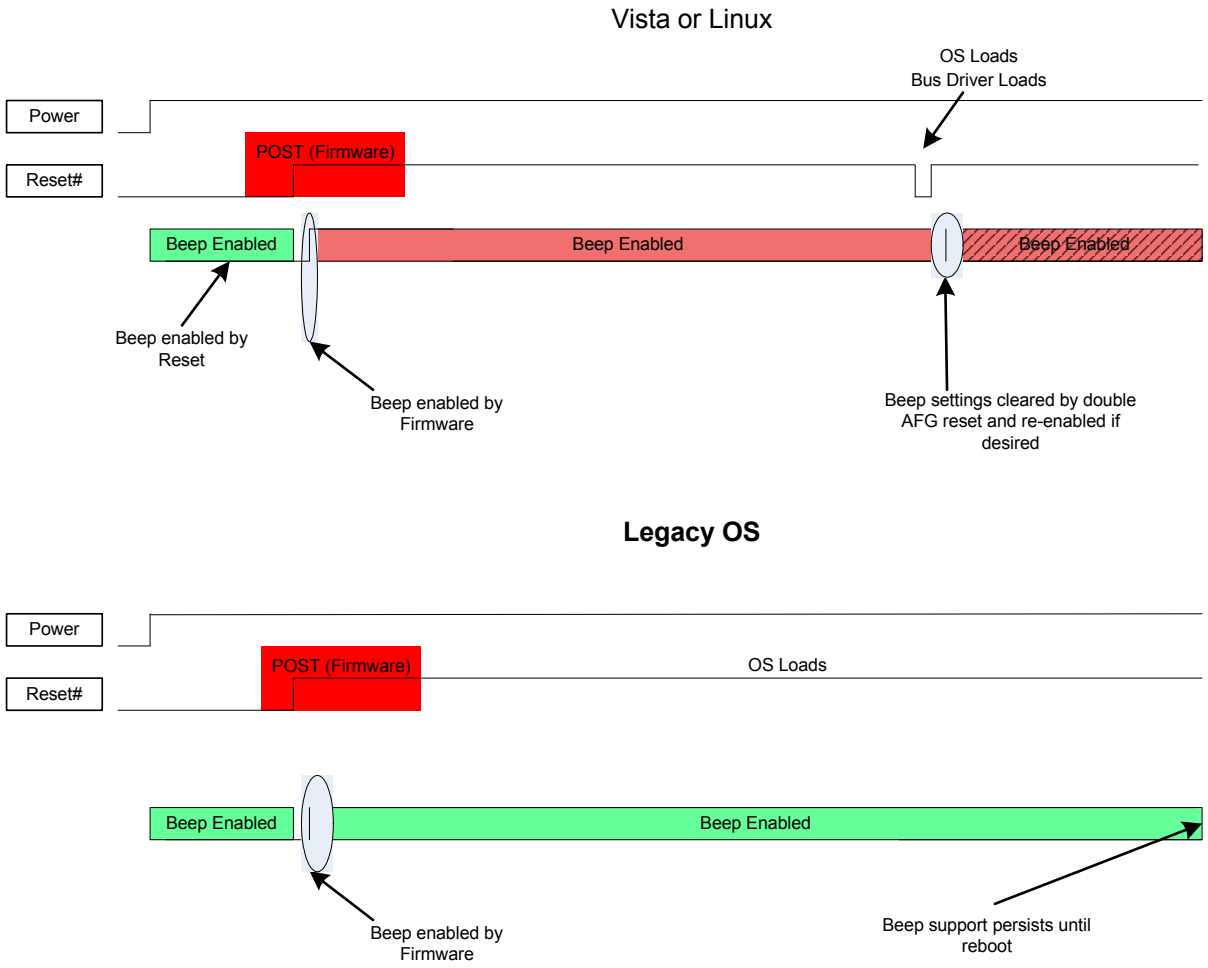



©2014 TEMPO SEMICONDCUTOR, INC..

**Analog PC_Beep Behavior – D3 clockless**

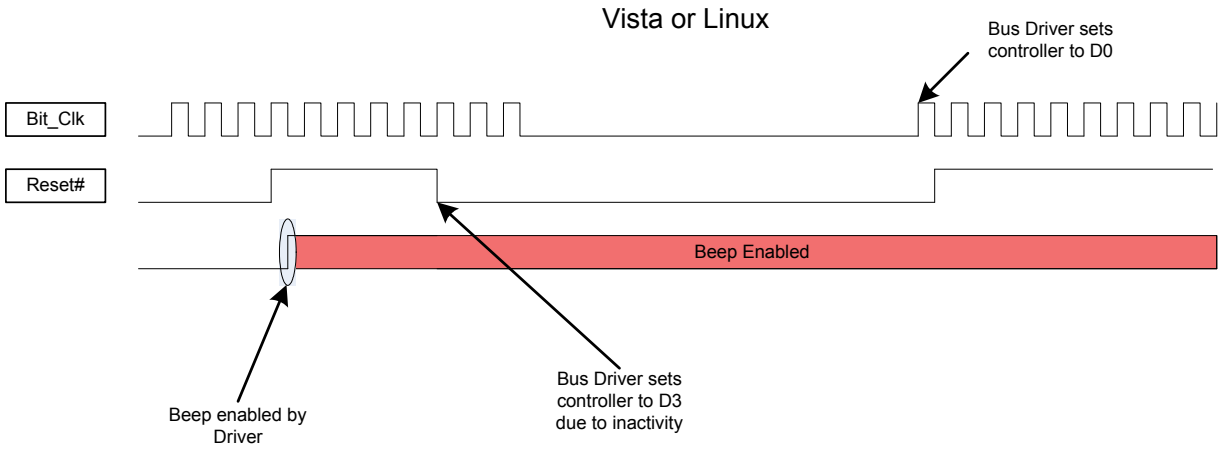


## 2.16. Digital PC-Beep

This block uses an 8-bit divider value to generate the PC beep from the 48kHz HD Audio Sync pulse. The digital PC_Beep block generates the beep tone on all Pin Complexes that are currently configured as outputs. The HD Audio spec states that the beep tone frequency = (48kHz HD Audio SYNC rate) / (4*Divider), producing tones from 47 Hz to 12 kHz (logarithmic scale). Other audio sources are disabled when digital PC_Beep is active.

It should be noted that digital PC Beep is disabled if the divider = 00h.

PC-Beep may be attenuated and distorted when the CODEC is in D3 depending on the load impedance seen by the output amplifier since all ports are in a low power state while in D3. Load impedances of 10K or larger can support full scale outputs but lower impedance loads will distort unless the output amplitude is reduced. Digital PC_Beep requires a clock to operate and the CODEC will prevent the system from stopping the bus clock while in D3 by setting the Clock_Stop_OK bit to 0 to indicate that the part requires a clock.

## 2.17. Headphone Drivers

The codec implements headphone capable outputs on some ports. The Microsoft Windows Logo Program allows up to the equivalent of 100ohms in series. However, an output level of +3dBV at the pin is required to support 300mV at the jack with a 32ohm load and 1V with a 320 ohm load. Microsoft allows device and system manufactures to limit output voltages to address EU safety requirements. (WLP 3.09 - please refer to the latest Windows Logo Program requirements from Microsoft.) Power limiting may be implemented through the use of an external series resistance.

Although 3 Headphone amplifiers are present, only two may be used simultaneously. Headphone performance will degrade if more than one port is driving a 32 ohm load.


©2014 TEMPO SEMICONDCUTOR, INC..

## 2.18. EAPD

The EAPD pin (pin 47) also supports SPDIF_OUT, SPDIF_IN, and GPIO functions. The pin defaults to EAPD after power on reset and will remain in EAPD mode until either GPIO is enabled for pin 47 or the port I/O is enabled as an input to support SPDIF_IN or an output to support SPDIF_OUT. Although named External Amplifier Power Down (EAPD) by the HD Audio specification, this pin operates as an external amplifier power up signal. The EAPD value is reflected on the EAPD pin; a 1 causes the external amplifier to power up (equivalent to D0), and a 0 causes it to power down (equivalent to D3.) When the EAPD value = 1, the EAPD pin must be placed in a state appropriate to the current power state of the associated Pin Widget even though the EAPD value (in the register) may remain 1. The pin defaults to an open-drain configuration (an external pull-up is recommended.)

Per the HD Audio specification and ECR15b, multiple ports may control EAPD. The EAPD pin assumes the highest power state of all the the EAPD bits in all of the pin complexes. The default value of EAPD is 1 (powered on), but the FG power state will override and the pin will be low.

Vendor specific verbs are available to configure this pin. These verbs retain their values across link and single function group resets but are set to their default values by power on reset:

| MODE1 | MODE0 | EAPD Pin Function | Description |
|---|---|---|---|
| 0 | 0 | Open Drain I/O | Value at pin is wired-AND of EAPD bit and external signal. (default) |
| 0 | 1 | CMOS Output | Value of EAPD bit in pin widget is forced at pin |
| 1 | 0 | CMOS Input | External signal controls internal amps. EAPD bit in pin widget ignored |
| 1 | 1 | CMOS Input | External signal controls internal amps. EAPD bit in pin widget ignored |

| Control Flag | Description |
|---|---|
| EAPD PIN MODE 1:0 | Defines if EAPD pin is used as input, output, or bi-directional port (Open Drain) |
| HP SD | 0 = Amp controlled by EAPD pin only (default) / 1 = Amp controlled by power state (pin and FG) only |
| HP SD MODE | 0 = Amp will mute when disabled. (default) / 1 = Amp will shut down (enter a low power state) when disabled |
| HP SD INV | 0 = AMP will power down (or mute) when EAPD pin is low (default) / 1 = Amp will power down (or mute) when EAPD pin is high. |

| HP SD | HP SD MODE | HP SD INV | EAPD Pin State | Headphone Amp State |
|---|---|---|---|---|
| 0 | 0 | 0 | 0 | Amplifier is mute (default[1]) |
| 0 | 0 | 0 | 1 | Amplifier is active |
| 0 | 0 | 1 | 0 | Amplifier is active |
| 0 | 0 | 1 | 1 | Amplifier is mute |
| 0 | 1 | 0 | 0 | Amplifier is in a low power state |
| 0 | 1 | 0 | 1 | Amplifier is active |

**Table 14. Headphone Amp Enable Configuration**


©2014 TEMPO SEMICONDCUTOR, INC..

| HP SD | HP SD MODE | HP SD INV | EAPD Pin State | Headphone Amp State |
|---|---|---|---|---|
| 0 | 1 | 1 | 0 | Amplifier is active |
| 0 | 1 | 1 | 1 | Amplifier is in a low power state |
| 1 | 0 | NA | NA | Amplifier follows pin/function group power stateand will mute when disabled |
| 1 | 1 | NA | NA | Amplifier follows pin/function group power state and will enter a low power state when disabled |

**Table 14. Headphone Amp Enable Configuration**

1.EAPD bit is set to one by default but the EAPD state is 0 after power-on reset because the function group is not in D0. The state after a single or double function group reset will be compliant with ECR15b.

*Note: NOTE: Each Headphone port has its own configuration bits for SD, SD MODE, and SD INV.*

| Analog BEEP enabled | EAPD Pin value[1] | Description |
|---|---|---|
| 0 | Forced to low when in D2 or D3 | Follows description in HD Audio spec. External amplifier is shut down when pin or function group power state is D2 or D3 independent of value in EAPD bit. |
| 1 | Forced low in D2 or D3 unless port is enabled as output | Power state is ignored if port is enabled as output and port EAPD=1 to allow PC_Beep support in D2 and D3 |

**Table 15. EAPD Analog PC_Beep behavior**

1.When pin is enabled as Open Drain or CMOS output.

| AFG Power State | RESET# | Analog PC_BEEP | Port Power State | Pin Behavior |
|---|---|---|---|---|
| D0-D3 | Asserted (Low) | Enabled[1] | - | Active high immediately after power on, otherwise the previous state is retained across FG and link reset events |
| D0-D3 | Asserted (Low) | Disabled | - | The previous state is retained across FG and link reset events |
| D0 | De-Asserted (High) | - | - | Active - Pin reflects EAPD bit unless held low by external source. |
| D1 | De-Asserted (High) | - | D0-D1 | Active - Pin reflects EAPD bit unless held low by external source. |
| D2 | De-Asserted (High) | Disabled | D0-D2 | Pin forced low to disable external amp |
| D2 | De-Asserted (High) | Enabled | D0-D2 | Active - EAPD Pin high if any port EAPD bit =1 and that port also enabled as output. |
| D3 | De-Asserted (High) | Disabled | D0-D3 | Pin forced low to disable external amp |
| D3 | De-Asserted (High) | Enabled | D0-D3 | Active - EAPD Pin high if any port EAPD bit=1 and that port also enabled as output. |
| D3cold | De-Asserted (High) | - | - | Pin forced low to disable external amp |
| D4 | De-Asserted (High) | - | - | Pin forced low to disable external amp |
| D5 | De-Asserted (High) | - | - | Pin Hi-Z (off) |

**Table 16. EAPD Behavior**

1.PC_Beep is automatically routed to ports A, B, D, and F after power-on reset while link reset is active and EAPD will be high to enable an external amplifier. This may be disabled using a vendor specific verb. If the automatic beep path is disabled, beep will still be supportedwith EAPD active in link reset if Analog Beep is manually enabled and at least one port is configured as an output before entering link reset. If the automatic Beep routing is disabled and Analog Beep has not been manually configured before entering link reset, then the EAPD pin will retain its current state.


©2014 TEMPO SEMICONDCUTOR, INC..

**Figure 8. HP EAPD Example to be replaced by single pin for internal amp**

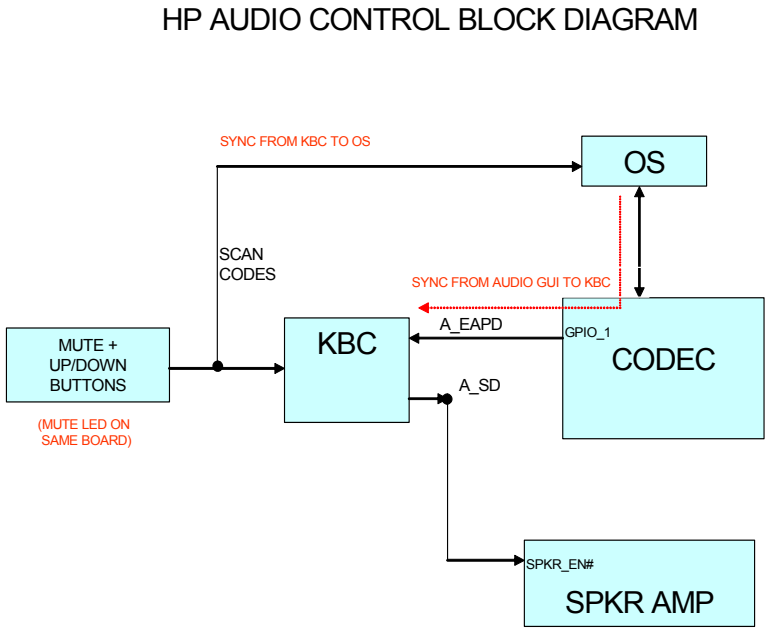


## 2.19. GPIO

### *2.19.1. GPIO Pin mapping and shared functions*

| GPIO# | 48 QFN | 40 QFN | Supply | SPDIF In | SPDIF Out | EAPD | GPI/O | VrefOut | DMIC | Pull Up | Pull Down |
|---|---|---|---|---|---|---|---|---|---|---|---|
| 0 | 47 | 40 | DVDD | YES | YES | YES | YES | | | 50K | 50K |
| 1 | 37 | 31 | AVDD | | | | YES | YES | | | |
| 2 | 31 | 26 | AVDD | | | | YES | YES | | | |
| 3 | 2 | - | DVDD | | | | YES | | CLK | | 50K |
| 4 | 4 | - | DVDD | | | | YES | | IN | | 50K |
| 5 | 40 | - | AVDD | | YES | | YES | | | | 50K |
| 6 | 30 | - | AVDD | | | | YES | | IN | | 50K |

**Table 17. GPIO Pin mapping**

### *2.19.2. SPDIF/GPIO Selection*

2 functions are available on the SPDIFOUT1/GPIO5 pin. To determine which function is enabled, the order of precedence is followed:

1. If GPIO for that pin is enabled, it will override the SPDIF_OUT function.
2. If the GPIOs are not enabled through the AFG, then at reset, the pin is pulled low by an internal pull-down resistor.
3. If the port is enabled as an output, the SPDIF output will be used.


©2014 TEMPO SEMICONDCUTOR, INC..

### 2.19.3. Digital Microphone/GPIO Selection

2 functions are available on the DMIC_CLK/GPIO3, the DMIC_0/GPIO4, and the DMIC_1/GPIO6 pins. To determine which function is enabled, the order of precedence is followed:

1. If GPIOs are not enabled through the AFG, then at reset, the pins are pulled low by an internal pull-down resistor.
2. If the port is not enabled as an input or if the pin is configured as a GPIO, the digital microphone path will be mute.

### 2.19.4. Vref_Out/GPIO Selection

2 functions are available on the VrefOut-A/GPIO1 and VrefOut-E/GPIO2 pins. To determine which function is enabled, the order of precedence is followed:

1. If GPIO is enabled for that pin, it overrides the VrefOut function for that pin.
2. If the GPIO function is not enabled for that pin, then the VrefOut function is enabled and in its programmed state.

### 2.19.5. EAPD/SPDIF_IN/SPDIF_OUT/GPIO0 Selection

4 functions are available on the EAPD/SPDIF_IN/SPDIF_OUT1/GPIO0 pin. To determine which function is enabled, the order of precedence is followed:

1. Default at power-on is EAPD
2. If GPIO is enabled for that pin, it overrides the SPDIF_IN, SPDIF_OUT and EAPD functions for that pin.
3. If the GPIO function is not enabled for that pin, then the SPDIF_IN or SPDIF_OUT function may be enabled by setting the pin input or output enable to 1, respectively. (Setting input and output enable to 1 at the same time will only enable SPDIF_IN)

## 2.20. HD Audio ECR 15b support

Although ECR15b is not yet complete (not a DCN), the 92HD68F will implement complete support for the specification building on the support already present in previous products. ECR 15b features supported are:

- Persistence of many configuration options through bus and function group reset.
- The ability to support port presence detect in D3 even when the HD Audio bus is in a low power state (no clock.)
- Fast resume times from low power states: 1ms D1 to D0, 2ms D2 to D0, 10mS D3 to D0.
- Notification if persistent register settings have been unexpectedly reset.
- SPDIF active in D3 (required)
- The ability to notify the driver that a clock is necessary so entering D3 with the clock stopped is not permissible.

## 2.21. Digital Core Voltage Regulator

The digital core operates fat 1.5V. Many systems require that the CODEC use a single 3.3V digital supply, so an integrated regulator is included on die. The regulator uses pin 9, DVDD, as its voltage source. The output of the LDO is connected to pin 1 and the digital core. A 10uF capacitor must be placed on pin 1 for proper load regulation and regulator stability.


©2014 TEMPO SEMICONDCUTOR, INC..

The digital core voltage regulator is only dependent on DVDD. DVDDIO may be either 3.3 or 1.5V and may precede or follow DVDD in sequence. The CODEC digital logic and I/O (unless referenced to AVDD) will operate in the absence of AVDD. DVDD and AVDD supply sequencing for the application of power and the removal of power is neither defined nor guaranteed. It is common for desktop systems to supply AVDD from the system standby supply and the CODEC will tolerate, indefinitely, the condition where AVDD is active but DVDD and DVDDIO are inactive.


©2014 TEMPO SEMICONDCUTOR, INC..

# 3. CHARACTERISTICS

## 3.1. Electrical Specifications

### *3.1.1. Absolute Maximum Ratings*

Stresses above the ratings listed below can cause permanent damage to the 92HD68F. These ratings, which are standard values for TSI commercially rated parts, are stress ratings only. Functional operation of the device at these or any other conditions above those indicated in the operational sections of the specifications is not implied. Exposure to absolute maximum rating conditions for extended periods can affect product reliability. Electrical parameters are guaranteed only over the recommended operating temperature range.

| Item | Pin | Maximum Rating |
|---|---|---|
| Analog maximum supply voltage | AVdd | 6 Volts |
| Digital maximum supply voltage | DVdd | 5.5 Volts |
| VREFOUT output current | | 5 mA |
| Voltage on any pin relative to ground | | Vss - 0.3 V to Vdd + 0.3 V |
| Operating temperature | | 0 $^{o}$C to +70 $^{o}$C |
| Storage temperature | | -55 $^{o}$C to +125 $^{o}$C |
| Soldering temperature | | Soldering temperature information for all available in the package section of this datasheet. |

**Table 18. Electrical Specification: Maximum Ratings**

### *3.1.2. Recommended Operating Conditions*

| Parameter | | Min. | Typ. | Max. | Units |
|---|---|---|---|---|---|
| Power Supplies | DVDD_Core | 1.4 | | 1.98 | V |
| | DVDD_IO (3.3V signaling) | 3.135 | 3.3 | 3.465 | V |
| | DVDD_IO (1.5V signaling) | 1.418 | 1.5 | 1.583 | V |
| Power Supply Voltage | Digital - 3.3 V | 3.135 | 3.3 | 3.465 | V |
| | Analog - 5 V | 4.75 | 5 | 5.25 | V |
| Ambient Operating Temperature | | 0 | | +70 | °C |
| Case Temperature | $T_{case}$ (48-QFN) | | | +95 | °C |

**Table 19. Recommended Operating Conditions**

***ESD:*** The 92HD68F is an ESD (electrostatic discharge) sensitive device. The human body and test equipment can accumulate and discharge electrostatic charges up to 4000 Volts without detection. Even though the 92HD68F implements internal ESD protection circuitry, proper ESD precautions should be followed to avoid damaging the functionality or performance.


©2014 TEMPO SEMICONDCUTOR, INC..

## 3.2. 92HD68F Analog Performance Characteristics

(Tambient = 25 ºC, AVdd = Supply ± 5%, DVdd = 3.3V ± 5%, AVss=DVss=0V; 20Hz to 20KHz swept sinusoidal input; Sample Frequency = 48 kHz; 0 dB = 1 VRMS, 10KΩ//50pF load, Testbench Characterization BW: 20 Hz – 20 kHz, 0 dB settings on all gain stages)

| Parameter | Conditions | Min | Typ | Max | Unit |
|---|---|---|---|---|---|
| **Digital to Analog Converters** | | | | | |
| Resolution | | | 24 | | Bits |
| Dynamic Range[1]: PCM to All Analog Outputs | -60dB FS signal level, Analog Mixer disabled | 94 | 97 | - | dB |
| SNR[2] - DAC to All Line-Out Ports | Analog Mixer Disabled, PCM data | 97 | 99 | | dB |
| THD+N[3] - DAC to All Line-Out Ports | Analog Mixer Disabled, 0/-1/-3dB FS Signal, PCM data | 83 | 85 | | dBr |
| SNR[2] - DAC to All Headphone Ports | Analog Mixer Disabled, 10KΩ load, PCM data | 97 | 99 | | dB |
| THD+N[3] - DAC to All Headphone Ports | Analog Mixer Disabled, 0/-1/-3dB FS Signal, 10KΩ load, PCM data | 83 | 85 | | dBr |
| SNR[2] - DAC to All Headphone Ports | Analog Mixer Disabled, 32Ω load, PCM data | 98 | 99 | | dB |
| THD+N[3] - DAC to All Headphone Ports | Analog Mixer Disabled, 0/-1/-3dB FS Signal, 32Ω load, PCM data | 70 | 85 | | dBr |
| Any Analog Input (ADC) to DAC Crosstalk | 10KHz Signal Frequency. 0dBV signal applied to ADC, DACs idle, ports enabled as output. | -65 | -95 | - | dB |
| Any Analog Input (ADC) to DAC Crosstalk | 1KHz Signal Frequency see above | -65 | -97 | - | dB |
| DAC L/R crosstalk | DAC to LO or HP 20-15KHz into 10KΩ load | 73 | 81 | | dB |
| DAC L/R crosstalk | DAC to HP 20-15KHz into 32Ω load | 68 | 72 | | dB |
| Gain Error | Analog Mixer Disabled | | | 0.5 | dB |
| Interchannel Gain Mismatch | Analog Mixer Disabled | | .016 | 0.5 | dB |
| D/A Digital Filter Pass Band[4] | | 20 | - | 21,000 | Hz |
| D/A Digital Filter Pass Band Ripple[5] | | | | 0.1 | +/- dB |
| D/A Digital Filter Transition Band | | 21,000 | - | 31,000 | Hz |
| D/A Digital Filter Stop Band | | 31,000 | - | - | Hz |
| D/A Digital Filter Stop Band Rejection[6] | | -100 | -108 | - | dB |
| D/A Out-of-Band Rejection[7] | | -55 | -50 | - | dB |
| Group Delay (48KHz sample rate) | | - | - | 1 | ms |
| Attenuation, Gain Step Size DIGITAL | | - | 0.75 | - | dB |
| DAC Offset Voltage | | - | 0.4 | 20 | mV |
| Deviation from Linear Phase | | - | 1 | 10 | deg. |
| **Analog Outputs** | | | | | |
| Full Scale All Mono/Line-Outs | DAC PCM Data | 1.00 | 1.08 | - | Vrms |
| Full Scale All Mono/Line-Outs | DAC PCM Data | 2.83 | 3.05 | - | Vp-p |

**Table 20. 92HD68F Analog Performance Characteristics**


©2014 TEMPO SEMICONDCUTOR, INC..

| Parameter | Conditions | Min | Typ | Max | Unit |
|---|---|---|---|---|---|
| All Headphone Capable Outputs | 32Ω load | 40 | 47 | - | mW (peak) |
| Amplifier output impedance | Mono/Line Outputs<br>Headphone Outputs | | 150<br>0.1 | | Ohms |
| External load Capacitance | Mono/Line Outputs<br>Headphone Outputs | | 220 | | pF |
| **Analog inputs** | | | | | |
| Full Scale Input Voltage | 0dB Boost @4.75V<br>(input voltage required for 0dB FS output) | 1.05 | 1.31 | - | Vrms |
| All Analog Inputs with boost | 10dB Boost | 0.320 | 0.42 | - | Vrms |
| All Analog Inputs with boost | 20dB Boost | 0.105 | 0.136 | - | Vrms |
| All Analog Inputs with boost | 30dB Boost | 0.032 | 0.042 | - | Vrms |
| Boost Gain Accuracy | | -2 | 0.6 | 2 | dB |
| Input Impedance | | - | 75 | - | KΩ |
| Input Capacitance | | - | 15 | - | pF |
| **Analog Mixer** | | | | | |
| Dynamic Range: PCM to All Analog Outputs | -60dB FS signal level Analog Beep enabled all other mixer inputs mute | 93 | 93 | | |
| SNR[2] - All Line-Inputs to all Line Outputs | All inputs unmuted, single line input driven by ATE. | 85 | 85 | | dB |
| THD+N[3] - All Line-Inputs to all Line Outputs | 0dB Full Scale Input on one input, all others silent. | 65 | 83 | | dBr |
| SNR[2] - DAC to All Ports | Analog Mixer Enabled, PCM data, all others inputes mute. | 85 | 94 | | dB |
| THD+N[3] - DAC to All Line-Out Ports | Analog Mixer Enabled, 0/-1/-3dB FS signal, PCM data, all others inputes unmute/silent | 75 | 81 | | dBr |
| THD+N[3] - DAC to All Ports | Analog Mixer Enabled, 0dB FS Signal, PCM data, all others inputes unmute/silent | 65 | 78 | | dBr |
| Attenuation, Gain Step Size ANALOG | | - | 1.5 | - | dB |
| **Analog to Digital Converter** | | | | | |
| Resolution | | | 24 | | Bits |
| Full Scale Input Voltage | 0dB Boost<br>(input voltage required to generate 0dBFS per AES 17) | 1.05 | 1.31 | | |
| Dynamic Range[1], All Analog Inputs to A/D | High Pass Filer Enabled, -60dB FS, No boost | 93 | 94 | | dB |
| Full Scale Input Voltage | 20dB Boost<br>(input voltage required to generate 0dBFS per AES 17) | 0.105 | 0.136 | | |
| Dynamic Range[1], All Analog Inputs to A/D | 20dB Boost<br>High Pass Filter Enabled, -60dB FS | 81 | 90 | | |
| SNR[2] - All Analog Inputs to A/D | High Pass Filter Enabled | 93 | 94 | | |
| THD+N[3] All Analog Inputs to A/D | High Pass Filter enabled, -1/-3dB FS signal level | 78 | 80 | | dB |

**Table 20. 92HD68F Analog Performance Characteristics**


©2014 TEMPO SEMICONDCUTOR, INC..

| Parameter | Conditions | Min | Typ | Max | Unit |
|---|---|---|---|---|---|
| THD+N[3] All Analog Inputs to A/D | 20dB Boost, High Pass Filter enabled, -1/-3dB FS signal level | 72 | 80 | | dB |
| Analog Frequency Response[8] | | 10 | - | 30,000 | Hz |
| A/D Digital Filter Pass Band[4] | | 20 | - | 21,000 | Hz |
| A/D Digital Filter Pass Band Ripple[5] | | | | 0.1 | +/- dB |
| A/D Digital Filter Transition Band | | 21,000 | - | 31,000 | Hz |
| A/D Digital Filter Stop Band | | 31,000 | - | - | Hz |
| A/D Digital Filter Stop Band Rejection[6] | | -100 | -127 | - | dB |
| Group Delay | 48 KHz sample rate | - | - | 1 | ms |
| Any unselected analog Input to ADC Crosstalk | 10KHz Signal Frequency | -65 | -94 | - | dB |
| Any unselected analog Input to ADC Crosstalk | 1KHz Signal Frequency | -65 | -94 | - | dB |
| ADC L/R crosstalk | Any selected input to ADC 20-15Khz | -65 | -84 | | dB |
| DAC to ADC crosstalk | DAC output 0dBFS. All outputs loaded. Input to ADC open. 20-15Khz | -65 | -90 | | dB |
| Spurious Tone Rejection[9] | | - | -102 | - | dB |
| Attenuation, Gain Step Size (analog) | | - | 1.5 | - | dB |
| Interchannel Gain Mismatch ADC | | - | 0.161 | 0.5 | dB |
| **Power Supply** | | | | | |
| Power Supply Rejection Ratio | 10kHz | - | -60 | - | dB |
| Power Supply Rejection Ratio | 1kHz | - | -70 | - | dB |
| D0 Didd[10] | 3.3V, 1.8V, 1.5V | | 22 | | mA |
| D0 Aidd[10] | 4.75V | | 60 | | mA |
| D0 Didd[11] | 3.3V, 1.8V, 1.5V | | 11.5 | | mA |
| D0 Aidd[11] | 4.75V | | 33 | | mA |
| D1 Didd[12] | 3.3V, 1.8V, 1.5V | | 6.35 | | mA |
| D1 Aidd[12] | 4.75V | | 27.5 | | mA |
| D2 Didd | 3.3V, 1.8V, 1.5V | | 6.33 | | mA |
| D2 Aidd | 4.75V | | 15 | | mA |
| D3 (Beep enabled) Didd[13] | 3.3V, 1.8V, 1.5V | | 1.84 | | mA |
| D3 (Beep enabled) Aidd[13] | 4.75V | | 5.74 | | mA |
| D3 Didd[13] | 3.3V, 1.8V, 1.5V | | 1 | | mA |
| D3 Aidd[13] | 4.75V, | | 2.78 | | mA |
| D3cold Didd[13] | 3.3V, 1.8V, 1.5V | | 0.4 | | mA |
| D3cold Aidd[13] | 4.75V | | 2.78 | | mA |
| Vendor D4 Didd | 3.3V, 1.8V, 1.5V | | 0.4 | | mA |
| Vendor D4 Aidd | 4.75V | | 2.78 | | mA |

**Table 20. 92HD68F Analog Performance Characteristics**


©2014 TEMPO SEMICONDCUTOR, INC..

| Parameter | Conditions | Min | Typ | Max | Unit |
|---|---|---|---|---|---|
| Vendor D5 Didd | 3.3V, 1.8V, 1.5V | | 0.4 | | mA |
| Vendor D5 Aidd | 4.75V | | 0.25 | | mA |
| One Stereo ADC Didd | 3.3V, 1.8V, 1.5V | | 3.63 | | mA |
| One Stereo ADC Aidd | 4.75 | | 4.13 | | mA |
| One Stereo DAC Didd | 3.3V, 1.8V, 1.5V | | 2.41 | | mA |
| One Stereo DAC Aidd | 4.75V | | 5.33 | | mA |
| **Voltage Reference Outputs** | | | | | |
| VREFOut[14] | | - | 0.5 X AVdd | - | V |
| VREFOut Drive | | | 1.6 | | mA |
| VREFILT (VAG) | | | 0.45 X AVdd | | V |
| **Phased Locked Loop** | | | | | |
| PLL lock time | | | 96 | 200 | usec |
| PLL (or HD Audio Bit CLK) 24MHz clock jitter | | | 150 | 500 | psec |
| **ESD / Latchup** | | | | | |
| IEC1000-4-2 | | 1 | | | Level |
| JESD22-A114-B | | 2 | | | Class |
| JESD22-C101 | | 4 | | | Class |

**Table 20. 92HD68F Analog Performance Characteristics**

1.Dynamic Range is the ratio of the full scale signal to the noise output with a -60dBFS signal as defined in AES17 as SNR in the presence of signal and outlined in AES6id, measured “A weighted” over 20 Hz to 20 kHz bandwidth
2.Ratio of Full Scale signal to idle channel noise output is measured “A weighted” over a 20 Hz to a 20 kHz bandwidth. (AES17-1991 Idle Channel Noise or EIAJ CP-307 Signal-to-noise Ratio).
3.THD+N ratio as defined in AES17 and outlined in AES6id,non-weighted, over 20 Hz to 20 kHz bandwidth.Results at the jack are dependent on external components and will likely be 1 - 2dB worse.
4.Peak-to-Peak Ripple over Passband meets ± 0.125dB limits, 48 kHz or 44.1 kHz Sample Frequency. 1dB limit.
5.Peak-to-Peak Ripple over Passband meets ± 0.125dB limits, 48 kHz or 44.1 kHz Sample Frequency. 1dB limit.
6.Stop Band rejection determines filter requirements. Out-of-Band rejection determines audible noise.
7.The integrated Out-of-Band noise generated by the DAC process, during normal PCM audio playback, over a bandwidth 28.8 to 100 kHz, with respect to a 1 Vrms DAC output.
8.± 1dB limits for Line Output & 0 dB gain, at -20dBV
9.Spurious tone rejection is tested with ADC dither enabled and compared to ADC performance without dither.
10.All functions/converters active, pin complexes enabled, two FDX streams, line (10Kohm) loads. Add 24mA analog current per stereo 32 ohm headphone.
11.One stereo DAC and corresponding pin widgets enabled (playback mode)
12.Mixer enabled
13.Idle measurement D3 set for minimum clicks/pops (biases and min. amps. on)
14.Can be set to 0.5 or 0.8 AVdd.


©2014 TEMPO SEMICONDCUTOR, INC..

## 3.3. AC Timing Specs

### *3.3.1. HD Audio Bus Timing*

| Parameter | Definition | Symbol | Min | Typ | Max | Units |
|---|---|---|---|---|---|---|
| BCLK Frequency | Average BCLK frequency | | 23.9976 | 24.0 | 24.0024 | Mhz |
| BCLK Period | Period of BCLK including jitter | Tcyc | 41.163 | 41.67 | 42.171 | ns |
| BCLK High Phase | High phase of BCLK | T_high | 17.5 | | 24.16 | ns |
| BCLK Low Phase | Low phase of BCLK | T_low | 17.5 | | 24.16 | ns |
| BCLK jitter | BCLK jitter | | | 150 | 500 | ps |
| SDI delay | Time after rising edge of BCLK that SDI becomes valid | T_tco | 3 | | 11 | ns |
| SDO setup | Setup for SDO at both rising and falling edges of BCLK | T_su | 5 | | | ns |
| SDO hold | Hold for SDO at both rising and falling edges of BCLK | T_h | 5 | | | ns |

**Table 21. HD Audio Bus Timing**

**Figure 9. HD Audio Bus Timing**

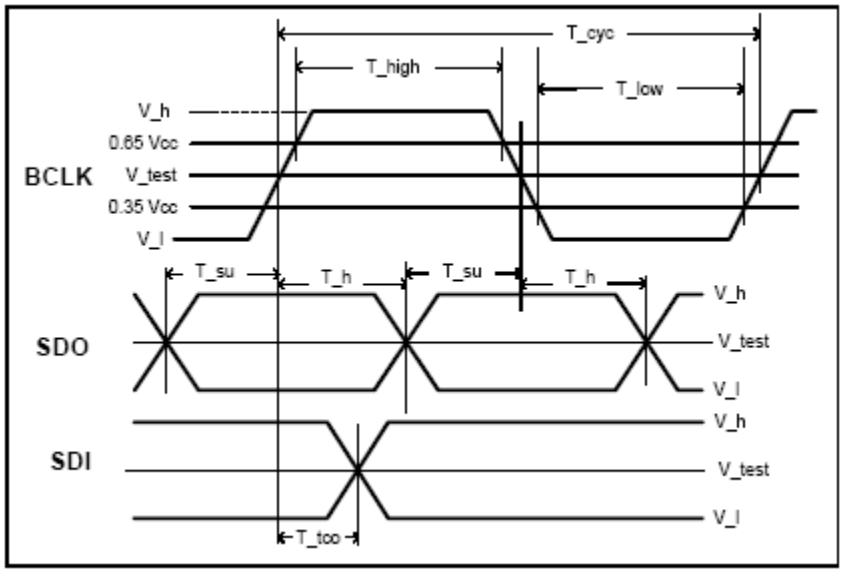


### *3.3.2. SPDIF Timing*

| Parameter | Definition | Symbol | Min | Typ | Max | Units |
|---|---|---|---|---|---|---|
| SPDIF_OUT Frequency | highest rate of encoded signal 64 times the sample rate | | 2.8224 | 3.072 | 12.288 | MHz |
| SPDIF_OUT unit interval | 1/(128 times the sample rate) | UI | 177.15 | 162.76 | 40.69 | ns |
| SPDIF_OUT jitter | SPDIF_OUT jitter | | | | 4.43 | ns |

**Table 22. SPDIF Timing**


©2014 TEMPO SEMICONDCUTOR, INC..

| Parameter | Definition | Symbol | Min | Typ | Max | Units |
|---|---|---|---|---|---|---|
| SPDIF_OUT rise time | | T_rise | | | 15 | ns |
| SPDIF_OUT fall time | | T_fall | | | 15 | ns |

**Table 22. SPDIF Timing**

### *3.3.3. Digital Microphone Timing*

| Parameter | Definition | Symbol | Min | Typ | Max | Units |
|---|---|---|---|---|---|---|
| DMIC_CLK Frequency | Average DMIC_CLK frequency | | 1.176 | 2.352 | 4.704 | MHz |
| DMIC_CLK Period | Period of DMIC_CLK | Tdmic_cyc | 850.34 | 425.17 | 212.59 | ns |
| DMIC_CLK jitter | DMIC_CLK jitter | | | | 5000 | ps |
| DMIC Data setup | Setup for the microphone data at both rising and falling edges of DMIC_CLK | Tdmic_su | 5 | | | ns |
| DMIC Data hold | Hold for the microphone data at both rising and falling edges of DMIC_CLK | Tdmic_h | 5 | | | ns |

**Table 23. Digital Mic timing**

### *3.3.4. GPIO Characteristics*

| Parameter | Definition | Symbol | Min | Typ | Max | Units |
|---|---|---|---|---|---|---|
| Input High Voltage | input level at or above which a 1 is reliably recorded | Vih | 0.6 x VDD | | | V |
| Input Low Voltage | input level at or below which a 0 is reliably recorded<br>VDD may be DVDD or AVDD | Vil | | | 0.35 x VDD | V |
| Output High Voltage | iout = 4mA<br>VDD may be DVDD or AVDD depending on pin | Voh | 0.9 x VDD | | | V |
| Output Low Voltage | iout = -4mA<br>VDD may be DVDD or AVDD depending on pin | Vol | | | 0.1 x VDD | V |
| Input rise/fall time | transition time between 10% and 90% of supply | T_rise/T_fall | | | 10 | ns |
| Input/Tristate High Leakage Current | Vin = VDD<br>VDD may be DVDD or AVDD depending on pin (does not include pull-up or pull-down resistor if present) | | | 0.5 | | uA |
| Input/Tristate Low Leakage Current | Vin = 0<br>VDD may be DVDD or AVDD depending on pin (does not include pull-up or pull-down resistor if present) | | | -50 | | uA |

**Table 24. GPIO Characteristics**


©2014 TEMPO SEMICONDCUTOR, INC..

# 4. FUNCTIONAL BLOCK DIAGRAMS

## 4.1. 48QFP

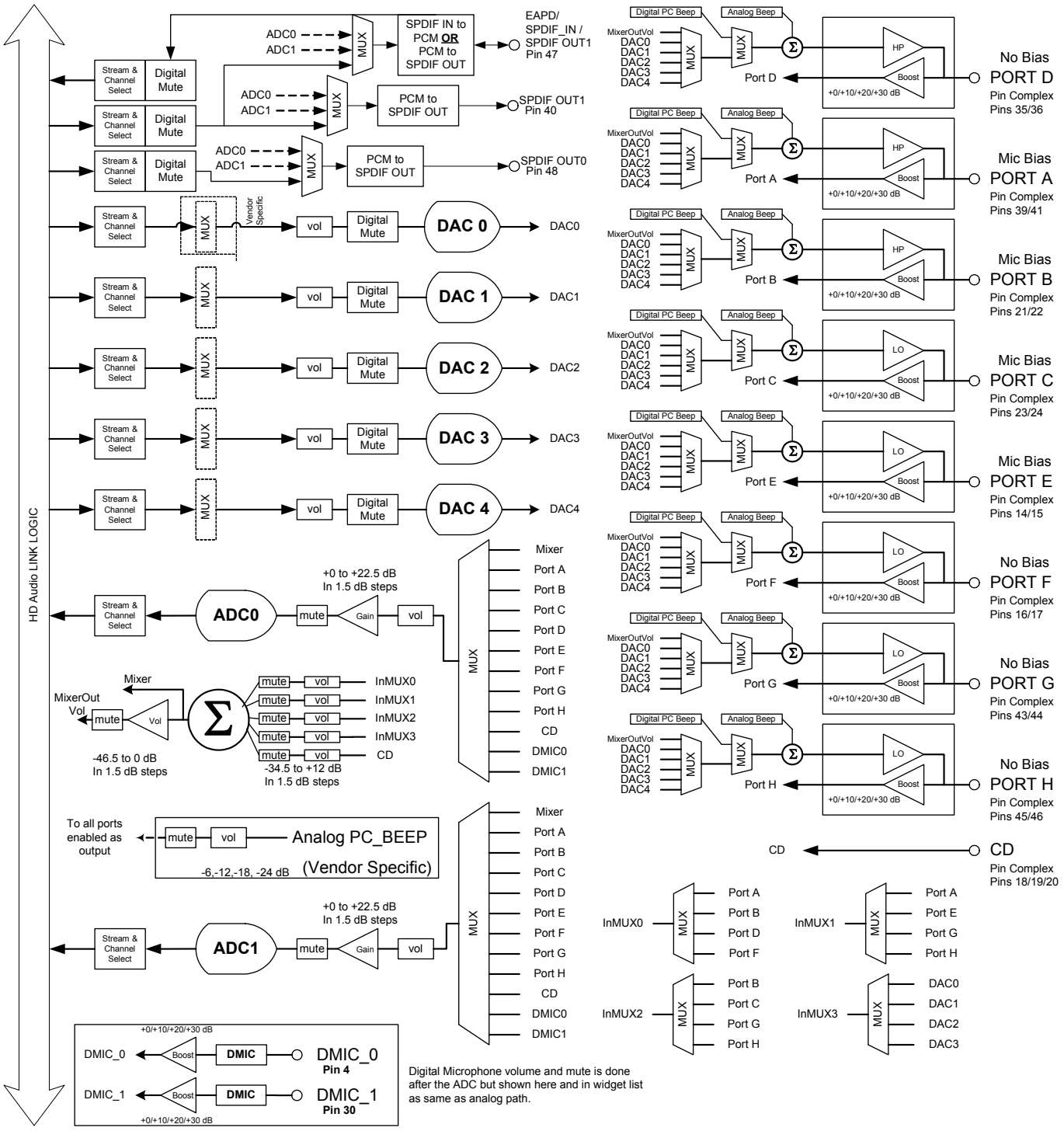


**Figure 10. 48QFP Functional Block Diagram**


©2014 TEMPO SEMICONDCUTOR, INC..

## 4.2. 40QFN

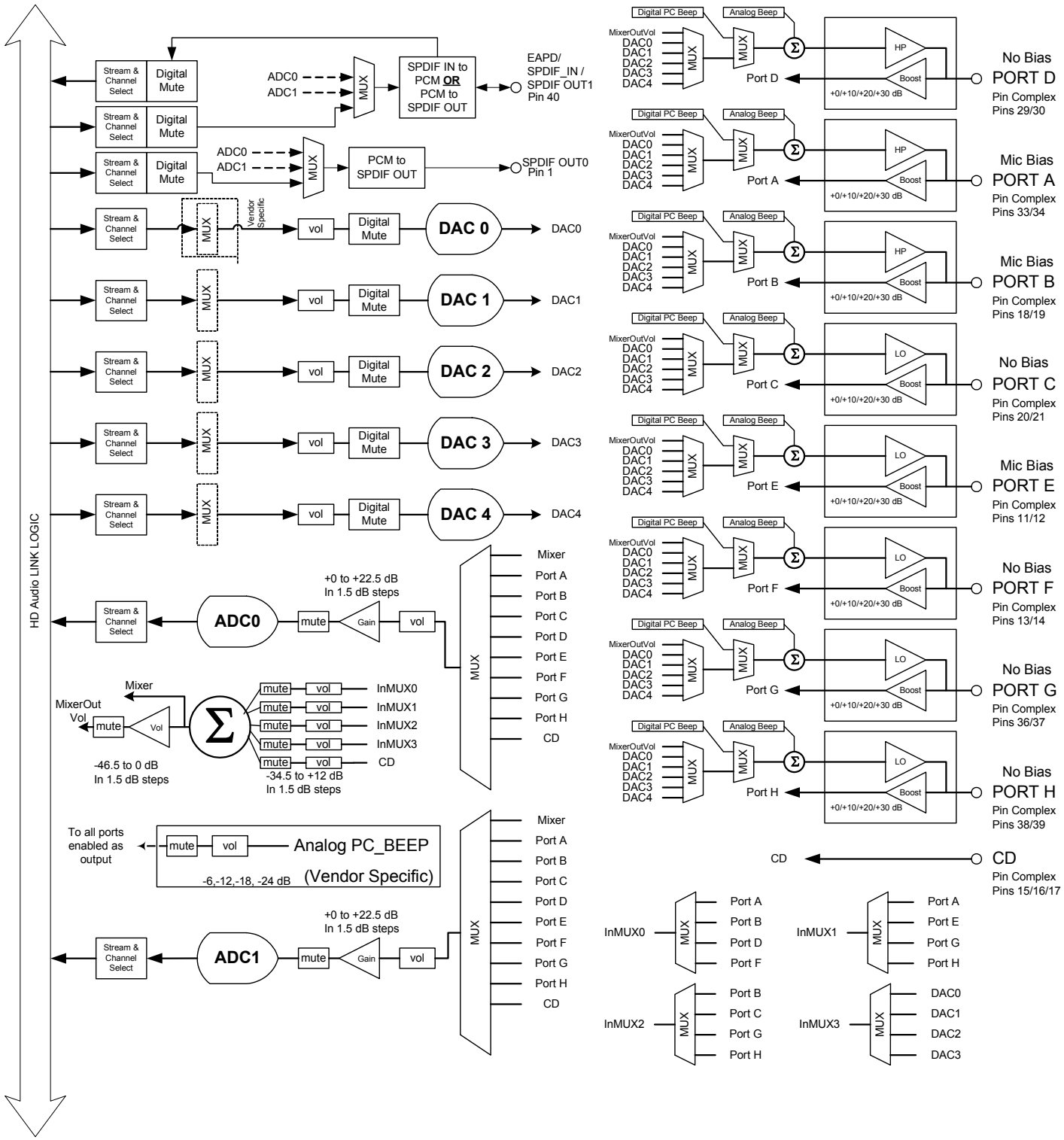


**Figure 11. 40QFN Functional Block Diagram**


©2014 TEMPO SEMICONDCUTOR, INC..

## 5. WIDGET BLOCK DIAGRAM

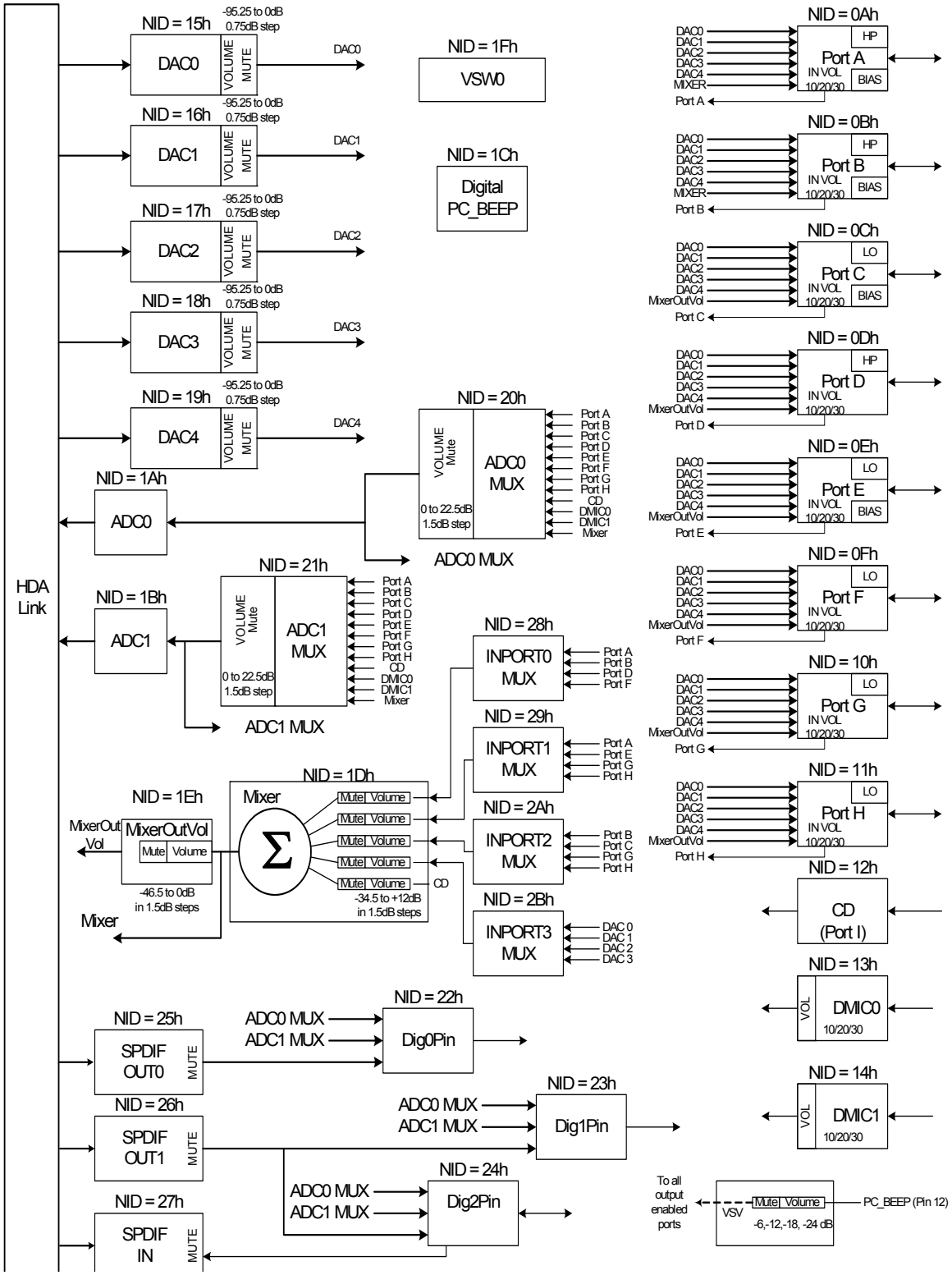


**Figure 12. Widget Diagram (same for both package option)**


©2014 TEMPO SEMICONDCUTOR, INC..

# 6. PORT CONFIGURATIONS

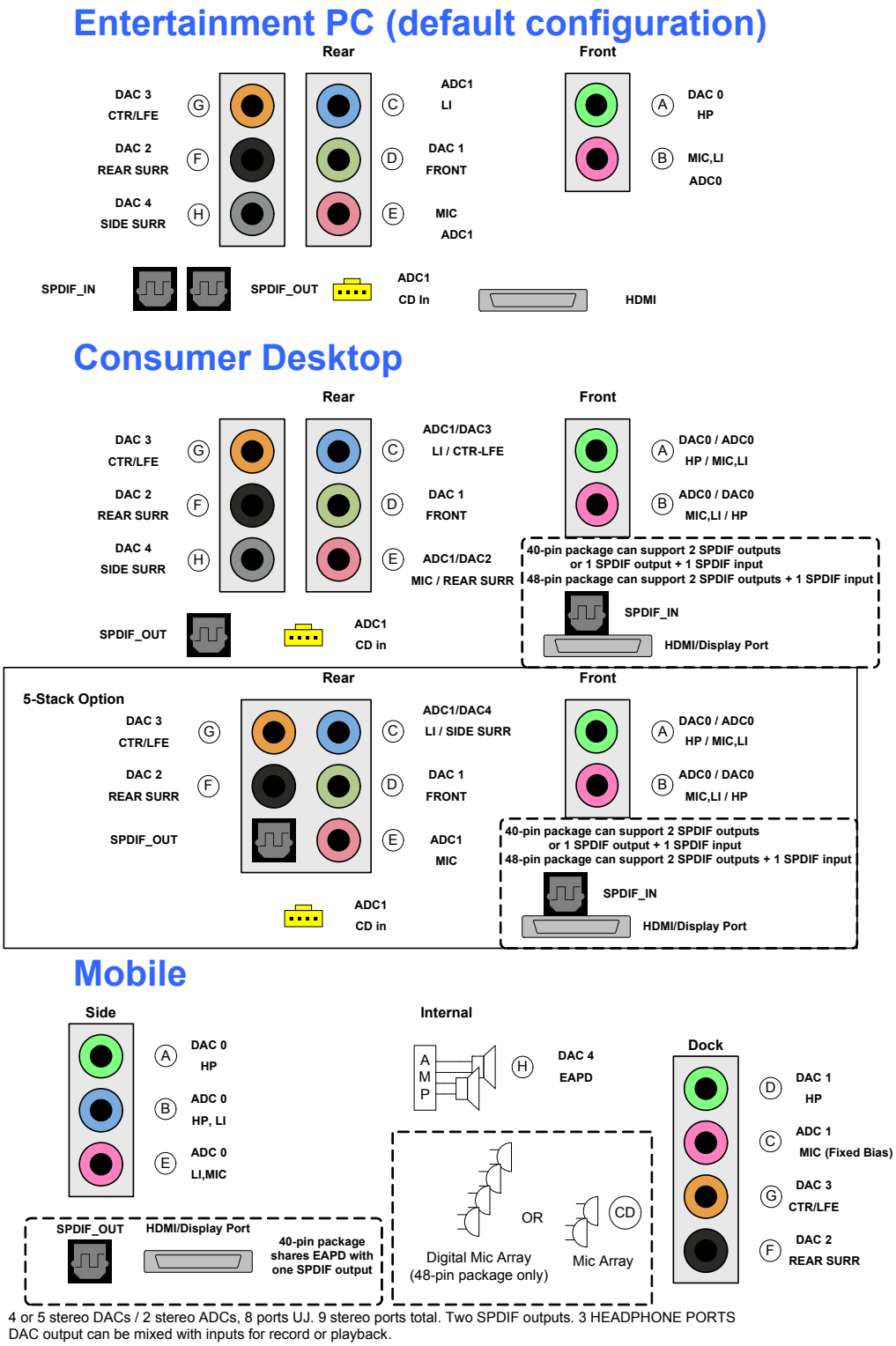


**Figure 13. Port Configurations**


©2014 TEMPO SEMICONDCUTOR, INC..

## 6.1. Pin Configuration Default Register Settings

The following table shows the Pin Widget Configuration Default settings. Consumer Desktop 5-jack implementation with 2 jacks in front and 5 or 6 jacks in rear. The front panel headphone and mic are dedicated to RTC as suggested by Microsoft. SPDIF_OUT is implemented as an SPDIF optical out jack and a second port as HDMI. SPDIF_In is implemented as an optical input. Digital Microphones are listed as part of the muxed capture device.

| Pin Name | Port | Location | Device | Connection | Color | Misc | Assoc. | Seq |
|---|---|---|---|---|---|---|---|---|
| PortAPin | Jack 00b | Main Front 2h | HP Out 2h | 1/8 inch Jack 1h | Green 4h | Jack Detect Override=0 | 1h | 0h |
| PortBPin | Jack 00b | Main Front 2h | Mic In Ah | 1/8 inch Jack 1h | Pink 9h | Jack Detect Override=0 | 2h | 0h |
| PortCPin | Jack 00b | Main Rear 1h | Line In 8h | 1/8 inch Jack 1h | Blue 3h | Jack Detect Override=0 | 4h | 0h |
| PortDPin | Jack 00b | Main Rear 1h | Line Out 0h | 1/8 inch Jack 1h | Green 4h | Jack Detect Override=0 | 3h | 0h |
| PortEPin | Jack 00b | Main Rear 1h | Mic In Ah | 1/8 inch Jack 1h | Pink 9h | Jack Detect Override=0 | 4h | Eh |
| PortFPin | Jack 00b | Main Rear 1h | Line Out 0h | 1/8 inch Jack 1h | Black 1h | Jack Detect Override=0 | 3h | 2h |
| PortGPin | Jack 00b | Main Rear 1h | Line Out 0h | 1/8 inch Jack 1h | Orange 6h | Jack Detect Override=0 | 3h | 1h |
| PortHPin | Jack 00b | Main Rear 1h | Line Out 0h | 1/8 inch Jack 1h | Gray 2h | Jack Detect Override=0 | 3h | 4h |
| DMIC0 (48pin) | Internal 10b | Internal 010000b | Mic In Ah | ATAPI 3h | Unknown 0h | Jack Detect Override=1 | 4h | 2h |
| DMIC0 (40pin) | NA | NA | NA | NA | NA | NA | NA | NA |
| DMIC1 (48pin) | Internal 10b | Internal 010000b | Mic In Ah | ATAPI 3h | Unknown 0h | Jack Detect Override=1 | 4h | 3h |
| DMIC1 (40pin) | NA | NA | NA | NA | NA | NA | NA | NA |
| Dig0Pin | Jack 00b | Main Rear 000001b | SPDIF Out 4h | optical 5h | Black 1h | Jack Detect Override=1 | 5h | 0h |
| DIG1pin(48pin) | Internal 10b | Internal 011000b | Dig Other Out 5h | Other Digital 6h | Unknown 0h | Jack Detect Override=1 | 6h | 0h |
| DIG1pin(40pin) | NA | NA | NA | NA | NA | NA | NA | NA |
| Dig2Pin | Jack 00b | Main Rear 000001b | SPDIF IN Ch | optical 5h | Gray 2h | Jack Detect Override=1 | 7h | 0h |
| CDPin | Internal 10b | Int ATAPI 011001b | CD 3h | ATAPI 3h | Unknown 0h | Jack Detect Override=0 | 4h | 1h |

**Table 25. Pin Configuration Default Settings**


©2014 TEMPO SEMICONDCUTOR, INC..

# 7. WIDGET INFORMATION

| Bits [39:32] | Bits [31:28] | BITS [27:20] | BITS[19:16] | BITS [15:0] |
|---|---|---|---|---|
| Reserved | CODEC Address | NID | Verb ID (4-bit) | Payload Data (16-bit) |

**Table 26. Command Format for Verb with 4-bit Identifier**

| Bits [39:32] | Bits [31:28] | BITS [27:20] | BITS[19:8] | BITS [7:0] |
|---|---|---|---|---|
| Reserved | CODEC Address | NID | Verb ID (12-bit) | Payload Data (8-bit) |

**Table 27. Command Format for Verb with 12-bit Identifier**

There are two types of responses: Solicited and Unsolicited. Solicited responses are provided as a direct response to an issued command and will be provided in the frame immediately following the command. Unsolicited responses are provided by the CODEC independent of any command. Unsolicited responses are the result of CODEC events such as a jack insertion detection. The formats for Solicited Responses and Unsolicited Responses are shown in the tables below. The “Tag” field in bits [31:28] of the Unsolicited Response identify the event.

| Bit [35] | Bit [34] | BITS [33:32] | BITS[31:0] |
|---|---|---|---|
| Valid (Valid = 1) | UnSol = 0 | Reserved | Response |

**Table 28. Solicited Response Format**

| Bit [35] | Bit [34] | BITS [33:32] | BITS[31:28] | BITS [27:0] |
|---|---|---|---|---|
| Valid (Valid = 1) | UnSol = 1 | Reserved | Tag | Response |

**Table 29. Unsolicited Response Format**


©2014 TEMPO SEMICONDCUTOR, INC..

## 7.1. Widget List

| ID | Widget Name | Description |
|---|---|---|
| 00h | Root | Root Node |
| 01h | AFG | Audio Function Group |
| 0Ah | Port A | Port A Pin Widget |
| 0Bh | Port B | Port B Pin Widget |
| 0Ch | Port C | Port C Pin Widget |
| 0Dh | Port D | Port D Pin Widget |
| 0Eh | Port E | Port E Pin Widget |
| 0Fh | Port F | Port F Pin Widget |
| 10h | Port G | Port G Widget |
| 11h | Port H | Port H Pin Widget |
| 12h | CD | CD input |
| 13h | DigMic0 | Digital Microphone Pin Widget (48pin only, Rsvd in 40pin) |
| 14h | DigMic1 | Digital Microphone Pin Widget (48pin only, Rsvd in 40pin) |
| 15h | DAC0 | DAC |
| 16h | DAC1 | DAC |
| 17h | DAC2 | DAC |
| 18h | DAC3 | DAC |
| 19h | DAC4 | DAC |
| 1Ah | ADC0 | ADC |
| 1Bh | ADC1 | ADC |
| 1Ch | PCBeep | Digital PC Beep Widget |
| 1Dh | Mixer | Input Mixer (Input Ports, DACs, Analog PC_Beep) |
| 1Eh | MixerOutVol | Volume control for analog mixer |
| 1Fh | DAC5 | DAC |
| 20h | ADC0Mux | ADC Mux with volume and mute |
| 21h | ADC1Mux | ADC Mux with volume and mute |
| 22h | Dig0Pin | Digital I/O Pin |
| 23h | Dig1Pin | Digital I/O Pin (48pin only, Rsvd in 40pin) |
| 24h | Dig2Pin | Digital I/O Pin |
| 25h | SPDIFOut0 | Stereo Output for SPDIF_Out |
| 26h | SPDIFOut1 | Stereo Output for SPDIF_Out |
| 27h | SPDIFIN | SPDIF Input |
| 28h | InPort0Mux | Input port pre-select for mixer |
| 29h | InPort1Mux | Input port pre-select for mixer |
| 2Ah | InPort2Mux | Input port pre-select for mixer |

**Table 30. Widget List**


©2014 TEMPO SEMICONDCUTOR, INC..

| ID | Widget Name | Description |
|---|---|---|
| 2Bh | InPort3Mux | Input port pre-select for mixer |
| 2Ch | VSW | Vendor Specific Widget |

**Table 30. Widget List**

## 7.2. Root (NID = 00h): VendorID

| Reg | Byte 4 (Bits 31:24) | Byte 3 (Bits 23:16) | Byte 2 (Bits 15:8) | Byte 1 (Bits 7:0) |
|---|---|---|---|---|
| Set | | | | |
| Get | F0000h | | | |

| Field Name | Bits | R/W | Default | Reset |
|---|---|---|---|---|
| Vendor | 31:16 | R | 111Dh | N/A |
| | Vendor ID. | | | |
| DeviceFix | 15:8 | R | see table below | N/A |
| | Device ID. | | | |
| DeviceProg | 7:0 | R | see table below | N/A |
| | Device ID. | | | |

| Device | Device ID | Package | HD Audio Bus Voltage |
|---|---|---|---|
| 92HD89E3 | 76CCh | 48QFP | DVDDIO selectable |
| 92HD89E2 | 76CDh | 40QFN | 3.3V‘ |
| 92HD89E1 | 76CEh | 40QFN | 1.5V |


©2014 TEMPO SEMICONDCUTOR, INC..

## 7.3. Root (NID = 00h): RevID

| Reg | Byte 4 (Bits 31:24) | Byte 3 (Bits 23:16) | Byte 2 (Bits 15:8) | Byte 1 (Bits 7:0) |
|---|---|---|---|---|
| Set | | | | |
| Get | F0002h | | | |

| Field Name | Bits | R/W | Default | Reset |
|---|---|---|---|---|
| Rsvd | 31:24 | R | 00h | N/A (Hard-coded) |
| | Reserved. | | | |
| Major | 23:20 | R | 1h | N/A (Hard-coded) |
| | Major rev number of compliant HD Audio spec. | | | |
| Minor | 19:16 | R | 0h | N/A (Hard-coded) |
| | Minor rev number of compliant HD Audio spec. | | | |
| RevisionFix | 15:12 | R | xh | N/A (Hard-coded) |
| | Vendor's rev number for this device. | | | |
| RevisionProg | 11:8 | R | xh | N/A (Hard-coded) |
| | Vendor's rev number for this device. | | | |
| SteppingFix | 7:4 | R | xh | N/A (Hard-coded) |
| | Vendor stepping number within the Vendor RevID. | | | |
| SteppingProg | 3:0 | R | xh | N/A (Hard-coded) |
| | Vendor stepping number within the Vendor RevID. | | | |

### *7.3.1. Root (NID = 00h): NodeInfo*

| Reg | Byte 4 (Bits 31:24) | Byte 3 (Bits 23:16) | Byte 2 (Bits 15:8) | Byte 1 (Bits 7:0) |
|---|---|---|---|---|
| Set | | | | |
| Get | F0004h | | | |


©2014 TEMPO SEMICONDCUTOR, INC..

| Field Name | Bits | R/W | Default | Reset |
|---|---|---|---|---|
| Rsvd2 | 31:24 | R | 00h | N/A (Hard-coded) |
| | Reserved. | | | |
| StartNID | 23:16 | R | 01h | N/A (Hard-coded) |
| | Starting node number (NID) of first function group | | | |
| Rsvd1 | 15:8 | R | 00h | N/A (Hard-coded) |
| | Reserved. | | | |
| TotalNodes | 7:0 | R | 01h | N/A (Hard-coded) |
| | Total number of nodes | | | |

## 7.4. AFG (NID = 01h): NodeInfo

| Reg | Byte 4 (Bits 31:24) | Byte 3 (Bits 23:16) | Byte 2 (Bits 15:8) | Byte 1 (Bits 7:0) |
|---|---|---|---|---|
| Set | | | | |
| Get | F0004h | | | |

| Field Name | Bits | R/W | Default | Reset |
|---|---|---|---|---|
| Rsvd2 | 31:24 | R | 00h | N/A (Hard-coded) |
| | Reserved. | | | |
| StartNID | 23:16 | R | 0Ah | N/A (Hard-coded) |
| | Starting node number for function group subordinate nodes. | | | |
| Rsvd1 | 15:8 | R | 00h | N/A (Hard-coded) |
| | Reserved. | | | |
| TotalNodes | 7:0 | R | 22h | N/A (Hard-coded) |
| | Total number of nodes. | | | |


©2014 TEMPO SEMICONDCUTOR, INC..

### 7.4.1. AFG (NID = 01h): FGType

| Reg | Byte 4 (Bits 31:24) | Byte 3 (Bits 23:16) | Byte 2 (Bits 15:8) | Byte 1 (Bits 7:0) |
|---|---|---|---|---|
| Set | | | | |
| Get | F0005h | | | |

| Field Name | Bits | R/W | Default | Reset |
|---|---|---|---|---|
| Rsvd | 31:9 | R | 000000h | N/A (Hard-coded) |
| | Reserved. | | | |
| UnSol | 8 | R | 1h | N/A (Hard-coded) |
| | Unsolicited response supported: 1 = yes, 0 = no. | | | |
| NodeType | 7:0 | R | 1h | N/A (Hard-coded) |
| | Function group type:<br>00h = Reserved<br>01h = Audio Function Group<br>02h = Vendor Defined Modem Function Group<br>03h-7Fh = Reserved<br>80h-FFh = Vendor Defined Function Group | | | |

### 7.4.2. AFG (NID = 01h): AFGCap

| Reg | Byte 4 (Bits 31:24) | Byte 3 (Bits 23:16) | Byte 2 (Bits 15:8) | Byte 1 (Bits 7:0) |
|---|---|---|---|---|
| Set | | | | |
| Get | F0008h | | | |

| Field Name | Bits | R/W | Default | Reset |
|---|---|---|---|---|
| Rsvd3 | 31:17 | R | 00h | N/A (Hard-coded) |
| | Reserved. | | | |
| BeepGen | 16 | R | 1h | N/A (Hard-coded) |
| | Beep generator present: 1 = yes, 0 = no. | | | |


©2014 TEMPO SEMICONDCUTOR, INC..

| Field Name | Bits | R/W | Default | Reset |
|---|---|---|---|---|
| Rsvd2 | 15:12 | R | 0h | N/A (Hard-coded) |
| | Reserved. | | | |
| InputDelay | 11:8 | R | Dh | N/A (Hard-coded) |
| | Typical latency in frames. Number of samples between when the sample is received as an analog signal at the pin and when the digital representation is transmitted on the HD Audio link. | | | |
| Rsvd1 | 7:4 | R | 0h | N/A (Hard-coded) |
| | Reserved. | | | |
| OutputDelay | 3:0 | R | Dh | N/A (Hard-coded) |
| | Typical latency in frames. Number of samples between when the signal is received from the HD Audio link and when it appears as an analog signal at the pin. | | | |

### *7.4.3. AFG (NID = 01h): PCMCap*

| Reg | Byte 4 (Bits 31:24) | Byte 3 (Bits 23:16) | Byte 2 (Bits 15:8) | Byte 1 (Bits 7:0) |
|---|---|---|---|---|
| Set | | | | |
| Get | F000Ah | | | |

| Field Name | Bits | R/W | Default | Reset |
|---|---|---|---|---|
| Rsvd2 | 31:21 | R | 000h | N/A (Hard-coded) |
| | Reserved. | | | |
| B32 | 20 | R | 0h | N/A (Hard-coded) |
| | 32 bit audio format support: 1 = yes, 0 = no. | | | |
| B24 | 19 | R | 1h | N/A (Hard-coded) |
| | 24 bit audio format support: 1 = yes, 0 = no. | | | |
| B20 | 18 | R | 1h | N/A (Hard-coded) |
| | 20 bit audio format support: 1 = yes, 0 = no. | | | |


©2014 TEMPO SEMICONDCUTOR, INC..

| Field Name | Bits | R/W | Default | Reset |
|---|---|---|---|---|
| B16 | 17 | R | 1h | N/A (Hard-coded) |
| | 16 bit audio format support: 1 = yes, 0 = no. | | | |
| B8 | 16 | R | 0h | N/A (Hard-coded) |
| | 8 bit audio format support: 1 = yes, 0 = no. | | | |
| Rsvd1 | 15:12 | R | 0h | N/A (Hard-coded) |
| | Reserved. | | | |
| R12 | 11 | R | 0h | N/A (Hard-coded) |
| | 384kHz rate support: 1 = yes, 0 = no. | | | |
| R11 | 10 | R | 1h | N/A (Hard-coded) |
| | 192kHz rate support: 1 = yes, 0 = no. | | | |
| R10 | 9 | R | 0h | N/A (Hard-coded) |
| | 176.4kHz rate support: 1 = yes, 0 = no. | | | |
| R9 | 8 | R | 1h | N/A (Hard-coded) |
| | 96kHz rate support: 1 = yes, 0 = no. | | | |
| R8 | 7 | R | 1h | N/A (Hard-coded) |
| | 88.2kHz rate support: 1 = yes, 0 = no. | | | |
| R7 | 6 | R | 1h | N/A (Hard-coded) |
| | 48kHz rate support: 1 = yes, 0 = no. | | | |
| R6 | 5 | R | 1h | N/A (Hard-coded) |
| | 44.1kHz rate support: 1 = yes, 0 = no. | | | |
| R5 | 4 | R | 0h | N/A (Hard-coded) |
| | 32kHz rate support: 1 = yes, 0 = no. | | | |
| R4 | 3 | R | 0h | N/A (Hard-coded) |
| | 22.05kHz rate support: 1 = yes, 0 = no. | | | |
| R3 | 2 | R | 0h | N/A (Hard-coded) |
| | 16kHz rate support: 1 = yes, 0 = no. | | | |


©2014 TEMPO SEMICONDCUTOR, INC..

| Field Name | Bits | R/W | Default | Reset |
|---|---|---|---|---|
| R2 | 1 | R | 0h | N/A (Hard-coded) |
| | 11.025kHz rate support: 1 = yes, 0 = no. | | | |
| R1 | 0 | R | 0h | N/A (Hard-coded) |
| | 8kHz rate support: 1 = yes, 0 = no. | | | |

### *7.4.4. AFG (NID = 01h): StreamCap*

| Reg | Byte 4 (Bits 31:24) | Byte 3 (Bits 23:16) | Byte 2 (Bits 15:8) | Byte 1 (Bits 7:0) |
|---|---|---|---|---|
| Set | | | | |
| Get | F000Bh | | | |

| Field Name | Bits | R/W | Default | Reset |
|---|---|---|---|---|
| Rsvd | 31:3 | R | 00000000h | N/A (Hard-coded) |
| | Reserved. | | | |
| AC3 | 2 | R | 0h | N/A (Hard-coded) |
| | AC-3 formatted data support: 1 = yes, 0 = no. | | | |
| Float32 | 1 | R | 0h | N/A (Hard-coded) |
| | Float32 formatted data support: 1 = yes, 0 = no. | | | |
| PCM | 0 | R | 1h | N/A (Hard-coded) |
| | PCM-formatted data support: 1 = yes, 0 = no. | | | |

### *7.4.5. AFG (NID = 01h): InAmpCap*

| Reg | Byte 4 (Bits 31:24) | Byte 3 (Bits 23:16) | Byte 2 (Bits 15:8) | Byte 1 (Bits 7:0) |
|---|---|---|---|---|
| Set | | | | |
| Get | F000Dh | | | |


©2014 TEMPO SEMICONDCUTOR, INC..

| Field Name | Bits | R/W | Default | Reset |
|---|---|---|---|---|
| Mute | 31 | R | 0h | N/A (Hard-coded) |
| | Mute support: 1 = yes, 0 = no. | | | |
| Rsvd3 | 30:23 | R | 00h | N/A (Hard-coded) |
| | Reserved. | | | |
| StepSize | 22:16 | R | 27h | N/A (Hard-coded) |
| | Size of each step in the gain range: 0 to 127 = .25dB to 32dB, in .25dB steps. | | | |
| Rsvd2 | 15 | R | 0h | N/A (Hard-coded) |
| | Reserved. | | | |
| NumSteps | 14:8 | R | 03h | N/A (Hard-coded) |
| | Number of gains steps (number of possible settings - 1). | | | |
| Rsvd1 | 7 | R | 0h | N/A (Hard-coded) |
| | Reserved. | | | |
| Offset | 6:0 | R | 00h | N/A (Hard-coded) |
| | Indicates which step is 0dB | | | |

### *7.4.6. AFG (NID = 01h): PwrStateCap*

| Reg | Byte 4 (Bits 31:24) | Byte 3 (Bits 23:16) | Byte 2 (Bits 15:8) | Byte 1 (Bits 7:0) |
|---|---|---|---|---|
| Set | | | | |
| Get | F000Fh | | | |

| Field Name | Bits | R/W | Default | Reset |
|---|---|---|---|---|
| EPSS | 31 | R | 1h | N/A (Hard-coded) |
| | Extended power states support: 1 = yes, 0 = no. | | | |
| ClkStop | 30 | R | 1h | N/A (Hard-coded) |
| | D3 clock stop support: 1 = yes, 0 = no. | | | |


©2014 TEMPO SEMICONDCUTOR, INC..

| Field Name | Bits | R/W | Default | Reset |
|---|---|---|---|---|
| LPD3Sup | 29 | R | 1h | N/A (Hard-coded) |
| | Codec state intended during system S3 state: 0 = D3Hot, 1 = D3Cold | | | |
| Rsvd | 28:5 | R | 000000h | N/A (Hard-coded) |
| | Reserved. | | | |
| D3ColdSup | 4 | R | 1h | N/A (Hard-coded) |
| | D3Cold power state support: 1 = yes, 0 = no. | | | |
| D3Sup | 3 | R | 1h | N/A (Hard-coded) |
| | D3 power state support: 1 = yes, 0 = no. | | | |
| D2Sup | 2 | R | 1h | N/A (Hard-coded) |
| | D2 power state support: 1 = yes, 0 = no. | | | |
| D1Sup | 1 | R | 1h | N/A (Hard-coded) |
| | D1 power state support: 1 = yes, 0 = no. | | | |
| D0Sup | 0 | R | 1h | N/A (Hard-coded) |
| | D0 power state support: 1 = yes, 0 = no. | | | |

### *7.4.7. AFG (NID = 01h): GPIOCnt*

| Reg | Byte 4 (Bits 31:24) | Byte 3 (Bits 23:16) | Byte 2 (Bits 15:8) | Byte 1 (Bits 7:0) |
|---|---|---|---|---|
| Set | | | | |
| Get | F0011h | | | |

| Field Name | Bits | R/W | Default | Reset |
|---|---|---|---|---|
| GPIWake | 31 | R | 1h | N/A (Hard-coded) |
| | Wake capability. Assuming the Wake Enable Mask controls are enabled, GPIO's configured as inputs can cause a wake (generate a Status Change event on the link) when there is a change in level on the pin. | | | |
| GPIUnsol | 30 | R | 1h | N/A (Hard-coded) |
| | GPIO unsolicited response support: 1 = yes, 0 = no. | | | |
| Rsvd | 29:24 | R | 00h | N/A (Hard-coded) |
| | Reserved. | | | |


©2014 TEMPO SEMICONDCUTOR, INC..

| Field Name | Bits | R/W | Default | Reset |
|---|---|---|---|---|
| NumGPIs | 23:16 | R | 00h | N/A (Hard-coded) |
| | Number of GPI pins supported by function group. | | | |
| NumGPOs | 15:8 | R | 00h | N/A (Hard-coded) |
| | Number of GPO pins supported by function group. | | | |
| NumGPIOs | 7:0 | R | 48QFN=07h<br>40QFN=03h | N/A (Hard-coded) |
| | Number of GPIO pins supported by function group. Note different default by package options. | | | |

### *7.4.8. AFG (NID = 01h): OutAmpCap*

| Reg | Byte 4 (Bits 31:24) | Byte 3 (Bits 23:16) | Byte 2 (Bits 15:8) | Byte 1 (Bits 7:0) |
|---|---|---|---|---|
| Set | | | | |
| Get | F0012h | | | |

| Field Name | Bits | R/W | Default | Reset |
|---|---|---|---|---|
| Mute | 31 | R | 1h | N/A (Hard-coded) |
| | Mute support: 1 = yes, 0 = no. | | | |
| Rsvd3 | 30:23 | R | 00h | N/A (Hard-coded) |
| | Reserved. | | | |
| StepSize | 22:16 | R | 02h | N/A (Hard-coded) |
| | Size of each step in the gain range: 0 to 127 = .25dB to 32dB, in .25dB steps. | | | |
| Rsvd2 | 15 | R | 0h | N/A (Hard-coded) |
| | Reserved. | | | |
| NumSteps | 14:8 | R | 7Fh | N/A (Hard-coded) |
| | Number of gains steps (number of possible settings - 1). | | | |
| Rsvd1 | 7 | R | 0h | N/A (Hard-coded) |
| | Reserved. | | | |


©2014 TEMPO SEMICONDCUTOR, INC..

| Field Name | Bits | R/W | Default | Reset |
|---|---|---|---|---|
| Offset | 6:0 | R | 7Fh | N/A (Hard-coded) |
| | Indicates which step is 0dB | | | |

### *7.4.9. AFG (NID = 01h): PwrState*

| Reg | Byte 4 (Bits 31:24) | Byte 3 (Bits 23:16) | Byte 2 (Bits 15:8) | Byte 1 (Bits 7:0) |
|---|---|---|---|---|
| Set | | | | 705h |
| Get | F0500h | | | |

| Field Name | Bits | R/W | Default | Reset |
|---|---|---|---|---|
| Rsvd3 | 31:11 | R | 000000h | N/A (Hard-coded) |
| | Reserved. | | | |
| SettingsReset | 10 | R | 1h | POR - DAFG - ULR |
| | Indicates if any persistent settings in this Function Group have been reset. Cleared by PwrState 'Get' to this Widget. | | | |
| ClkStopOK | 9 | R | 1h | POR - DAFG - ULR |
| | Bit clock can currently be removed: 1 = yes, 0 = no. | | | |
| Error | 8 | R | 0h | POR - DAFG - ULR |
| | Error indicator: 1 = cannot enter requested power state, 0 = no problem with requested power state. | | | |
| Rsvd2 | 7 | R | 0h | N/A (Hard-coded) |
| | Reserved. | | | |
| Act | 6:4 | R | 3h | POR - DAFG - LR |
| | Actual power state of this widget. | | | |
| Rsvd1 | 3 | R | 0h | N/A (Hard-coded) |
| | Reserved. | | | |
| Set | 2:0 | RW | 3h | POR - DAFG - LR |
| | Current power state setting for this widget. | | | |


©2014 TEMPO SEMICONDCUTOR, INC..

### 7.4.10. AFG (NID = 01h): UnsolResp

| Reg | Byte 4 (Bits 31:24) | Byte 3 (Bits 23:16) | Byte 2 (Bits 15:8) | Byte 1 (Bits 7:0) |
|---|---|---|---|---|
| Set | | | | 708h |
| Get | F0800h | | | |

| Field Name | Bits | R/W | Default | Reset |
|---|---|---|---|---|
| Rsvd2 | 31:8 | R | 000000h | N/A (Hard-coded) |
| | Reserved. | | | |
| En | 7 | RW | 0h | POR - DAFG - ULR |
| | Unsolicited response enable: 1 = enabled, 0 = disabled. | | | |
| Rsvd1 | 6 | R | 0h | N/A (Hard-coded) |
| | Reserved. | | | |
| Tag | 5:0 | RW | 00h | POR - DAFG - ULR |
| | Software programmable field returned in top six bits (31:26) of every Unsolicited Response generated by this node. | | | |

### 7.4.11. AFG (NID = 01h): GPIO

| Reg | Byte 4 (Bits 31:24) | Byte 3 (Bits 23:16) | Byte 2 (Bits 15:8) | Byte 1 (Bits 7:0) |
|---|---|---|---|---|
| Set | | | | 715h |
| Get | F1500h | | | |

**Please note that the 40QFN package version only supports GPIO0, GPIO1 and GPIO2.**

| Field Name | Bits | R/W | Default | Reset |
|---|---|---|---|---|
| Rsvd | 31:7 | R | 00000000h | N/A (Hard-coded) |
| | Reserved. | | | |
| Data6 | 6 | RW | 0h | POR-DAFG-ULR |
| | Data for GPIO6. If this GPIO bit is configured as Sticky (edge-sensitive) imput, it can be cleared by writing “0”. For details of read back value, refer to HD Audio spec. section 7.3.3.22. | | | |


©2014 TEMPO SEMICONDCUTOR, INC..

| Field Name | Bits | R/W | Default | Reset |
|---|---|---|---|---|
| Data5 | 5 | RW | 0h | POR-DAFG-ULR |
| | Data for GPIO5. If this GPIO bit is configured as Sticky (edge-sensitive) imput, it can be cleared by writing “0”. For details of read back value, refer to HD Audio spec. section 7.3.3.22. | | | |
| Data4 | 4 | RW | 0h | POR-DAFG-ULR |
| | Data for GPIO4. If this GPIO bit is configured as Sticky (edge-sensitive) imput, it can be cleared by writing “0”. For details of read back value, refer to HD Audio spec. section 7.3.3.22. | | | |
| Data3 | 3 | RW | 0h | POR-DAFG-ULR |
| | Data for GPIO3. If this GPIO bit is configured as Sticky (edge-sensitive) imput, it can be cleared by writing “0”. For details of read back value, refer to HD Audio spec. section 7.3.3.22. | | | |
| Data2 | 2 | RW | 0h | POR - DAFG - ULR |
| | Data for GPIO2. If this GPIO bit is configured as Sticky (edge-sensitive) input, it can be cleared by writing "0". For details of read back value, refer to HD Audio spec. section 7.3.3.22. | | | |
| Data1 | 1 | RW | 0h | POR - DAFG - ULR |
| | Data for GPIO1. If this GPIO bit is configured as Sticky (edge-sensitive) input, it can be cleared by writing "0". For details of read back value, refer to HD Audio spec. section 7.3.3.22. | | | |
| Data0 | 0 | RW | 0h | POR - DAFG - ULR |
| | Data for GPIO0. If this GPIO bit is configured as Sticky (edge-sensitive) input, it can be cleared by writing "0". For details of read back value, refer to HD Audio spec. section 7.3.3.22. | | | |

### *7.4.12. AFG (NID = 01h): GPIOEn*

| Reg | Byte 4 (Bits 31:24) | Byte 3 (Bits 23:16) | Byte 2 (Bits 15:8) | Byte 1 (Bits 7:0) |
|---|---|---|---|---|
| Set | | | | 716h |
| Get | F1600h | | | |

**Please note that the 40QFN package version only supports GPIO0, GPIO1 and GPIO2.**


©2014 TEMPO SEMICONDCUTOR, INC..

| Field Name | Bits | R/W | Default | Reset |
|---|---|---|---|---|
| Rsvd | 31:7 | R | 00000000h | N/A (Hard-coded) |
| | Reserved. | | | |
| Mask6 | 6 | RW | 0h | POR - DAFG - ULR |
| | Enable for GPIO6: 0 = pin is disabled (Hi-Z state); 1 = pin is enabled; behavior determined by GPIO Direction control. | | | |
| Mask5 | 5 | RW | 0h | POR - DAFG - ULR |
| | Enable for GPIO5: 0 = pin is disabled (Hi-Z state); 1 = pin is enabled; behavior determined by GPIO Direction control. | | | |
| Mask4 | 4 | RW | 0h | POR - DAFG - ULR |
| | Enable for GPIO4: 0 = pin is disabled (Hi-Z state); 1 = pin is enabled; behavior determined by GPIO Direction control. | | | |
| Mask3 | 3 | RW | 0h | POR - DAFG - ULR |
| | Enable for GPIO3: 0 = pin is disabled (Hi-Z state); 1 = pin is enabled; behavior determined by GPIO Direction control. | | | |
| Mask2 | 2 | RW | 0h | POR - DAFG - ULR |
| | Enable for GPIO2: 0 = pin is disabled (Hi-Z state); 1 = pin is enabled; behavior determined by GPIO Direction control. | | | |
| Mask1 | 1 | RW | 0h | POR - DAFG - ULR |
| | Enable for GPIO1: 0 = pin is disabled (Hi-Z state); 1 = pin is enabled; behavior determined by GPIO Direction control. | | | |
| Mask0 | 0 | RW | 0h | POR - DAFG - ULR |
| | Enable for GPIO0: 0 = pin is disabled (Hi-Z state); 1 = pin is enabled; behavior determined by GPIO Direction control. | | | |

### *7.4.13. AFG (NID = 01h): GPIODir*

| Reg | Byte 4 (Bits 31:24) | Byte 3 (Bits 23:16) | Byte 2 (Bits 15:8) | Byte 1 (Bits 7:0) |
|---|---|---|---|---|
| Set | | | | 717h |
| Get | F1700h | | | |

**Please note that the 40QFN package version only supports GPIO0, GPIO1 and GPIO2.**


©2014 TEMPO SEMICONDCUTOR, INC..

| Field Name | Bits | R/W | Default | Reset |
|---|---|---|---|---|
| Rsvd | 31:7 | R | 00000000h | N/A (Hard-coded) |
| | Reserved. | | | |
| Control6 | 6 | RW | 0h | POR - DAFG - ULR |
| | Direction control for GPIO6: 0 = GPIO is configured as input; 1 = GPIO is configured as output. | | | |
| Control5 | 5 | RW | 0h | POR - DAFG - ULR |
| | Direction control for GPIO5: 0 = GPIO is configured as input; 1 = GPIO is configured as output. | | | |
| Control4 | 4 | RW | 0h | POR - DAFG - ULR |
| | Direction control for GPIO4: 0 = GPIO is configured as input; 1 = GPIO is configured as output. | | | |
| Control3 | 3 | RW | 0h | POR - DAFG - ULR |
| | Direction control for GPIO3: 0 = GPIO is configured as input; 1 = GPIO is configured as output. | | | |
| Control2 | 2 | RW | 0h | POR - DAFG - ULR |
| | Direction control for GPIO2: 0 = GPIO is configured as input; 1 = GPIO is configured as output. | | | |
| Control1 | 1 | RW | 0h | POR - DAFG - ULR |
| | Direction control for GPIO1: 0 = GPIO is configured as input; 1 = GPIO is configured as output. | | | |
| Control0 | 0 | RW | 0h | POR - DAFG - ULR |
| | Direction control for GPIO0: 0 = GPIO is configured as input; 1 = GPIO is configured as output. | | | |

### *7.4.14. AFG (NID = 01h): GPIOWakeEn*

| Reg | Byte 4 (Bits 31:24) | Byte 3 (Bits 23:16) | Byte 2 (Bits 15:8) | Byte 1 (Bits 7:0) |
|---|---|---|---|---|
| Set | | | | 718h |
| Get | F1800h | | | |

**Please note that the 40QFN package version only supports GPIO0, GPIO1 and GPIO2.**


©2014 TEMPO SEMICONDCUTOR, INC..

| Field Name | Bits | R/W | Default | Reset |
|---|---|---|---|---|
| Rsvd | 31:7 | R | 00000000h | N/A (Hard-coded) |
| | Reserved. | | | |
| W6 | 6 | RW | 0h | POR - DAFG - ULR |
| | Wake enable for GPIO6: 0 = wake-up event is disabled; 1 = When HD Audio link is powered down (RST# is asserted), a wake-up event will trigger a Status Change Request event on the link. | | | |
| W5 | 5 | RW | 0h | POR - DAFG - ULR |
| | Wake enable for GPIO5: 0 = wake-up event is disabled; 1 = When HD Audio link is powered down (RST# is asserted), a wake-up event will trigger a Status Change Request event on the link. | | | |
| W4 | 4 | RW | 0h | POR - DAFG - ULR |
| | Wake enable for GPIO4: 0 = wake-up event is disabled; 1 = When HD Audio link is powered down (RST# is asserted), a wake-up event will trigger a Status Change Request event on the link. | | | |
| W3 | 3 | RW | 0h | POR - DAFG - ULR |
| | Wake enable for GPIO3: 0 = wake-up event is disabled; 1 = When HD Audio link is powered down (RST# is asserted), a wake-up event will trigger a Status Change Request event on the link. | | | |
| W2 | 2 | RW | 0h | POR - DAFG - ULR |
| | Wake enable for GPIO2: 0 = wake-up event is disabled; 1 = When HD Audio link is powered down (RST# is asserted), a wake-up event will trigger a Status Change Request event on the link. | | | |
| W1 | 1 | RW | 0h | POR - DAFG - ULR |
| | Wake enable for GPIO1: 0 = wake-up event is disabled; 1 = When HD Audio link is powered down (RST# is asserted), a wake-up event will trigger a Status Change Request event on the link. | | | |
| W0 | 0 | RW | 0h | POR - DAFG - ULR |
| | Wake enable for GPIO0: 0 = wake-up event is disabled; 1 = When HD Audio link is powered down (RST# is asserted), a wake-up event will trigger a Status Change Request event on the link. | | | |


©2014 TEMPO SEMICONDCUTOR, INC..

### *7.4.15. AFG (NID = 01h): GPIOUnsol*

| Reg | Byte 4 (Bits 31:24) | Byte 3 (Bits 23:16) | Byte 2 (Bits 15:8) | Byte 1 (Bits 7:0) |
|---|---|---|---|---|
| Set | | | | 719h |
| Get | F1900h | | | |

**Please note that the 40QFN package version only supports GPIO0, GPIO1 and GPIO2.**

| Field Name | Bits | R/W | Default | Reset |
|---|---|---|---|---|
| Rsvd | 31:7 | R | 00000000h | N/A (Hard-coded) |
| | Reserved. | | | |
| EnMask6 | 6 | RW | 0h | POR - DAFG - ULR |
| | Unsolicited enable mask for GPIO6. If set, and the Unsolicited Response control for this widget has been enabled, an unsolicited response will be sent when GPIO2 is configured as input and changes state. | | | |
| EnMask5 | 5 | RW | 0h | POR - DAFG - ULR |
| | Unsolicited enable mask for GPIO5. If set, and the Unsolicited Response control for this widget has been enabled, an unsolicited response will be sent when GPIO2 is configured as input and changes state. | | | |
| EnMask4 | 4 | RW | 0h | POR - DAFG - ULR |
| | Unsolicited enable mask for GPIO4. If set, and the Unsolicited Response control for this widget has been enabled, an unsolicited response will be sent when GPIO2 is configured as input and changes state. | | | |
| EnMask3 | 3 | RW | 0h | POR - DAFG - ULR |
| | Unsolicited enable mask for GPIO3. If set, and the Unsolicited Response control for this widget has been enabled, an unsolicited response will be sent when GPIO2 is configured as input and changes state. | | | |
| EnMask2 | 2 | RW | 0h | POR - DAFG - ULR |
| | Unsolicited enable mask for GPIO2. If set, and the Unsolicited Response control for this widget has been enabled, an unsolicited response will be sent when GPIO2 is configured as input and changes state. | | | |
| EnMask1 | 1 | RW | 0h | POR - DAFG - ULR |
| | Unsolicited enable mask for GPIO1. If set, and the Unsolicited Response control for this widget has been enabled, an unsolicited response will be sent when GPIO1 is configured as input and changes state. | | | |


©2014 TEMPO SEMICONDCUTOR, INC..

| Field Name | Bits | R/W | Default | Reset |
|---|---|---|---|---|
| EnMask0 | 0 | RW | 0h | POR - DAFG - ULR |
| | Unsolicited enable mask for GPIO0. If set, and the Unsolicited Response control for this widget has been enabled, an unsolicited response will be sent when GPIO0 is configured as input and changes state. | | | |

### *7.4.16. AFG (NID = 01h): GPIOSticky*

| Reg | Byte 4 (Bits 31:24) | Byte 3 (Bits 23:16) | Byte 2 (Bits 15:8) | Byte 1 (Bits 7:0) |
|---|---|---|---|---|
| Set | | | | 71Ah |
| Get | F1A00h | | | |

**Please note that the 40QFN package version only supports GPIO0, GPIO1 and GPIO2.**

| Field Name | Bits | R/W | Default | Reset |
|---|---|---|---|---|
| Rsvd | 31:7 | R | 00000000h | N/A (Hard-coded) |
| | Reserved. | | | |
| Mask6 | 6 | RW | 0h | POR - DAFG - ULR |
| | GPIO6 input type (when configured as input): 0 = Non-Sticky (level-sensitive); 1 = Sticky (edge-sensitive). | | | |
| Mask5 | 5 | RW | 0h | POR - DAFG - ULR |
| | GPIO5input type (when configured as input): 0 = Non-Sticky (level-sensitive); 1 = Sticky (edge-sensitive). | | | |
| Mask4 | 4 | RW | 0h | POR - DAFG - ULR |
| | GPIO4 input type (when configured as input): 0 = Non-Sticky (level-sensitive); 1 = Sticky (edge-sensitive). | | | |
| Mask3 | 3 | RW | 0h | POR - DAFG - ULR |
| | GPIO3 input type (when configured as input): 0 = Non-Sticky (level-sensitive); 1 = Sticky (edge-sensitive). | | | |
| Mask2 | 2 | RW | 0h | POR - DAFG - ULR |
| | GPIO2 input type (when configured as input): 0 = Non-Sticky (level-sensitive); 1 = Sticky (edge-sensitive). | | | |


©2014 TEMPO SEMICONDCUTOR, INC..

| Field Name | Bits | R/W | Default | Reset |
|---|---|---|---|---|
| Mask1 | 1 | RW | 0h | POR - DAFG - ULR |
| | GPIO1 input type (when configured as input): 0 = Non-Sticky (level-sensitive); 1 = Sticky (edge-sensitive). | | | |
| Mask0 | 0 | RW | 0h | POR - DAFG - ULR |
| | GPIO0 input type (when configured as input): 0 = Non-Sticky (level-sensitive); 1 = Sticky (edge-sensitive). | | | |

### *7.4.17. AFG (NID = 01h): SubID*

| Reg | Byte 4 (Bits 31:24) | Byte 3 (Bits 23:16) | Byte 2 (Bits 15:8) | Byte 1 (Bits 7:0) |
|---|---|---|---|---|
| Set | 723h | 722h | 721h | 720h |
| Get | F2300h / F2200h / F2100h / F2000h | | | |

| Field Name | Bits | R/W | Default | Reset |
|---|---|---|---|---|
| Subsys3 | 31:24 | RW | 00h | POR |
| | Subsystem ID (byte 3) | | | |
| Subsys2 | 23:16 | RW | 00h | POR |
| | Subsystem ID (byte 2) | | | |
| Subsys1 | 15:8 | RW | 01h | POR |
| | Subsystem ID (byte 1) | | | |
| Assembly | 7:0 | RW | 00h | POR |
| | Assembly ID (Not applicable to codec vendors). | | | |

### *7.4.18. AFG (NID = 01h): GPIOPIrty*

| Reg | Byte 4 (Bits 31:24) | Byte 3 (Bits 23:16) | Byte 2 (Bits 15:8) | Byte 1 (Bits 7:0) |
|---|---|---|---|---|
| Set | | | | 770h |
| Get | F7000h | | | |

**Please note that the 40QFN package version only supports GPIO0, GPIO1 and GPIO2**


©2014 TEMPO SEMICONDCUTOR, INC..

| Field Name | Bits | R/W | Default | Reset |
|---|---|---|---|---|
| Rsvd | 31:7 | R | 00000000h | N/A (Hard-coded) |
| | Reserved. | | | |
| GP6 | 6 | RW | 1h | POR - DAFG - ULR |
| | GPIO6 Polarity:<br>If configured as output or non-sticky input:<br>0 = inverting<br>1 = non-inverting<br><br>If configured as sticky input:<br>0 = falling edges will be detected<br>1 = rising edges will be detected | | | |
| GP5 | 5 | RW | 1h | POR - DAFG - ULR |
| | GPIO5 Polarity:<br>If configured as output or non-sticky input:<br>0 = inverting<br>1 = non-inverting<br><br>If configured as sticky input:<br>0 = falling edges will be detected<br>1 = rising edges will be detected | | | |
| GP4 | 4 | RW | 1h | POR - DAFG - ULR |
| | GPIO4 Polarity:<br>If configured as output or non-sticky input:<br>0 = inverting<br>1 = non-inverting<br><br>If configured as sticky input:<br>0 = falling edges will be detected<br>1 = rising edges will be detected | | | |
| GP3 | 3 | RW | 1h | POR - DAFG - ULR |
| | GPIO3 Polarity:<br>If configured as output or non-sticky input:<br>0 = inverting<br>1 = non-inverting<br><br>If configured as sticky input:<br>0 = falling edges will be detected<br>1 = rising edges will be detected | | | |


©2014 TEMPO SEMICONDCUTOR, INC..

| Field Name | Bits | R/W | Default | Reset |
|---|---|---|---|---|
| GP2 | 2 | RW | 1h | POR - DAFG - ULR |
| | GPIO2 Polarity:<br>If configured as output or non-sticky input:<br>0 = inverting<br>1 = non-inverting<br><br>If configured as sticky input:<br>0 = falling edges will be detected<br>1 = rising edges will be detected | | | |
| GP1 | 1 | RW | 1h | POR - DAFG - ULR |
| | GPIO1 Polarity:<br>If configured as output or non-sticky input:<br>0 = inverting<br>1 = non-inverting<br><br>If configured as sticky input:<br>0 = falling edges will be detected<br>1 = rising edges will be detected | | | |
| GP0 | 0 | RW | 1h | POR - DAFG - ULR |
| | GPIO0 Polarity:<br>If configured as output or non-sticky input:<br>0 = inverting<br>1 = non-inverting<br><br>If configured as sticky input:<br>0 = falling edges will be detected<br>1 = rising edges will be detected | | | |

### *7.4.19. AFG (NID = 01h): GPIODrive*

| Reg | Byte 4 (Bits 31:24) | Byte 3 (Bits 23:16) | Byte 2 (Bits 15:8) | Byte 1 (Bits 7:0) |
|---|---|---|---|---|
| Set | | | | 771h |
| Get | F7100h | | | |

**Please note that the 40QFN package version only supports GPIO0, GPIO1 and GPIO2**


©2014 TEMPO SEMICONDCUTOR, INC..

| Field Name | Bits | R/W | Default | Reset |
|---|---|---|---|---|
| Rsvd | 31:7 | R | 00000000h | N/A (Hard-coded) |
| | Reserved. | | | |
| OD6 | 6 | RW | 0h | POR - DAFG - ULR |
| | GPIO6 Drive Mode: 0 = push-pull (drive 0 and 1); 1 = open drain (drive 0, float for 1). | | | |
| OD5 | 5 | RW | 0h | POR - DAFG - ULR |
| | GPIO5 Drive Mode: 0 = push-pull (drive 0 and 1); 1 = open drain (drive 0, float for 1). | | | |
| OD4 | 4 | RW | 0h | POR - DAFG - ULR |
| | GPIO4 Drive Mode: 0 = push-pull (drive 0 and 1); 1 = open drain (drive 0, float for 1). | | | |
| OD3 | 3 | RW | 0h | POR - DAFG - ULR |
| | GPIO3 Drive Mode: 0 = push-pull (drive 0 and 1); 1 = open drain (drive 0, float for 1). | | | |
| OD2 | 2 | RW | 0h | POR - DAFG - ULR |
| | GPIO2 Drive Mode: 0 = push-pull (drive 0 and 1); 1 = open drain (drive 0, float for 1). | | | |
| OD1 | 1 | RW | 0h | POR - DAFG - ULR |
| | GPIO1 Drive Mode: 0 = push-pull (drive 0 and 1); 1 = open drain (drive 0, float for 1). | | | |
| OD0 | 0 | RW | 0h | POR - DAFG - ULR |
| | GPIO0 Drive Mode: 0 = push-pull (drive 0 and 1); 1 = open-drain (drive 0, float for 1). | | | |

### *7.4.20. AFG (NID = 01h): DMic*

| Reg | Byte 4 (Bits 31:24) | Byte 3 (Bits 23:16) | Byte 2 (Bits 15:8) | Byte 1 (Bits 7:0) |
|---|---|---|---|---|
| Set | | | | 778h |
| Get | F7800h | | | |


©2014 TEMPO SEMICONDCUTOR, INC..

| Field Name | Bits | R/W | Default | Reset |
|---|---|---|---|---|
| Rsvd | 31:6 | R | 0000000h | N/A (Hard-coded) |
| | Reserved. | | | |
| Mono1 | 5 | RW | 0h | POR |
| | DMic1 mono select: 0 = stereo operation, 1 = mono operation (left channel duplicated to the right channel). | | | |
| Mono0 | 4 | RW | 0h | POR |
| | DMic0 mono select: 0 = stereo operation, 1 = mono operation (left channel duplicated to the right channel). | | | |
| PhAdj | 3:2 | RW | 0h | POR |
| | Selects what phase of the DMic clock the data should be latched:<br>0h = left data rising edge/right data falling edge<br>1h = left data center of high/right data center of low<br>2h = left data falling edge/right data rising edge<br>3h = left data center of low/right data center of high | | | |
| Rate | 1:0 | RW | 2h | POR |
| | Selects the DMic clock rate:<br>0h = 4.704MHz<br>1h = 3.528MHz<br>2h = 2.352MHz<br>3h = 1.176MHz. | | | |

### *7.4.21. AFG (NID = 01h): DACMode*

| Reg | Byte 4 (Bits 31:24) | Byte 3 (Bits 23:16) | Byte 2 (Bits 15:8) | Byte 1 (Bits 7:0) |
|---|---|---|---|---|
| Set | | | | 780h |
| Get | F8000h | | | |

| Field Name | Bits | R/W | Default | Reset |
|---|---|---|---|---|
| Rsvd | 31:9 | R | 000000h | N/A (Hard-coded) |
| | Reserved. | | | |


©2014 TEMPO SEMICONDCUTOR, INC..

| Field Name | Bits | R/W | Default | Reset |
|---|---|---|---|---|
| Atten3dB | 8 | RW | 1h | POR - S&DAFG - LR |
| | Attenuate DAC path signal by 3dB | | | |
| SDMSettleDisable | 7 | RW | 0h | POR - S&DAFG - LR |
| | SDM wait-to-settle disable:<br>1 = at mute, the SDM switches to the mute pattern immediately<br>0 = at mute, the SDM switches to the mute pattern after settling (can take up to ~45ms) | | | |
| SDMCoeffSel | 6 | RW | 0h | POR - S&DAFG - LR |
| | DAC SDM coefficient select (stages 1, 2, 3):<br>1 = 1/16, 1/2, 1/4<br>0 = 1/16, 1/4, 1/2 | | | |
| SDMLFHalf | 5 | RW | 0h | POR - S&DAFG - LR |
| | DAC SDM local feedback coefficient select: 1 = 1/4096, 0 = 1/2048. | | | |
| SDMLFDisable | 4 | RW | 0h | POR - S&DAFG - LR |
| | DAC SDM local feedback disable: 1 = local feedback disabled, 0 = local feedback enabled. | | | |
| InvertValid | 3 | RW | 0h | POR - S&DAFG - LR |
| | DAC Valid Invert: 1 = 7.056MHz valid strobe is inverted, 0 = 7.056MHz valid strobe is not inverted. | | | |
| InvertData | 2 | RW | 0h | POR - S&DAFG - LR |
| | DAC Data Invert: 1 = 1-bit outputs are inverted, 0 = 1-bit outputs are not inverted. | | | |
| Atten6dBDisable | 1 | RW | 1h | POR - S&DAFG - LR |
| | Disable built-in -6dB digital attenuation: 1 = -6dB disabled, 0 = -6dB enabled. | | | |
| Fade | 0 | RW | 1h | POR - S&DAFG - LR |
| | DAC Gain Fade Enable:<br>1 = gain will be slowly faded from old value to new value (~10ms)<br>0 = gain will jump immediately to new value. | | | |


©2014 TEMPO SEMICONDCUTOR, INC..

### *7.4.22. AFG (NID = 01h): ADCMode*

| Reg | Byte 4 (Bits 31:24) | Byte 3 (Bits 23:16) | Byte 2 (Bits 15:8) | Byte 1 (Bits 7:0) |
|---|---|---|---|---|
| Set | | | | 784h |
| Get | F8400h | | | |

| Field Name | Bits | R/W | Default | Reset |
|---|---|---|---|---|
| Rsvd2 | 31:4 | R | 0000000h | N/A (Hard-coded) |
| | Reserved. | | | |
| InvertValid | 3 | RW | 0h | POR - S&DAFG - LR |
| | ADC Valid Invert: 1 = 14.112MHz valid strobe is inverted, 0 = 14.112MHz valid strobe is not inverted. | | | |
| InvertData | 2 | RW | 0h | POR - S&DAFG - LR |
| | ADC Data Invert: 1 = 1-bit inputs are inverted, 0 = 1-bit inputs are not inverted. | | | |
| Rsvd1 | 1:0 | R | 0h | N/A (Hard-coded) |
| | Reserved. | | | |

### *7.4.23. AFG (NID = 01h): EAPD*

| Reg | Byte 4 (Bits 31:24) | Byte 3 (Bits 23:16) | Byte 2 (Bits 15:8) | Byte 1 (Bits 7:0) |
|---|---|---|---|---|
| Set | | | | 788h |
| Get | F8800h | | | |

| Field Name | Bits | R/W | Default | Reset |
|---|---|---|---|---|
| Rsvd3 | 31:15 | R | 00000h | N/A (Hard-coded) |
| | Reserved. | | | |
| HPBSDInv | 14 | RW | 0h | POR |
| | HP Amp Shutdown Invert:<br>0 = Amp will power down (or mute) when EAPD pin is low<br>1 = Amp will power down (or mute) when EAPD pin is high | | | |


©2014 TEMPO SEMICONDCUTOR, INC..

| Field Name | Bits | R/W | Default | Reset |
|---|---|---|---|---|
| HPBSDMode | 13 | RW | 0h | POR |
| | HP Amp Shutdown Mode:<br>0 = Amp will mute when disabled<br>1 = Amp will enter a low power state when disabled | | | |
| HPBSD | 12 | RW | 0h | POR |
| | HP Amp Shutdown Control Select:<br>0 = Amp controlled by EAPD pin only<br>1 = Amp controlled by power state only | | | |
| Rsvd2 | 11 | R | 0h | N/A (Hard-coded) |
| | Reserved. | | | |
| HPASDInv | 10 | RW | 0h | POR |
| | HP Amp Shutdown Invert:<br>0 = Amp will power down (or mute) when EAPD pin is low<br>1 = Amp will power down (or mute) when EAPD pin is high | | | |
| HPASDMode | 9 | RW | 0h | POR |
| | HP Amp Shutdown Mode:<br>0 = Amp will mute when disabled<br>1 = Amp will enter a low power state when disabled | | | |
| HPASD | 8 | RW | 0h | POR |
| | HP Amp Shutdown Control Select:<br>0 = Amp controlled by EAPD pin only<br>1 = Amp controlled by power state only | | | |
| Rsvd1 | 7:2 | R | 0h | N/A (Hard-coded) |
| | Reserved. | | | |
| PinMode | 1:0 | RW | 0h | POR |
| | EAPD Pin Mode:<br>00b = Open Drain I/O (Value at pin is wired-AND of EAPD bit and external signal)<br>01b = CMOS Output (Value of EAPD bit is forced at pin)<br>1xb = CMOS Input (External signal controls internal amps, EAPD bit ignored) | | | |


©2014 TEMPO SEMICONDCUTOR, INC..

### *7.4.24. AFG (NID = 01h): PortUse*

| Reg | Byte 4 (Bits 31:24) | Byte 3 (Bits 23:16) | Byte 2 (Bits 15:8) | Byte 1 (Bits 7:0) |
|---|---|---|---|---|
| Set | | | | 7C0h |
| Get | FC000h | | | |

| Field Name | Bits | R/W | Default | Reset |
|---|---|---|---|---|
| Rsvd | 31:8 | R | 0000000h | N/A (Hard-coded) |
| | Reserved. | | | |
| PortH | 7 | RW | 0h | POR |
| | Port H usage: 0 = connected as an output, 1 = either not connected or connected as an input. | | | |
| PortG | 6 | RW | 0h | POR |
| | Port G usage: 0 = connected as an output, 1 = either not connected or connected as an input. | | | |
| PortF | 5 | RW | 0h | POR |
| | Port F usage: 0 = connected as an output, 1 = either not connected or connected as an input. | | | |
| PortE | 4 | RW | 0h | POR |
| | Port E usage: 0 = connected as an output, 1 = either not connected or connected as an input. | | | |
| PortD | 3 | RW | 0h | POR |
| | Port D usage: 0 = connected as an output, 1 = either not connected or connected as an input. | | | |
| PortC | 2 | RW | 0h | POR |
| | Port C usage: 0 = connected as an output, 1 = either not connected or connected as an input. | | | |
| PortB | 1 | RW | 0h | POR |
| | Port B usage: 0 = connected as an output, 1 = either not connected or connected as an input. | | | |


©2014 TEMPO SEMICONDCUTOR, INC..

| Field Name | Bits | R/W | Default | Reset |
|---|---|---|---|---|
| PortA | 0 | RW | 0h | POR |
| | Port A usage: 0 = connected as an output, 1 = either not connected or connected as an input. | | | |

### *7.4.25. AFG (NID = 01h): VSPwrState*

| Reg | Byte 4 (Bits 31:24) | Byte 3 (Bits 23:16) | Byte 2 (Bits 15:8) | Byte 1 (Bits 7:0) |
|---|---|---|---|---|
| Set | | | | 7D8h |
| Get | FD800h | | | |

| Field Name | Bits | R/W | Default | Reset |
|---|---|---|---|---|
| Rsvd | 31:2 | R | 00000000h | N/A (Hard-coded) |
| | Reserved. | | | |
| D5 | 1 | RW | 0h | POR - ELR |
| | Vendor specific D5 power state, only entered once the part is already in D3cold (this bit must be set before the command to enter D3cold). If set, this bit overrides the D4 bit (bit 0). Includes the power savings of D4, but additionally powers down GPIO pins, the VAG amp, and the HP amps. Exits this power state via POR or rising edge of Link Reset. | | | |
| D4 | 0 | RW | 0h | POR - ELR |
| | Vendor specific D4 power state, only entered once the part is already in D3cold (this bit must be set before the command to enter D3cold). If the D5 bit (bit 1) is set, this bit is overridden. Includes the power savings of D3cold, but additionally powers down the HDA interface (no responses). Exit this power state via POR or rising edge of Link Reset. | | | |

### *7.4.26. AFG (NID = 01h): AnaPort*

| Reg | Byte 4 (Bits 31:24) | Byte 3 (Bits 23:16) | Byte 2 (Bits 15:8) | Byte 1 (Bits 7:0) |
|---|---|---|---|---|
| Set | | | 7EDh | 7ECh |
| Get | FEC00h | | | |


©2014 TEMPO SEMICONDCUTOR, INC..

| Field Name | Bits | R/W | Default | Reset |
|---|---|---|---|---|
| Rsvd | 31:8 | R | 0000000h | N/A (Hard-coded) |
| | Reserved. | | | |
| HPwd | 7 | RW | 0h | POR - S&DAFG - ULR |
| | Power down Port H. | | | |
| GPwd | 6 | RW | 0h | POR - S&DAFG - ULR |
| | Power down Port G. | | | |
| FPwd | 5 | RW | 0h | POR - S&DAFG - ULR |
| | Power down Port F. | | | |
| EPwd | 4 | RW | 0h | POR - S&DAFG - ULR |
| | Power down Port E. | | | |
| DPwd | 3 | RW | 0h | POR - S&DAFG - ULR |
| | Power down Port D. | | | |
| CPwd | 2 | RW | 0h | POR - S&DAFG - ULR |
| | Power down Port C. | | | |
| BPwd | 1 | RW | 0h | POR - S&DAFG - ULR |
| | Power down Port B. | | | |
| APwd | 0 | RW | 0h | POR - S&DAFG - ULR |
| | Power down Port A. | | | |

### *7.4.27. AFG (NID = 01h): AnaBeep*

| Reg | Byte 4 (Bits 31:24) | Byte 3 (Bits 23:16) | Byte 2 (Bits 15:8) | Byte 1 (Bits 7:0) |
|---|---|---|---|---|
| Set | | | | 7EEh |
| Get | FEE00h | | | |

| Field Name | Bits | R/W | Default | Reset |
|---|---|---|---|---|
| Rsvd2 | 31:7 | R | 0000000h | N/A (Hard-coded) |
| | Reserved. | | | |


©2014 TEMPO SEMICONDCUTOR, INC..

| Field Name | Bits | R/W | Default | Reset |
|---|---|---|---|---|
| BeepDetect | 6 | R | 0h | POR - DAFG - ULR |
| | 0: no beep present; 1: beep present | | | |
| Gain | 5:4 | RW | 3h | POR |
| | Analog PC Beep Gain: 0h = -24dB, 1h = -18dB, 2h = -12dB, 3h = -6dB. | | | |
| CntSel | 3:2 | RW | 0h | POR |
| | Select counter delay.0h=64ms,1h = 128ms, 2h = 256ms, 3h = 512ms | | | |
| Mode | 1:0 | RW | 2h | POR |
| | Analog PC Beep Mode:<br>00b = Always disabled<br>01b = Always enabled<br>1xb = Enabled during HDA Link Reset only | | | |

### *7.4.28. AFG (NID = 01h): Reset*

| Reg | Byte 4 (Bits 31:24) | Byte 3 (Bits 23:16) | Byte 2 (Bits 15:8) | Byte 1 (Bits 7:0) |
|---|---|---|---|---|
| Set | | | | 7FFh |
| Get | FFF00h | | | |

| Field Name | Bits | R/W | Default | Reset |
|---|---|---|---|---|
| Rsvd1 | 31:8 | R | 000000h | N/A (Hard-coded) |
| | Reserved. | | | |
| Execute | 7:0 | W | 00h | N/A (Hard-coded) |
| | Function Reset. Function Group reset is executed when the Set verb 7FF is written with 8-bit payload of 00h. The codec should issue a response to ac-knowledge receipt of the verb, and then reset the affected Function Group and all associated widgets to their power-on reset values. Some controls such as Configuration Default controls should not be reset. Overlaps Response. | | | |


©2014 TEMPO SEMICONDCUTOR, INC..

## 7.5. PortA (NID = 0Ah): WCap

| Reg | Byte 4 (Bits 31:24) | Byte 3 (Bits 23:16) | Byte 2 (Bits 15:8) | Byte 1 (Bits 7:0) |
|---|---|---|---|---|
| Set | | | | |
| Get | F0009h | | | |

| Field Name | Bits | R/W | Default | Reset |
|---|---|---|---|---|
| Rsvd2 | 31:24 | R | 00h | N/A (Hard-coded) |
| | Reserved. | | | |
| Type | 23:20 | R | 4h | N/A (Hard-coded) |
| | Widget type:<br>0h = Out Converter<br>1h = In Converter<br>2h = Summing (Mixer)<br>3h = Selector (Mux)<br>4h = Pin Complex<br>5h = Power<br>6h = Volume Knob<br>7h = Beep Generator<br>8h-Eh = Reserved<br>Fh = Vendor Defined | | | |
| Delay | 19:16 | R | 0h | N/A (Hard-coded) |
| | Number of sample delays through widget. | | | |
| Rsvd1 | 15:12 | R | 0h | N/A (Hard-coded) |
| | Reserved. | | | |
| SwapCap | 11 | R | 0h | N/A (Hard-coded) |
| | Left/right swap support: 1 = yes, 0 = no. | | | |
| PwrCntrl | 10 | R | 1h | N/A (Hard-coded) |
| | Power state support: 1 = yes, 0 = no. | | | |
| Dig | 9 | R | 0h | N/A (Hard-coded) |
| | Digital stream support: 1 = yes (digital), 0 = no (analog). | | | |


©2014 TEMPO SEMICONDCUTOR, INC..

| Field Name | Bits | R/W | Default | Reset |
|---|---|---|---|---|
| ConnList | 8 | R | 1h | N/A (Hard-coded) |
| | Connection list present: 1 = yes, 0 = no. | | | |
| UnSolCap | 7 | R | 1h | N/A (Hard-coded) |
| | Unsolicited response support: 1 = yes, 0 = no. | | | |
| ProcWidget | 6 | R | 0h | N/A (Hard-coded) |
| | Processing state support: 1 = yes, 0 = no. | | | |
| Stripe | 5 | R | 0h | N/A (Hard-coded) |
| | Striping support: 1 = yes, 0 = no. | | | |
| FormatOvrd | 4 | R | 0h | N/A (Hard-coded) |
| | Stream format override: 1 = yes, 0 = no. | | | |
| AmpParOvrd | 3 | R | 0h | N/A (Hard-coded) |
| | Amplifier capabilities override: 1 = yes, no. | | | |
| OutAmpPrsnt | 2 | R | 0h | N/A (Hard-coded) |
| | Output amp present: 1 = yes, 0 = no. | | | |
| InAmpPrsnt | 1 | R | 1h | N/A (Hard-coded) |
| | Input amp present: 1 = yes, 0 = no. | | | |
| Stereo | 0 | R | 1h | N/A (Hard-coded) |
| | Stereo stream support: 1 = yes (stereo), 0 = no (mono). | | | |

### *7.5.1. PortA (NID = 0Ah): PinCap*

| Reg | Byte 4 (Bits 31:24) | Byte 3 (Bits 23:16) | Byte 2 (Bits 15:8) | Byte 1 (Bits 7:0) |
|---|---|---|---|---|
| Set | | | | |
| Get | F000Ch | | | |


©2014 TEMPO SEMICONDCUTOR, INC..

| Field Name | Bits | R/W | Default | Reset |
|---|---|---|---|---|
| Rsvd2 | 31:17 | R | 0000h | N/A (Hard-coded) |
| | Reserved. | | | |
| EapdCap | 16 | R | 1h | N/A (Hard-coded) |
| | EAPD support: 1 = yes, 0 = no. | | | |
| VrefCntrl | 15:8 | R | 17h | N/A (Hard-coded) |
| | Vref support:<br>bit 7 = Reserved<br>bit 6 = Reserved<br>bit 5 = 100% support (1 = yes, 0 = no)<br>bit 4 = 80% support (1 = yes, 0 = no)<br>bit 3 = Reserved<br>bit 2 = GND support (1 = yes, 0 = no)<br>bit 1 = 50% support (1 = yes, 0 = no)<br>bit 0 = Hi-Z support (1 = yes, 0 = no) | | | |
| Rsvd1 | 7 | R | 0h | N/A (Hard-coded) |
| | Reserved. | | | |
| BalancedIO | 6 | R | 0h | N/A (Hard-coded) |
| | Balanced I/O support: 1 = yes, 0 = no. | | | |
| InCap | 5 | R | 1h | N/A (Hard-coded) |
| | Input support: 1 = yes, 0 = no. | | | |
| OutCap | 4 | R | 1h | N/A (Hard-coded) |
| | Output support: 1 = yes, 0 = no. | | | |
| HdphDrvCap | 3 | R | 1h | N/A (Hard-coded) |
| | Headphone amp present: 1 = yes, 0 = no. | | | |
| PresDtctCap | 2 | R | 1h | N/A (Hard-coded) |
| | Presence detection support: 1 = yes, 0 = no. | | | |
| TrigRqd | 1 | R | 0h | N/A (Hard-coded) |
| | Trigger required for impedance sense: 1 = yes, 0 = no. | | | |


©2014 TEMPO SEMICONDCUTOR, INC..

| Field Name | Bits | R/W | Default | Reset |
|---|---|---|---|---|
| ImpSenseCap | 0 | R | 0h | N/A (Hard-coded) |
| | Impedance sense support: 1 = yes, 0 = no. | | | |

### 7.5.2. PortA (NID = 0Ah): ConLst

| Reg | Byte 4 (Bits 31:24) | Byte 3 (Bits 23:16) | Byte 2 (Bits 15:8) | Byte 1 (Bits 7:0) |
|---|---|---|---|---|
| Set | | | | |
| Get | F000Eh | | | |

| Field Name | Bits | R/W | Default | Reset |
|---|---|---|---|---|
| Rsvd | 31:8 | R | 000000h | N/A (Hard-coded) |
| | Reserved. | | | |
| LForm | 7 | R | 0h | N/A (Hard-coded) |
| | Connection list format: 1 = long-form (15-bit) NID entries, 0 = short-form (7-bit) NID entries. | | | |
| ConL | 6:0 | R | 04h | N/A (Hard-coded) |
| | Number of NID entries in connection list. | | | |

### 7.5.3. PortA (NID = 0Ah): ConLstEntry0

| Reg | Byte 4 (Bits 31:24) | Byte 3 (Bits 23:16) | Byte 2 (Bits 15:8) | Byte 1 (Bits 7:0) |
|---|---|---|---|---|
| Set | | | | |
| Get | F0200h | | | |

| Field Name | Bits | R/W | Default | Reset |
|---|---|---|---|---|
| ConL3 | 31:24 | R | 19h | N/A (Hard-coded) |
| | DAC4 Converter widget (0x19) | | | |


©2014 TEMPO SEMICONDCUTOR, INC..

| Field Name | Bits | R/W | Default | Reset |
|---|---|---|---|---|
| ConL2 | 23:16 | R | 1Eh | N/A (Hard-coded) |
| | MixerOutVol Selector widget (0x1E) | | | |
| ConL1Range | 15 | R | 1h | N/A (Hard-coded) |
| | 1 = ConL0..ConL1 defines a range of selectable inputs. | | | |
| ConL1 | 14:8 | R | 18h | N/A (Hard-coded) |
| | DAC3 Converter widget (0x18) | | | |
| ConL0 | 7:0 | R | 15h | N/A (Hard-coded) |
| | DAC0 Converter widget (0x15) | | | |

### *7.5.4. PortA (NID = 0Ah): InAmpLeft*

| Reg | Byte 4 (Bits 31:24) | Byte 3 (Bits 23:16) | Byte 2 (Bits 15:8) | Byte 1 (Bits 7:0) |
|---|---|---|---|---|
| Set | | | | 360h |
| Get | B2000h | | | |

| Field Name | Bits | R/W | Default | Reset |
|---|---|---|---|---|
| Rsvd1 | 31:2 | R | 00000000h | N/A (Hard-coded) |
| | Reserved. | | | |
| Gain | 1:0 | R | 0h | POR - DAFG - ULR |
| | Amp gain step number (see InAmpCap parameter pertaining to this widget). | | | |

### *7.5.5. PortA (NID = 0Ah): InAmpRight*

| Reg | Byte 4 (Bits 31:24) | Byte 3 (Bits 23:16) | Byte 2 (Bits 15:8) | Byte 1 (Bits 7:0) |
|---|---|---|---|---|
| Set | | | | 350h |
| Get | B0000h | | | |


©2014 TEMPO SEMICONDCUTOR, INC..

| Field Name | Bits | R/W | Default | Reset |
|---|---|---|---|---|
| Rsvd1 | 31:2 | R | 00000000h | N/A (Hard-coded) |
| | Reserved. | | | |
| Gain | 1:0 | R | 0h | POR - DAFG - ULR |
| | Amp gain step number (see InAmpCap parameter pertaining to this widget). | | | |

### *7.5.6. PortA (NID = 0Ah): ConSelectCtrl*

| Reg | Byte 4 (Bits 31:24) | Byte 3 (Bits 23:16) | Byte 2 (Bits 15:8) | Byte 1 (Bits 7:0) |
|---|---|---|---|---|
| Set | | | | 701h |
| Get | F0100h | | | |

| Field Name | Bits | R/W | Default | Reset |
|---|---|---|---|---|
| Rsvd | 31:3 | R | 00000000h | N/A (Hard-coded) |
| | Reserved. | | | |
| Index | 2:0 | RW | 0h | POR - DAFG - ULR |
| | Connection select control index. | | | |

### *7.5.7. PortA (NID = 0Ah): PwrState*

| Reg | Byte 4 (Bits 31:24) | Byte 3 (Bits 23:16) | Byte 2 (Bits 15:8) | Byte 1 (Bits 7:0) |
|---|---|---|---|---|
| Set | | | | 705h |
| Get | F0500h | | | |

| Field Name | Bits | R/W | Default | Reset |
|---|---|---|---|---|
| Rsvd4 | 31:11 | R | 000000h | N/A (Hard-coded) |
| | Reserved. | | | |


©2014 TEMPO SEMICONDCUTOR, INC..

| Field Name | Bits | R/W | Default | Reset |
|---|---|---|---|---|
| SettingsReset | 10 | R | 1h | POR - DAFG - ULR |
| | Indicates if any persistent settings in this Widget have been reset. Cleared by PwrState 'Get', or a 'Set' to any Verb in this Widget. | | | |
| Rsvd3 | 9 | R | 0h | N/A (Hard-coded) |
| | Reserved. | | | |
| Error | 8 | R | 0h | POR - DAFG - ULR |
| | Error indicator: 1 = cannot enter requested power state, 0 = no problem with requested power state. | | | |
| Rsvd2 | 7:6 | R | 0h | N/A (Hard-coded) |
| | Reserved. | | | |
| Act | 5:4 | R | 3h | POR - DAFG - LR |
| | Actual power state of this widget. | | | |
| Rsvd1 | 3:2 | R | 0h | N/A (Hard-coded) |
| | Reserved. | | | |
| Set | 1:0 | RW | 0h | POR - DAFG - LR |
| | Current power state setting for this widget. | | | |

### *7.5.8. PortA (NID = 0Ah): PinWCntrl*

| Reg | Byte 4 (Bits 31:24) | Byte 3 (Bits 23:16) | Byte 2 (Bits 15:8) | Byte 1 (Bits 7:0) |
|---|---|---|---|---|
| Set | | | | 707h |
| Get | F0700h | | | |

| Field Name | Bits | R/W | Default | Reset |
|---|---|---|---|---|
| Rsvd2 | 31:8 | R | 000000h | N/A (Hard-coded) |
| | Reserved. | | | |
| HPhnEn | 7 | RW | 0h | POR - DAFG - ULR |
| | Headphone amp enable: 1 = enabled, 0 = disabled. | | | |


©2014 TEMPO SEMICONDCUTOR, INC..

| Field Name | Bits | R/W | Default | Reset |
|---|---|---|---|---|
| OutEn | 6 | RW | 0h | POR - DAFG - ULR |
| | Output enable: 1 = enabled, 0 = disabled. | | | |
| InEn | 5 | R | 0h | POR - DAFG - ULR |
| | Input enable: 1 = enabled, 0 = disabled. | | | |
| Rsvd1 | 4:3 | R | 0h | N/A (Hard-coded) |
| | Reserved. | | | |
| VRefEn | 2:0 | R | 0h | POR - DAFG - ULR |
| | Vref selection (See VrefCntrl field of PinCap parameter for supported selections):<br>000b= HI-Z<br>001b= 50%<br>010b= GND<br>011b= Reserved<br>100b= 80%<br>101b= 100%<br>110b= Reserved<br>111b= Reserved | | | |

### *7.5.9. PortA (NID = 0Ah): UnsolResp*

| Reg | Byte 4 (Bits 31:24) | Byte 3 (Bits 23:16) | Byte 2 (Bits 15:8) | Byte 1 (Bits 7:0) |
|---|---|---|---|---|
| Set | | | | 708h |
| Get | F0800h | | | |

| Field Name | Bits | R/W | Default | Reset |
|---|---|---|---|---|
| Rsvd2 | 31:8 | R | 000000h | N/A (Hard-coded) |
| | Reserved. | | | |
| En | 7 | RW | 0h | POR - DAFG - ULR |
| | Unsolicited response enable (also enables Wake events for this Widget): 1 = enabled, 0 = disabled. | | | |
| Rsvd1 | 6 | R | 0h | N/A (Hard-coded) |
| | Reserved. | | | |


©2014 TEMPO SEMICONDCUTOR, INC..

| Field Name | Bits | R/W | Default | Reset |
|---|---|---|---|---|
| Tag | 5:0 | RW | 00h | POR - DAFG - ULR |
| | Software programmable field returned in top six bits (31:26) of every Unsolicited Response generated by this node. | | | |

### 7.5.10. PortA (NID = 0Ah): ChSense

| Reg | Byte 4 (Bits 31:24) | Byte 3 (Bits 23:16) | Byte 2 (Bits 15:8) | Byte 1 (Bits 7:0) |
|---|---|---|---|---|
| Set | | | | 709h |
| Get | F0900h | | | |

| Field Name | Bits | R/W | Default | Reset |
|---|---|---|---|---|
| PresDtct | 31 | R | 0h | POR |
| | Presence detection indicator: 1 = presence detected; 0 = presence not detected. | | | |
| Rsvd | 30:0 | R | 00000000h | N/A (Hard-coded) |
| | Reserved. | | | |

### 7.5.11. PortA (NID = 0Ah): EAPDBTLLR

| Reg | Byte 4 (Bits 31:24) | Byte 3 (Bits 23:16) | Byte 2 (Bits 15:8) | Byte 1 (Bits 7:0) |
|---|---|---|---|---|
| Set | | | | 70Ch |
| Get | F0C00h | | | |

| Field Name | Bits | R/W | Default | Reset |
|---|---|---|---|---|
| Rsvd2 | 31:2 | R | 00000000h | N/A (Hard-coded) |
| | Reserved. | | | |
| EAPD | 1 | RW | 1h | POR - DAFG - ULR |
| | EAPD control: 1 = set EAPD pin to 1 (powered) up if this pin is powered up, 0 = set EAPD pin to 0. | | | |


©2014 TEMPO SEMICONDCUTOR, INC..

| Field Name | Bits | R/W | Default | Reset |
|---|---|---|---|---|
| Rsvd1 | 0 | R | 0h | N/A (Hard-coded) |
| | Reserved. | | | |

### *7.5.12. PortA (NID = 0Ah): ConfigDefault*

| Reg | Byte 4 (Bits 31:24) | Byte 3 (Bits 23:16) | Byte 2 (Bits 15:8) | Byte 1 (Bits 7:0) |
|---|---|---|---|---|
| Set | 71Fh | 71Eh | 71Dh | 71Ch |
| Get | F1F00h / F1E00h / F1D00h / F1C00h | | | |

| Field Name | Bits | R/W | Default | Reset |
|---|---|---|---|---|
| PortConnectivity | 31:30 | RW | 0h | POR |
| | Port connectivity:<br>0h = Port complex is connected to a jack<br>1h = No physical connection for port<br>2h = Fixed function device is attached<br>3h = Both jack and internal device attached (info in all other fields refers to integrated device, any presence detection refers to jack) | | | |
| Location | 29:24 | RW | 02h | POR |
| | Location<br><br>Bits [5..4]:<br>0h = External on primary chassis<br>1h = Internal<br>2h = Separate chassis<br>3h = Other<br><br>Bits [3..0]:<br>0h = N/A<br>1h = Rear<br>2h = Front<br>3h = Left<br>4h = Right<br>5h = Top<br>6h = Bottom<br>7h-9h = Special<br>Ah-Fh = Reserved | | | |


©2014 TEMPO SEMICONDCUTOR, INC..

| Field Name | Bits | R/W | Default | Reset |
|---|---|---|---|---|
| Device | 23:20 | RW | 2h | POR |
| | Default device:<br>0h = Line out<br>1h = Speaker<br>2h = HP out<br>3h = CD<br>4h = SPDIF Out<br>5h = Digital other out<br>6h = Modem line side<br>7h = Modem handset side<br>8h = Line in<br>9h = Aux<br>Ah = Mic in<br>Bh = Telephony<br>Ch = SPDIF In<br>Dh = Digital other in<br>Eh = Reserved<br>Fh = Other | | | |
| ConnectionType | 19:16 | RW | 1h | POR |
| | Connection type:<br>0h = Unknown<br>1h = 1/8" stereo/mono<br>2h = 1/4" stereo/mono<br>3h = ATAPI internal<br>4h = RCA<br>5h = Optical<br>6h = Other digital<br>7h = Other analog<br>8h = Multichannel analog (DIN)<br>9h = XLR/Professional<br>Ah = RJ-11 (modem)<br>Bh = Combination<br>Ch-Eh = Reserved<br>Fh = Other | | | |


©2014 TEMPO SEMICONDCUTOR, INC..

| Field Name | Bits | R/W | Default | Reset |
|---|---|---|---|---|
| Color | 15:12 | RW | 4h | POR |
| | Color:<br>0h = Unknown<br>1h = Black<br>2h = Grey<br>3h = Blue<br>4h = Green<br>5h = Red<br>6h = Orange<br>7h = Yellow<br>8h = Purple<br>9h = Pink<br>Ah-Dh = Reserved<br>Eh = White<br>Fh = Other | | | |
| Misc | 11:8 | RW | 0h | POR |
| | Miscellaneous:<br>Bits [3..1] = Reserved<br>Bit 0 = Jack detect override | | | |
| Association | 7:4 | RW | 1h | POR |
| | Default assocation. | | | |
| Sequence | 3:0 | RW | 0h | POR |
| | Sequence. | | | |


©2014 TEMPO SEMICONDCUTOR, INC..

## 7.6. PortB (NID = 0Bh): WCap

| Reg | Byte 4 (Bits 31:24) | Byte 3 (Bits 23:16) | Byte 2 (Bits 15:8) | Byte 1 (Bits 7:0) |
|---|---|---|---|---|
| Set | | | | |
| Get | F0009h | | | |

| Field Name | Bits | R/W | Default | Reset |
|---|---|---|---|---|
| Rsvd2 | 31:24 | R | 00h | N/A (Hard-coded) |
| | Reserved. | | | |
| Type | 23:20 | R | 4h | N/A (Hard-coded) |
| | Widget type:<br>0h = Out Converter<br>1h = In Converter<br>2h = Summing (Mixer)<br>3h = Selector (Mux)<br>4h = Pin Complex<br>5h = Power<br>6h = Volume Knob<br>7h = Beep Generator<br>8h-Eh = Reserved<br>Fh = Vendor Defined | | | |
| Delay | 19:16 | R | 0h | N/A (Hard-coded) |
| | Number of sample delays through widget. | | | |
| Rsvd1 | 15:12 | R | 0h | N/A (Hard-coded) |
| | Reserved. | | | |
| SwapCap | 11 | R | 0h | N/A (Hard-coded) |
| | Left/right swap support: 1 = yes, 0 = no. | | | |
| PwrCntrl | 10 | R | 1h | N/A (Hard-coded) |
| | Power state support: 1 = yes, 0 = no. | | | |
| Dig | 9 | R | 0h | N/A (Hard-coded) |
| | Digital stream support: 1 = yes (digital), 0 = no (analog). | | | |
| ConnList | 8 | R | 1h | N/A (Hard-coded) |
| | Connection list present: 1 = yes, 0 = no. | | | |


©2014 TEMPO SEMICONDCUTOR, INC..

| Field Name | Bits | R/W | Default | Reset |
|---|---|---|---|---|
| UnSolCap | 7 | R | 1h | N/A (Hard-coded) |
| | Unsolicited response support: 1 = yes, 0 = no. | | | |
| ProcWidget | 6 | R | 0h | N/A (Hard-coded) |
| | Processing state support: 1 = yes, 0 = no. | | | |
| Stripe | 5 | R | 0h | N/A (Hard-coded) |
| | Striping support: 1 = yes, 0 = no. | | | |
| FormatOvrd | 4 | R | 0h | N/A (Hard-coded) |
| | Stream format override: 1 = yes, 0 = no. | | | |
| AmpParOvrd | 3 | R | 0h | N/A (Hard-coded) |
| | Amplifier capabilities override: 1 = yes, no. | | | |
| OutAmpPrsnt | 2 | R | 0h | N/A (Hard-coded) |
| | Output amp present: 1 = yes, 0 = no. | | | |
| InAmpPrsnt | 1 | R | 1h | N/A (Hard-coded) |
| | Input amp present: 1 = yes, 0 = no. | | | |
| Stereo | 0 | R | 1h | N/A (Hard-coded) |
| | Stereo stream support: 1 = yes (stereo), 0 = no (mono). | | | |

### *7.6.1. PortB (NID = 0Bh): PinCap*

| Reg | Byte 4 (Bits 31:24) | Byte 3 (Bits 23:16) | Byte 2 (Bits 15:8) | Byte 1 (Bits 7:0) |
|---|---|---|---|---|
| Set | | | | |
| Get | F000Ch | | | |

| Field Name | Bits | R/W | Default | Reset |
|---|---|---|---|---|
| Rsvd2 | 31:17 | R | 0000h | N/A (Hard-coded) |
| | Reserved. | | | |


©2014 TEMPO SEMICONDCUTOR, INC..

| Field Name | Bits | R/W | Default | Reset |
|---|---|---|---|---|
| EapdCap | 16 | R | 1h | N/A (Hard-coded) |
| | EAPD support: 1 = yes, 0 = no. | | | |
| VrefCntrl | 15:8 | R | 17h | N/A (Hard-coded) |
| | Vref support:<br>bit 7 = Reserved<br>bit 6 = Reserved<br>bit 5 = 100% support (1 = yes, 0 = no)<br>bit 4 = 80% support (1 = yes, 0 = no)<br>bit 3 = Reserved<br>bit 2 = GND support (1 = yes, 0 = no)<br>bit 1 = 50% support (1 = yes, 0 = no)<br>bit 0 = Hi-Z support (1 = yes, 0 = no) | | | |
| Rsvd1 | 7 | R | 0h | N/A (Hard-coded) |
| | Reserved. | | | |
| BalancedIO | 6 | R | 0h | N/A (Hard-coded) |
| | Balanced I/O support: 1 = yes, 0 = no. | | | |
| InCap | 5 | R | 1h | N/A (Hard-coded) |
| | Input support: 1 = yes, 0 = no. | | | |
| OutCap | 4 | R | 1h | N/A (Hard-coded) |
| | Output support: 1 = yes, 0 = no. | | | |
| HdphDrvCap | 3 | R | 1h | N/A (Hard-coded) |
| | Headphone amp present: 1 = yes, 0 = no. | | | |
| PresDtctCap | 2 | R | 1h | N/A (Hard-coded) |
| | Presence detection support: 1 = yes, 0 = no. | | | |
| TrigRqd | 1 | R | 0h | N/A (Hard-coded) |
| | Trigger required for impedance sense: 1 = yes, 0 = no. | | | |
| ImpSenseCap | 0 | R | 0h | N/A (Hard-coded) |
| | Impedance sense support: 1 = yes, 0 = no. | | | |


©2014 TEMPO SEMICONDCUTOR, INC..

### 7.6.2. PortB (NID = 0Bh): ConLst

| Reg | Byte 4 (Bits 31:24) | Byte 3 (Bits 23:16) | Byte 2 (Bits 15:8) | Byte 1 (Bits 7:0) |
|---|---|---|---|---|
| Set | | | | |
| Get | F000Eh | | | |

| Field Name | Bits | R/W | Default | Reset |
|---|---|---|---|---|
| Rsvd | 31:8 | R | 000000h | N/A (Hard-coded) |
| | Reserved. | | | |
| LForm | 7 | R | 0h | N/A (Hard-coded) |
| | Connection list format: 1 = long-form (15-bit) NID entries, 0 = short-form (7-bit) NID entries. | | | |
| ConL | 6:0 | R | 04h | N/A (Hard-coded) |
| | Number of NID entries in connection list. | | | |

### 7.6.3. PortB (NID = 0Bh): ConLstEntry0

| Reg | Byte 4 (Bits 31:24) | Byte 3 (Bits 23:16) | Byte 2 (Bits 15:8) | Byte 1 (Bits 7:0) |
|---|---|---|---|---|
| Set | | | | |
| Get | F0200h | | | |

| Field Name | Bits | R/W | Default | Reset |
|---|---|---|---|---|
| ConL3 | 31:24 | R | 19h | N/A (Hard-coded) |
| | DAC4 Converter widget (0x19) | | | |
| ConL2 | 23:16 | R | 1Eh | N/A (Hard-coded) |
| | MixerOutVol Selector widget (0x1E) | | | |
| ConL1Range | 14:8 | R | 1h | N/A (Hard-coded) |
| | 1 = ConL0..ConL1 defines a range of selectable inputs. | | | |


©2014 TEMPO SEMICONDCUTOR, INC..

| Field Name | Bits | R/W | Default | Reset |
|---|---|---|---|---|
| ConL1 | 15:8 | R | 18h | N/A (Hard-coded) |
| | DAC3 Converter widget (0x18) | | | |
| ConL0 | 7:0 | R | 15h | N/A (Hard-coded) |
| | DAC0 Converter widget (0x15) | | | |

### *7.6.4. PortB (NID = 0Bh): ConSelectCtrl*

| Reg | Byte 4 (Bits 31:24) | Byte 3 (Bits 23:16) | Byte 2 (Bits 15:8) | Byte 1 (Bits 7:0) |
|---|---|---|---|---|
| Set | | | | 701h |
| Get | F0100h | | | |

| Field Name | Bits | R/W | Default | Reset |
|---|---|---|---|---|
| Rsvd | 31:2 | R | 00000000h | N/A (Hard-coded) |
| | Reserved. | | | |
| Index | 1:0 | RW | 0h | POR - DAFG - ULR |
| | Connection select control index. | | | |

### *7.6.5. PortB (NID = 0Bh): InAmpLeft*

| Reg | Byte 4 (Bits 31:24) | Byte 3 (Bits 23:16) | Byte 2 (Bits 15:8) | Byte 1 (Bits 7:0) |
|---|---|---|---|---|
| Set | | | | 360h |
| Get | B2000h | | | |

| Field Name | Bits | R/W | Default | Reset |
|---|---|---|---|---|
| Rsvd1 | 31:2 | R | 00000000h | N/A (Hard-coded) |
| | Reserved. | | | |


©2014 TEMPO SEMICONDCUTOR, INC..

| Field Name | Bits | R/W | Default | Reset |
|---|---|---|---|---|
| Gain | 1:0 | RW | 0h | POR - DAFG - ULR |
| | Amp gain step number (see InAmpCap parameter pertaining to this widget). | | | |

### 7.6.6. PortB (NID = 0Bh): InAmpRight

| Reg | Byte 4 (Bits 31:24) | Byte 3 (Bits 23:16) | Byte 2 (Bits 15:8) | Byte 1 (Bits 7:0) |
|---|---|---|---|---|
| Set | | | | 350h |
| Get | B0000h | | | |

| Field Name | Bits | R/W | Default | Reset |
|---|---|---|---|---|
| Rsvd1 | 31:2 | R | 00000000h | N/A (Hard-coded) |
| | Reserved. | | | |
| Gain | 1:0 | RW | 0h | POR - DAFG - ULR |
| | Amp gain step number (see InAmpCap parameter pertaining to this widget). | | | |

### 7.6.7. PortB (NID = 0Bh): PwrState

| Reg | Byte 4 (Bits 31:24) | Byte 3 (Bits 23:16) | Byte 2 (Bits 15:8) | Byte 1 (Bits 7:0) |
|---|---|---|---|---|
| Set | | | | 705h |
| Get | F0500h | | | |

| Field Name | Bits | R/W | Default | Reset |
|---|---|---|---|---|
| Rsvd4 | 31:11 | R | 000000h | N/A (Hard-coded) |
| | Reserved. | | | |
| SettingsReset | 10 | R | 1h | POR - DAFG - ULR |
| | Indicates if any persistent settings in this Widget have been reset. Cleared by PwrState 'Get', or a 'Set' to any Verb in this Widget. | | | |


©2014 TEMPO SEMICONDCUTOR, INC..

| Field Name | Bits | R/W | Default | Reset |
|---|---|---|---|---|
| Rsvd3 | 9 | R | 0h | N/A (Hard-coded) |
| | Reserved. | | | |
| Error | 8 | R | 0h | POR - DAFG - ULR |
| | Error indicator: 1 = cannot enter requested power state, 0 = no problem with requested power state. | | | |
| Rsvd2 | 7:6 | R | 0h | N/A (Hard-coded) |
| | Reserved. | | | |
| Act | 5:4 | R | 3h | POR - DAFG - LR |
| | Actual power state of this widget. | | | |
| Rsvd1 | 3:2 | R | 0h | N/A (Hard-coded) |
| | Reserved. | | | |
| Set | 1:0 | RW | 0h | POR - DAFG - LR |
| | Current power state setting for this widget. | | | |

### *7.6.8. PortB (NID = 0Bh): PinWCntrl*

| Reg | Byte 4 (Bits 31:24) | Byte 3 (Bits 23:16) | Byte 2 (Bits 15:8) | Byte 1 (Bits 7:0) |
|---|---|---|---|---|
| Set | | | | 707h |
| Get | F0700h | | | |

| Field Name | Bits | R/W | Default | Reset |
|---|---|---|---|---|
| Rsvd2 | 31:8 | R | 000000h | N/A (Hard-coded) |
| | Reserved. | | | |
| HPhnEn | 7 | RW | 0h | POR - DAFG - ULR |
| | Headphone amp enable: 1 = enabled, 0 = disabled. | | | |
| OutEn | 6 | RW | 0h | POR - DAFG - ULR |
| | Output enable: 1 = enabled, 0 = disabled. | | | |


©2014 TEMPO SEMICONDCUTOR, INC..

| Field Name | Bits | R/W | Default | Reset |
|---|---|---|---|---|
| InEn | 5 | RW | 0h | POR - DAFG - ULR |
| | Output enable: 1 = enabled, 0 = disabled. | | | |
| Rsvd1 | 4:3 | RW | 00h | N/A (Hard-coded) |
| | Reserved. | | | |
| VRefEn | 2:0 | RW | 0h | POR - DAFG - ULR |
| | Vref selection (See VrefCntrl field of PinCap parameter for supported selections):<br>000b= HI-Z<br>001b= 50%<br>010b= GND<br>011b= Reserved<br>100b= 80%<br>101b= 100%<br>110b= Reserved<br>111b= Reserved | | | |

### *7.6.9. PortB (NID = 0Bh): UnsolResp*

| Reg | Byte 4 (Bits 31:24) | Byte 3 (Bits 23:16) | Byte 2 (Bits 15:8) | Byte 1 (Bits 7:0) |
|---|---|---|---|---|
| Set | | | | 708h |
| Get | F0800h | | | |

| Field Name | Bits | R/W | Default | Reset |
|---|---|---|---|---|
| Rsvd2 | 31:8 | R | 000000h | N/A (Hard-coded) |
| | Reserved. | | | |
| En | 7 | RW | 0h | POR - DAFG - ULR |
| | Unsolicited response enable (also enables Wake events for this Widget): 1 = enabled, 0 = disabled. | | | |
| Rsvd1 | 6 | R | 0h | N/A (Hard-coded) |
| | Reserved. | | | |


©2014 TEMPO SEMICONDCUTOR, INC..

| Field Name | Bits | R/W | Default | Reset |
|---|---|---|---|---|
| Tag | 5:0 | RW | 00h | POR - DAFG - ULR |
| | Software programmable field returned in top six bits (31:26) of every Unsolicited Response generated by this node. | | | |

### 7.6.10. PortB (NID = 0Bh): ChSense

| Reg | Byte 4 (Bits 31:24) | Byte 3 (Bits 23:16) | Byte 2 (Bits 15:8) | Byte 1 (Bits 7:0) |
|---|---|---|---|---|
| Set | | | | 709h |
| Get | F0900h | | | |

| Field Name | Bits | R/W | Default | Reset |
|---|---|---|---|---|
| PresDtct | 31 | R | 0h | POR |
| | Presence detection indicator: 1 = presence detected; 0 = presence not detected. | | | |
| Rsvd | 30:0 | R | 00000000h | N/A (Hard-coded) |
| | Reserved. | | | |

### 7.6.11. PortB (NID = 0Bh): EAPDBTLLR

| Reg | Byte 4 (Bits 31:24) | Byte 3 (Bits 23:16) | Byte 2 (Bits 15:8) | Byte 1 (Bits 7:0) |
|---|---|---|---|---|
| Set | | | | 70Ch |
| Get | F0C00h | | | |

| Field Name | Bits | R/W | Default | Reset |
|---|---|---|---|---|
| Rsvd2 | 31:2 | R | 00000000h | N/A (Hard-coded) |
| | Reserved. | | | |
| EAPD | 1 | RW | 1h | POR - DAFG - ULR |
| | EAPD control: 1 = set EAPD pin to 1 (powered) up if this pin is powered up, 0 = set EAPD pin to 0. | | | |


©2014 TEMPO SEMICONDCUTOR, INC..

| Field Name | Bits | R/W | Default | Reset |
|---|---|---|---|---|
| Rsvd1 | 0 | R | 0h | N/A (Hard-coded) |
| | Reserved. | | | |

### *7.6.12. PortB (NID = 0Bh): ConfigDefault*

| Reg | Byte 4 (Bits 31:24) | Byte 3 (Bits 23:16) | Byte 2 (Bits 15:8) | Byte 1 (Bits 7:0) |
|---|---|---|---|---|
| Set | 71Fh | 71Eh | 71Dh | 71Ch |
| Get | F1F00h / F1E00h / F1D00h / F1C00h | | | |

| Field Name | Bits | R/W | Default | Reset |
|---|---|---|---|---|
| PortConnectivity | 31:30 | RW | 0h | POR |
| | Port connectivity:<br>0h = Port complex is connected to a jack<br>1h = No physical connection for port<br>2h = Fixed function device is attached<br>3h = Both jack and internal device attached (info in all other fields refers to integrated device, any presence detection refers to jack) | | | |
| Location | 29:24 | RW | 02h | POR |
| | Location<br><br>Bits [5..4]:<br>0h = External on primary chassis<br>1h = Internal<br>2h = Separate chassis<br>3h = Other<br><br>Bits [3..0]:<br>0h = N/A<br>1h = Rear<br>2h = Front<br>3h = Left<br>4h = Right<br>5h = Top<br>6h = Bottom<br>7h-9h = Special<br>Ah-Fh = Reserved | | | |


©2014 TEMPO SEMICONDCUTOR, INC..

| Field Name | Bits | R/W | Default | Reset |
|---|---|---|---|---|
| Device | 23:20 | RW | Ah | POR |
| | Default device:<br>0h = Line out<br>1h = Speaker<br>2h = HP out<br>3h = CD<br>4h = SPDIF Out<br>5h = Digital other out<br>6h = Modem line side<br>7h = Modem handset side<br>8h = Line in<br>9h = Aux<br>Ah = Mic in<br>Bh = Telephony<br>Ch = SPDIF In<br>Dh = Digital other in<br>Eh = Reserved<br>Fh = Other | | | |
| ConnectionType | 19:16 | RW | 1h | POR |
| | Connection type:<br>0h = Unknown<br>1h = 1/8" stereo/mono<br>2h = 1/4" stereo/mono<br>3h = ATAPI internal<br>4h = RCA<br>5h = Optical<br>6h = Other digital<br>7h = Other analog<br>8h = Multichannel analog (DIN)<br>9h = XLR/Professional<br>Ah = RJ-11 (modem)<br>Bh = Combination<br>Ch-Eh = Reserved<br>Fh = Other | | | |


©2014 TEMPO SEMICONDCUTOR, INC..

| Field Name | Bits | R/W | Default | Reset |
|---|---|---|---|---|
| Color | 15:12 | RW | 9h | POR |
| | Color:<br>0h = Unknown<br>1h = Black<br>2h = Grey<br>3h = Blue<br>4h = Green<br>5h = Red<br>6h = Orange<br>7h = Yellow<br>8h = Purple<br>9h = Pink<br>Ah-Dh = Reserved<br>Eh = White<br>Fh = Other | | | |
| Misc | 11:8 | RW | 0h | POR |
| | Miscellaneous:<br>Bits [3..1] = Reserved<br>Bit 0 = Jack detect override | | | |
| Association | 7:4 | RW | 2h | POR |
| | Default assocation. | | | |
| Sequence | 3:0 | RW | 0h | POR |
| | Sequence. | | | |


©2014 TEMPO SEMICONDCUTOR, INC..

## 7.7. PortC (NID = 0Ch): WCap

| Field Name | Bits | R/W | Default | Reset |
|---|---|---|---|---|
| Rsvd2 | 31:24 | R | 00h | N/A (Hard-coded) |
| | Reserved. | | | |
| Type | 23:20 | R | 4h | N/A (Hard-coded) |
| | Widget type:<br>0h = Out Converter<br>1h = In Converter<br>2h = Summing (Mixer)<br>3h = Selector (Mux)<br>4h = Pin Complex<br>5h = Power<br>6h = Volume Knob<br>7h = Beep Generator<br>8h-Eh = Reserved<br>Fh = Vendor Defined | | | |
| Delay | 19:16 | R | 0h | N/A (Hard-coded) |
| | Number of sample delays through widget. | | | |
| Rsvd1 | 15:12 | R | 0h | N/A (Hard-coded) |
| | Reserved. | | | |
| SwapCap | 11 | R | 0h | N/A (Hard-coded) |
| | Left/right swap support: 1 = yes, 0 = no. | | | |
| PwrCntrl | 10 | R | 1h | N/A (Hard-coded) |
| | Power state support: 1 = yes, 0 = no. | | | |
| Dig | 9 | R | 0h | N/A (Hard-coded) |
| | Digital stream support: 1 = yes (digital), 0 = no (analog). | | | |
| ConnList | 8 | R | 1h | N/A (Hard-coded) |
| | Connection list present: 1 = yes, 0 = no. | | | |
| UnSolCap | 7 | R | 1h | N/A (Hard-coded) |
| | Unsolicited response support: 1 = yes, 0 = no. | | | |
| ProcWidget | 6 | R | 0h | N/A (Hard-coded) |
| | Processing state support: 1 = yes, 0 = no. | | | |


©2014 TEMPO SEMICONDCUTOR, INC..

## 7.7. PortC (NID = 0Ch): WCap

| Field Name | Bits | R/W | Default | Reset |
|---|---|---|---|---|
| Stripe | 5 | R | 0h | N/A (Hard-coded) |
| | Striping support: 1 = yes, 0 = no. | | | |
| FormatOvrd | 4 | R | 0h | N/A (Hard-coded) |
| | Stream format override: 1 = yes, 0 = no. | | | |
| AmpParOvrd | 3 | R | 0h | N/A (Hard-coded) |
| | Amplifier capabilities override: 1 = yes, no. | | | |
| OutAmpPrsnt | 2 | R | 0h | N/A (Hard-coded) |
| | Output amp present: 1 = yes, 0 = no. | | | |
| InAmpPrsnt | 1 | R | 1h | N/A (Hard-coded) |
| | Input amp present: 1 = yes, 0 = no. | | | |
| Stereo | 0 | R | 1h | N/A (Hard-coded) |
| | Stereo stream support: 1 = yes (stereo), 0 = no (mono). | | | |

### *7.7.1. PortC (NID = 0Ch): PinCap*

| Reg | Byte 4 (Bits 31:24) | Byte 3 (Bits 23:16) | Byte 2 (Bits 15:8) | Byte 1 (Bits 7:0) |
|---|---|---|---|---|
| Set | | | | |
| Get | F000Ch | | | |

| Field Name | Bits | R/W | Default | Reset |
|---|---|---|---|---|
| Rsvd2 | 31:17 | R | 0000h | N/A (Hard-coded) |
| | Reserved. | | | |
| EapdCap | 16 | R | 1h | N/A (Hard-coded) |
| | EAPD support: 1 = yes, 0 = no. | | | |


©2014 TEMPO SEMICONDCUTOR, INC..

| Field Name | Bits | R/W | Default | Reset |
|---|---|---|---|---|
| VrefCntrl | 15:8 | R | 00h | N/A (Hard-coded) |
| | Vref support:<br>bit 7 = Reserved<br>bit 6 = Reserved<br>bit 5 = 100% support (1 = yes, 0 = no)<br>bit 4 = 80% support (1 = yes, 0 = no)<br>bit 3 = Reserved<br>bit 2 = GND support (1 = yes, 0 = no)<br>bit 1 = 50% support (1 = yes, 0 = no)<br>bit 0 = Hi-Z support (1 = yes, 0 = no) | | | |
| Rsvd1 | 7 | R | 0h | N/A (Hard-coded) |
| | Reserved. | | | |
| BalancedIO | 6 | R | 0h | N/A (Hard-coded) |
| | Balanced I/O support: 1 = yes, 0 = no. | | | |
| InCap | 5 | R | 1h | N/A (Hard-coded) |
| | Input support: 1 = yes, 0 = no. | | | |
| OutCap | 4 | R | 1h | N/A (Hard-coded) |
| | Output support: 1 = yes, 0 = no. | | | |
| HdphDrvCap | 3 | R | 0h | N/A (Hard-coded) |
| | Headphone amp present: 1 = yes, 0 = no. | | | |
| PresDtctCap | 2 | R | 1h | N/A (Hard-coded) |
| | Presence detection support: 1 = yes, 0 = no. | | | |
| TrigRqd | 1 | R | 0h | N/A (Hard-coded) |
| | Trigger required for impedance sense: 1 = yes, 0 = no. | | | |
| ImpSenseCap | 0 | R | 0h | N/A (Hard-coded) |
| | Impedance sense support: 1 = yes, 0 = no. | | | |

### *7.7.2. PortC (NID = 0Ch): ConLst*

| Reg | Byte 4 (Bits 31:24) | Byte 3 (Bits 23:16) | Byte 2 (Bits 15:8) | Byte 1 (Bits 7:0) |
|---|---|---|---|---|
| Set | | | | |


©2014 TEMPO SEMICONDCUTOR, INC..

### *7.7.2. PortC (NID = 0Ch): ConLst*

| Reg | Byte 4 (Bits 31:24) | Byte 3 (Bits 23:16) | Byte 2 (Bits 15:8) | Byte 1 (Bits 7:0) |
|---|---|---|---|---|
| Get | F000Eh | | | |

| Field Name | Bits | R/W | Default | Reset |
|---|---|---|---|---|
| Rsvd | 31:8 | R | 000000h | N/A (Hard-coded) |
| | Reserved. | | | |
| LForm | 7 | R | 0h | N/A (Hard-coded) |
| | Connection list format: 1 = long-form (15-bit) NID entries, 0 = short-form (7-bit) NID entries. | | | |
| ConL | 6:0 | R | 04h | N/A (Hard-coded) |
| | Number of NID entries in connection list. | | | |

### *7.7.3. PortC (NID = 0Ch): ConLstEntry0*

| Reg | Byte 4 (Bits 31:24) | Byte 3 (Bits 23:16) | Byte 2 (Bits 15:8) | Byte 1 (Bits 7:0) |
|---|---|---|---|---|
| Set | | | | |
| Get | F0200h | | | |

| Field Name | Bits | R/W | Default | Reset |
|---|---|---|---|---|
| ConL3 | 31:24 | R | 19h | N/A (Hard-coded) |
| | DAC4 Converter widget (0x19) | | | |
| ConL2 | 23:16 | R | 1Eh | N/A (Hard-coded) |
| | MixerOutVol Selector widget (0x1E) | | | |
| ConL1Range | 15 | R | 1h | N/A (Hard-coded) |
| | = ConL0..ConL1 defines a range of selectable inputs. | | | |
| ConL1 | 14:8 | R | 16h | N/A (Hard-coded) |
| | DAC3 Converter widget (0x16) | | | |


©2014 TEMPO SEMICONDCUTOR, INC..

| Field Name | Bits | R/W | Default | Reset |
|---|---|---|---|---|
| ConL0 | 7:0 | R | 15h | N/A (Hard-coded) |
| | DAC0 Converter widget (0x15) | | | |

### 7.7.4. PortC (NID = 0Ch): InAmpLeft

| Reg | Byte 4 (Bits 31:24) | Byte 3 (Bits 23:16) | Byte 2 (Bits 15:8) | Byte 1 (Bits 7:0) |
|---|---|---|---|---|
| Set | | | | 360h |
| Get | B2000h | | | |

| Field Name | Bits | R/W | Default | Reset |
|---|---|---|---|---|
| Rsvd1 | 31:2 | R | 00000000h | N/A (Hard-coded) |
| | Reserved. | | | |
| Gain | 1:0 | RW | 0h | POR - DAFG - ULR |
| | Amp gain step number (see InAmpCap parameter pertaining to this widget). | | | |

### 7.7.5. PortC (NID = 0Ch): InAmpRight

| Reg | Byte 4 (Bits 31:24) | Byte 3 (Bits 23:16) | Byte 2 (Bits 15:8) | Byte 1 (Bits 7:0) |
|---|---|---|---|---|
| Set | | | | 350h |
| Get | B0000h | | | |

| Field Name | Bits | R/W | Default | Reset |
|---|---|---|---|---|
| Rsvd1 | 31:2 | R | 00000000h | N/A (Hard-coded) |
| | Reserved. | | | |
| Gain | 1:0 | RW | 0h | POR - DAFG - ULR |
| | Amp gain step number (see InAmpCap parameter pertaining to this widget). | | | |


©2014 TEMPO SEMICONDCUTOR, INC..

### *7.7.6. PortC (NID = 0Ch): ConSelectCtrl*

| Reg | Byte 4 (Bits 31:24) | Byte 3 (Bits 23:16) | Byte 2 (Bits 15:8) | Byte 1 (Bits 7:0) |
|---|---|---|---|---|
| Set | | | | 701h |
| Get | F0100h | | | |

| Field Name | Bits | R/W | Default | Reset |
|---|---|---|---|---|
| Rsvd | 31:2 | R | 00000000h | N/A (Hard-coded) |
| | Reserved. | | | |
| Index | 1:0 | RW | 0h | POR - DAFG - ULR |
| | Connection select control index. | | | |

### *7.7.7. PortC (NID = 0Ch): PwrState*

| Reg | Byte 4 (Bits 31:24) | Byte 3 (Bits 23:16) | Byte 2 (Bits 15:8) | Byte 1 (Bits 7:0) |
|---|---|---|---|---|
| Set | | | | 705h |
| Get | F0500h | | | |

| Field Name | Bits | R/W | Default | Reset |
|---|---|---|---|---|
| Rsvd4 | 31:11 | R | 000000h | N/A (Hard-coded) |
| | Reserved. | | | |
| SettingsReset | 10 | R | 1h | POR - DAFG - ULR |
| | Indicates if any persistent settings in this Widget have been reset. Cleared by PwrState 'Get', or a 'Set' to any Verb in this Widget. | | | |
| Rsvd3 | 9 | R | 0h | N/A (Hard-coded) |
| | Reserved. | | | |
| Error | 8 | R | 0h | POR - DAFG - ULR |
| | Error indicator: 1 = cannot enter requested power state, 0 = no problem with requested power state. | | | |


©2014 TEMPO SEMICONDCUTOR, INC..

| Field Name | Bits | R/W | Default | Reset |
|---|---|---|---|---|
| Rsvd2 | 7:6 | R | 0h | N/A (Hard-coded) |
| | Reserved. | | | |
| Act | 5:4 | R | 3h | POR - DAFG - LR |
| | Actual power state of this widget. | | | |
| Rsvd1 | 3:2 | R | 0h | N/A (Hard-coded) |
| | Reserved. | | | |
| Set | 1:0 | RW | 0h | POR - DAFG - LR |
| | Current power state setting for this widget. | | | |

### *7.7.8. PortC (NID = 0Ch): PinWCntrl*

| Reg | Byte 4 (Bits 31:24) | Byte 3 (Bits 23:16) | Byte 2 (Bits 15:8) | Byte 1 (Bits 7:0) |
|---|---|---|---|---|
| Set | | | | 707h |
| Get | F0700h | | | |

| Field Name | Bits | R/W | Default | Reset |
|---|---|---|---|---|
| Rsvd2 | 31:7 | R | 000000h | N/A (Hard-coded) |
| | Reserved. | | | |
| OutEn | 6 | RW | 0h | POR - DAFG - ULR |
| | Output enable: 1 = enabled, 0 = disabled. | | | |
| InEn | 5 | RW | 0h | POR - DAFG - ULR |
| | Input enable: 1 = enabled, 0 = disabled. | | | |
| Rsvd1 | 4:3 | RW | 00h | N/A (Hard-coded) |
| | Reserved. | | | |
| VRefEn | 2:0 | RW | 0h | POR - DAFG - ULR |


©2014 TEMPO SEMICONDCUTOR, INC..

| Field Name | Bits | R/W | Default | Reset |
|---|---|---|---|---|
| | Vref selection (See VrefCntrl field of PinCap parameter for supported selections):<br>000b= HI-Z<br>001b= 50%<br>010b= GND<br>011b= Reserved<br>100b= 80%<br>101b= 100%<br>110b= Reserved<br>111b= Reserved | | | |

### 7.7.9. PortC (NID = 0Ch): UnsolResp

| Reg | Byte 4 (Bits 31:24) | Byte 3 (Bits 23:16) | Byte 2 (Bits 15:8) | Byte 1 (Bits 7:0) |
|---|---|---|---|---|
| Set | | | | 708h |
| Get | F0800h | | | |

| Field Name | Bits | R/W | Default | Reset |
|---|---|---|---|---|
| Rsvd2 | 31:8 | R | 000000h | N/A (Hard-coded) |
| | Reserved. | | | |
| En | 7 | RW | 0h | POR - DAFG - ULR |
| | Unsolicited response enable (also enables Wake events for this Widget): 1 = enabled, 0 = disabled. | | | |
| Rsvd1 | 6 | R | 0h | N/A (Hard-coded) |
| | Reserved. | | | |
| Tag | 5:0 | RW | 00h | POR - DAFG - ULR |
| | Software programmable field returned in top six bits (31:26) of every Unsolicited Response generated by this node. | | | |

### 7.7.10. PortC (NID = 0Ch): ChSense

| Reg | Byte 4 (Bits 31:24) | Byte 3 (Bits 23:16) | Byte 2 (Bits 15:8) | Byte 1 (Bits 7:0) |
|---|---|---|---|---|
| Set | | | | 709h |
| Get | F0900h | | | |


©2014 TEMPO SEMICONDCUTOR, INC..

| Field Name | Bits | R/W | Default | Reset |
|---|---|---|---|---|
| PresDtct | 31 | R | 0h | POR |
| | Presence detection indicator: 1 = presence detected; 0 = presence not detected. | | | |
| Rsvd | 30:0 | R | 00000000h | N/A (Hard-coded) |
| | Reserved. | | | |

### *7.7.11. PortC (NID = 0Ch): EAPDBTLLR*

| Reg | Byte 4 (Bits 31:24) | Byte 3 (Bits 23:16) | Byte 2 (Bits 15:8) | Byte 1 (Bits 7:0) |
|---|---|---|---|---|
| Set | | | | 70Ch |
| Get | F0C00h | | | |

| Field Name | Bits | R/W | Default | Reset |
|---|---|---|---|---|
| Rsvd2 | 31:2 | R | 00000000h | N/A (Hard-coded) |
| | Reserved. | | | |
| EAPD | 1 | RW | 1h | POR - DAFG - ULR |
| | EAPD control: 1 = set EAPD pin to 1 (powered) up if this pin is powered up, 0 = set EAPD pin to 0. | | | |
| Rsvd1 | 0 | R | 0h | N/A (Hard-coded) |
| | Reserved. | | | |

### *7.7.12. PortC (NID = 0Ch): ConfigDefault*

| Reg | Byte 4 (Bits 31:24) | Byte 3 (Bits 23:16) | Byte 2 (Bits 15:8) | Byte 1 (Bits 7:0) |
|---|---|---|---|---|
| Set | 71Fh | 71Eh | 71Dh | 71Ch |
| Get | F1F00h / F1E00h / F1D00h / F1C00h | | | |


©2014 TEMPO SEMICONDCUTOR, INC..

| Field Name | Bits | R/W | Default | Reset |
|---|---|---|---|---|
| PortConnectivity | 31:30 | RW | 0h | POR |
| | Port connectivity:<br>0h = Port complex is connected to a jack<br>1h = No physical connection for port<br>2h = Fixed function device is attached<br>3h = Both jack and internal device attached (info in all other fields refers to integrated device, any presence detection refers to jack) | | | |
| Location | 29:24 | RW | 01h | POR |
| | Location<br><br>Bits [5..4]:<br>0h = External on primary chassis<br>1h = Internal<br>2h = Separate chassis<br>3h = Other<br><br>Bits [3..0]:<br>0h = N/A<br>1h = Rear<br>2h = Front<br>3h = Left<br>4h = Right<br>5h = Top<br>6h = Bottom<br>7h-9h = Special<br>Ah-Fh = Reserved | | | |


©2014 TEMPO SEMICONDCUTOR, INC..

| Field Name | Bits | R/W | Default | Reset |
|---|---|---|---|---|
| Device | 23:20 | RW | 8h | POR |
| | Default device:<br>0h = Line out<br>1h = Speaker<br>2h = HP out<br>3h = CD<br>4h = SPDIF Out<br>5h = Digital other out<br>6h = Modem line side<br>7h = Modem handset side<br>8h = Line in<br>9h = Aux<br>Ah = Mic in<br>Bh = Telephony<br>Ch = SPDIF In<br>Dh = Digital other in<br>Eh = Reserved<br>Fh = Other | | | |
| ConnectionType | 19:16 | RW | 1h | POR |
| | Connection type:<br>0h = Unknown<br>1h = 1/8" stereo/mono<br>2h = 1/4" stereo/mono<br>3h = ATAPI internal<br>4h = RCA<br>5h = Optical<br>6h = Other digital<br>7h = Other analog<br>8h = Multichannel analog (DIN)<br>9h = XLR/Professional<br>Ah = RJ-11 (modem)<br>Bh = Combination<br>Ch-Eh = Reserved<br>Fh = Other | | | |


©2014 TEMPO SEMICONDCUTOR, INC..

| Field Name | Bits | R/W | Default | Reset |
|---|---|---|---|---|
| Color | 15:12 | RW | 3h | POR |
| | Color:<br>0h = Unknown<br>1h = Black<br>2h = Grey<br>3h = Blue<br>4h = Green<br>5h = Red<br>6h = Orange<br>7h = Yellow<br>8h = Purple<br>9h = Pink<br>Ah-Dh = Reserved<br>Eh = White<br>Fh = Other | | | |
| Misc | 11:8 | RW | 0h | POR |
| | Miscellaneous:<br>Bits [3..1] = Reserved<br>Bit 0 = Jack detect override | | | |
| Association | 7:4 | RW | 4h | POR |
| | Default assocation. | | | |
| Sequence | 3:0 | RW | 0h | POR |
| | Sequence. | | | |


©2014 TEMPO SEMICONDCUTOR, INC..

## 7.8. PortD (NID = 0Dh): WCap

| Reg | Byte 4 (Bits 31:24) | Byte 3 (Bits 23:16) | Byte 2 (Bits 15:8) | Byte 1 (Bits 7:0) |
|---|---|---|---|---|
| Set | | | | |
| Get | F0009h | | | |

| Field Name | Bits | R/W | Default | Reset |
|---|---|---|---|---|
| Rsvd2 | 31:24 | R | 00h | N/A (Hard-coded) |
| | Reserved. | | | |
| Type | 23:20 | R | 4h | N/A (Hard-coded) |
| | Widget type:<br>0h = Out Converter<br>1h = In Converter<br>2h = Summing (Mixer)<br>3h = Selector (Mux)<br>4h = Pin Complex<br>5h = Power<br>6h = Volume Knob<br>7h = Beep Generator<br>8h-Eh = Reserved<br>Fh = Vendor Defined | | | |
| Delay | 19:16 | R | 0h | N/A (Hard-coded) |
| | Number of sample delays through widget. | | | |
| Rsvd1 | 15:12 | R | 0h | N/A (Hard-coded) |
| | Reserved. | | | |
| SwapCap | 11 | R | 0h | N/A (Hard-coded) |
| | Left/right swap support: 1 = yes, 0 = no. | | | |
| PwrCntrl | 10 | R | 1h | N/A (Hard-coded) |
| | Power state support: 1 = yes, 0 = no. | | | |
| Dig | 9 | R | 0h | N/A (Hard-coded) |
| | Digital stream support: 1 = yes (digital), 0 = no (analog). | | | |
| ConnList | 8 | R | 1h | N/A (Hard-coded) |
| | Connection list present: 1 = yes, 0 = no. | | | |


©2014 TEMPO SEMICONDCUTOR, INC..

| Field Name | Bits | R/W | Default | Reset |
|---|---|---|---|---|
| UnSolCap | 7 | R | 1h | N/A (Hard-coded) |
| | Unsolicited response support: 1 = yes, 0 = no. | | | |
| ProcWidget | 6 | R | 0h | N/A (Hard-coded) |
| | Processing state support: 1 = yes, 0 = no. | | | |
| Stripe | 5 | R | 0h | N/A (Hard-coded) |
| | Striping support: 1 = yes, 0 = no. | | | |
| FormatOvrd | 4 | R | 0h | N/A (Hard-coded) |
| | Stream format override: 1 = yes, 0 = no. | | | |
| AmpParOvrd | 3 | R | 0h | N/A (Hard-coded) |
| | Amplifier capabilities override: 1 = yes, no. | | | |
| OutAmpPrsnt | 2 | R | 0h | N/A (Hard-coded) |
| | Output amp present: 1 = yes, 0 = no. | | | |
| InAmpPrsnt | 1 | R | 1h | N/A (Hard-coded) |
| | Input amp present: 1 = yes, 0 = no. | | | |
| Stereo | 0 | R | 1h | N/A (Hard-coded) |
| | Stereo stream support: 1 = yes (stereo), 0 = no (mono). | | | |

### *7.8.1. PortD (NID = 0Dh): PinCap*

| Reg | Byte 4 (Bits 31:24) | Byte 3 (Bits 23:16) | Byte 2 (Bits 15:8) | Byte 1 (Bits 7:0) |
|---|---|---|---|---|
| Set | | | | |
| Get | F000Ch | | | |

| Field Name | Bits | R/W | Default | Reset |
|---|---|---|---|---|
| Rsvd2 | 31:17 | R | 0000h | N/A (Hard-coded) |
| | Reserved. | | | |


©2014 TEMPO SEMICONDCUTOR, INC..

| Field Name | Bits | R/W | Default | Reset |
|---|---|---|---|---|
| EapdCap | 16 | R | 1h | N/A (Hard-coded) |
| | EAPD support: 1 = yes, 0 = no. | | | |
| VrefCntrl | 15:8 | R | 00h | N/A (Hard-coded) |
| | Vref support:<br>bit 7 = Reserved<br>bit 6 = Reserved<br>bit 5 = 100% support (1 = yes, 0 = no)<br>bit 4 = 80% support (1 = yes, 0 = no)<br>bit 3 = Reserved<br>bit 2 = GND support (1 = yes, 0 = no)<br>bit 1 = 50% support (1 = yes, 0 = no)<br>bit 0 = Hi-Z support (1 = yes, 0 = no) | | | |
| Rsvd1 | 7 | R | 0h | N/A (Hard-coded) |
| | Reserved. | | | |
| BalancedIO | 6 | R | 0h | N/A (Hard-coded) |
| | Balanced I/O support: 1 = yes, 0 = no. | | | |
| InCap | 5 | R | 1h | N/A (Hard-coded) |
| | Input support: 1 = yes, 0 = no. | | | |
| OutCap | 4 | R | 1h | N/A (Hard-coded) |
| | Output support: 1 = yes, 0 = no. | | | |
| HdphDrvCap | 3 | R | 1h | N/A (Hard-coded) |
| | Headphone amp present: 1 = yes, 0 = no. | | | |
| PresDtctCap | 2 | R | 1h | N/A (Hard-coded) |
| | Presence detection support: 1 = yes, 0 = no. | | | |
| TrigRqd | 1 | R | 0h | N/A (Hard-coded) |
| | Trigger required for impedance sense: 1 = yes, 0 = no. | | | |
| ImpSenseCap | 0 | R | 0h | N/A (Hard-coded) |
| | Impedance sense support: 1 = yes, 0 = no. | | | |


©2014 TEMPO SEMICONDCUTOR, INC..

### *7.8.2. PortD (NID = 0Dh): ConLst*

| Reg | Byte 4 (Bits 31:24) | Byte 3 (Bits 23:16) | Byte 2 (Bits 15:8) | Byte 1 (Bits 7:0) |
|---|---|---|---|---|
| Set | | | | |
| Get | F000Eh | | | |

| Field Name | Bits | R/W | Default | Reset |
|---|---|---|---|---|
| Rsvd | 31:8 | R | 000000h | N/A (Hard-coded) |
| | Reserved. | | | |
| LForm | 7 | R | 0h | N/A (Hard-coded) |
| | Connection list format: 1 = long-form (15-bit) NID entries, 0 = short-form (7-bit) NID entries. | | | |
| ConL | 6:0 | R | 04h | N/A (Hard-coded) |
| | Number of NID entries in connection list. | | | |

### *7.8.3. PortD (NID = 0Dh): ConLstEntry0*

| Reg | Byte 4 (Bits 31:24) | Byte 3 (Bits 23:16) | Byte 2 (Bits 15:8) | Byte 1 (Bits 7:0) |
|---|---|---|---|---|
| Set | | | | |
| Get | F0200h | | | |

| Field Name | Bits | R/W | Default | Reset |
|---|---|---|---|---|
| ConL3 | 31:24 | R | 19h | N/A (Hard-coded) |
| | DAC4 Converter widget (0x19) | | | |
| ConL2 | 23:16 | R | 1Eh | N/A (Hard-coded) |
| | MixerOutVol Selector widget (0x1E) | | | |
| ConL1Range | 14:8 | R | 1h | N/A (Hard-coded) |
| | 1 = ConL0..ConL1 defines a range of selectable inputs. | | | |


©2014 TEMPO SEMICONDCUTOR, INC..

| Field Name | Bits | R/W | Default | Reset |
|---|---|---|---|---|
| ConL1 | 15:8 | R | 18h | N/A (Hard-coded) |
| | DAC3 Converter widget (0x18) | | | |
| ConL0 | 7:0 | R | 15h | N/A (Hard-coded) |
| | DAC0 Converter widget (0x15) | | | |

### *7.8.4. PortD (NID = 0Dh): InAmpLeft*

| Reg | Byte 4 (Bits 31:24) | Byte 3 (Bits 23:16) | Byte 2 (Bits 15:8) | Byte 1 (Bits 7:0) |
|---|---|---|---|---|
| Set | | | | 360h |
| Get | B2000h | | | |

| Field Name | Bits | R/W | Default | Reset |
|---|---|---|---|---|
| Rsvd1 | 31:2 | R | 00000000h | N/A (Hard-coded) |
| | Reserved. | | | |
| Gain | 1:0 | RW | 0h | POR - DAFG - ULR |
| | Amp gain step number (see InAmpCap parameter pertaining to this widget). | | | |

### *7.8.5. PortD (NID = 0Dh): InAmpRight*

| Reg | Byte 4 (Bits 31:24) | Byte 3 (Bits 23:16) | Byte 2 (Bits 15:8) | Byte 1 (Bits 7:0) |
|---|---|---|---|---|
| Set | | | | 350h |
| Get | B0000h | | | |

| Field Name | Bits | R/W | Default | Reset |
|---|---|---|---|---|
| Rsvd1 | 31:2 | R | 00000000h | N/A (Hard-coded) |
| | Reserved. | | | |


©2014 TEMPO SEMICONDCUTOR, INC..

| Field Name | Bits | R/W | Default | Reset |
|---|---|---|---|---|
| Gain | 1:0 | RW | 0h | POR - DAFG - ULR |
| | Amp gain step number (see InAmpCap parameter pertaining to this widget). | | | |

### *7.8.6. PortD (NID = 0Dh): ConSelectCtrl*

| Reg | Byte 4 (Bits 31:24) | Byte 3 (Bits 23:16) | Byte 2 (Bits 15:8) | Byte 1 (Bits 7:0) |
|---|---|---|---|---|
| Set | | | | 701h |
| Get | F0100h | | | |

| Field Name | Bits | R/W | Default | Reset |
|---|---|---|---|---|
| Rsvd | 31:2 | R | 00000000h | N/A (Hard-coded) |
| | Reserved. | | | |
| Index | 1:0 | RW | 0h | POR - DAFG - ULR |
| | Connection select control index. | | | |

### *7.8.7. PortD (NID = 0Dh): PwrState*

| Reg | Byte 4 (Bits 31:24) | Byte 3 (Bits 23:16) | Byte 2 (Bits 15:8) | Byte 1 (Bits 7:0) |
|---|---|---|---|---|
| Set | | | | 705h |
| Get | F0500h | | | |

| Field Name | Bits | R/W | Default | Reset |
|---|---|---|---|---|
| Rsvd4 | 31:11 | R | 000000h | N/A (Hard-coded) |
| | Reserved. | | | |
| SettingsReset | 10 | R | 1h | POR - DAFG - ULR |
| | Indicates if any persistent settings in this Widget have been reset. Cleared by PwrState 'Get', or a 'Set' to any Verb in this Widget. | | | |


©2014 TEMPO SEMICONDCUTOR, INC..

| Field Name | Bits | R/W | Default | Reset |
|---|---|---|---|---|
| Rsvd3 | 9 | R | 0h | N/A (Hard-coded) |
| | Reserved. | | | |
| Error | 8 | R | 0h | POR - DAFG - ULR |
| | Error indicator: 1 = cannot enter requested power state, 0 = no problem with requested power state. | | | |
| Rsvd2 | 7:6 | R | 0h | N/A (Hard-coded) |
| | Reserved. | | | |
| Act | 5:4 | R | 3h | POR - DAFG - LR |
| | Actual power state of this widget. | | | |
| Rsvd1 | 3:2 | R | 0h | N/A (Hard-coded) |
| | Reserved. | | | |
| Set | 1:0 | RW | 0h | POR - DAFG - LR |
| | Current power state setting for this widget. | | | |

### *7.8.8. PortD (NID = 0Dh): PinWCntrl*

| Reg | Byte 4 (Bits 31:24) | Byte 3 (Bits 23:16) | Byte 2 (Bits 15:8) | Byte 1 (Bits 7:0) |
|---|---|---|---|---|
| Set | | | | 707h |
| Get | F0700h | | | |

| Field Name | Bits | R/W | Default | Reset |
|---|---|---|---|---|
| Rsvd2 | 31:8 | R | 000000h | N/A (Hard-coded) |
| | Reserved. | | | |
| HPhnEn | 7 | RW | 0h | POR - DAFG - ULR |
| | Headphone amp enable: 1 = enabled, 0 = disabled | | | |
| OutEn | 6 | RW | 0h | POR - DAFG - ULR |
| | Output enable: 1 = enabled, 0 = disabled. | | | |


©2014 TEMPO SEMICONDCUTOR, INC..

| Field Name | Bits | R/W | Default | Reset |
|---|---|---|---|---|
| InEn | 5 | RW‘ | 0h | POR - DAFG - ULR |
| | Input enable: 1 = enabled, 0 = disabled | | | |
| Rsvd1 | 4:0 | R | 0h | N/A (Hard-coded) |
| | Reserved. | | | |

### *7.8.9. PortD (NID = 0Dh): UnsolResp*

| Reg | Byte 4 (Bits 31:24) | Byte 3 (Bits 23:16) | Byte 2 (Bits 15:8) | Byte 1 (Bits 7:0) |
|---|---|---|---|---|
| Set | | | | 708h |
| Get | F0800h | | | |

| Field Name | Bits | R/W | Default | Reset |
|---|---|---|---|---|
| Rsvd2 | 31:8 | R | 000000h | N/A (Hard-coded) |
| | Reserved. | | | |
| En | 7 | RW | 0h | POR - DAFG - ULR |
| | Unsolicited response enable (also enables Wake events for this Widget): 1 = enabled, 0 = disabled. | | | |
| Rsvd1 | 6 | R | 0h | N/A (Hard-coded) |
| | Reserved. | | | |
| Tag | 5:0 | RW | 00h | POR - DAFG - ULR |
| | Software programmable field returned in top six bits (31:26) of every Unsolicited Response generated by this node. | | | |

### *7.8.10. PortD (NID = 0Dh): ChSense*

| Reg | Byte 4 (Bits 31:24) | Byte 3 (Bits 23:16) | Byte 2 (Bits 15:8) | Byte 1 (Bits 7:0) |
|---|---|---|---|---|
| Set | | | | 709h |
| Get | F0900h | | | |


©2014 TEMPO SEMICONDCUTOR, INC..

| Field Name | Bits | R/W | Default | Reset |
|---|---|---|---|---|
| PresDtct | 31 | R | 0h | POR |
| | Presence detection indicator: 1 = presence detected; 0 = presence not detected. | | | |
| Rsvd | 30:0 | R | 00000000h | N/A (Hard-coded) |
| | Reserved. | | | |

### 7.8.11. PortD (NID = 0Dh): EAPDBTLLR

| Reg | Byte 4 (Bits 31:24) | Byte 3 (Bits 23:16) | Byte 2 (Bits 15:8) | Byte 1 (Bits 7:0) |
|---|---|---|---|---|
| Set | | | | 70Ch |
| Get | F0C00h | | | |

| Field Name | Bits | R/W | Default | Reset |
|---|---|---|---|---|
| Rsvd2 | 31:2 | R | 00000000h | N/A (Hard-coded) |
| | Reserved. | | | |
| EAPD | 1 | RW | 1h | POR - DAFG - ULR |
| | EAPD control: 1 = set EAPD pin to 1 (powered) up if this pin is powered up, 0 = set EAPD pin to 0. | | | |
| Rsvd1 | 0 | R | 0h | N/A (Hard-coded) |
| | Reserved. | | | |

### 7.8.12. PortD (NID = 0Dh): ConfigDefault

| Reg | Byte 4 (Bits 31:24) | Byte 3 (Bits 23:16) | Byte 2 (Bits 15:8) | Byte 1 (Bits 7:0) |
|---|---|---|---|---|
| Set | 71Fh | 71Eh | 71Dh | 71Ch |
| Get | F1F00h / F1E00h / F1D00h / F1C00h | | | |


©2014 TEMPO SEMICONDCUTOR, INC..

| Field Name | Bits | R/W | Default | Reset |
|---|---|---|---|---|
| PortConnectivity | 31:30 | RW | 0h | POR |
| | Port connectivity:<br>0h = Port complex is connected to a jack<br>1h = No physical connection for port<br>2h = Fixed function device is attached<br>3h = Both jack and internal device attached (info in all other fields refers to integrated device, any presence detection refers to jack) | | | |
| Location | 29:24 | RW | 01h | POR |
| | Location<br><br>Bits [5..4]:<br>0h = External on primary chassis<br>1h = Internal<br>2h = Separate chassis<br>3h = Other<br><br>Bits [3..0]:<br>0h = N/A<br>1h = Rear<br>2h = Front<br>3h = Left<br>4h = Right<br>5h = Top<br>6h = Bottom<br>7h-9h = Special<br>Ah-Fh = Reserved | | | |


©2014 TEMPO SEMICONDCUTOR, INC..

| Field Name | Bits | R/W | Default | Reset |
|---|---|---|---|---|
| Device | 23:20 | RW | 0h | POR |
| | Default device:<br>0h = Line out<br>1h = Speaker<br>2h = HP out<br>3h = CD<br>4h = SPDIF Out<br>5h = Digital other out<br>6h = Modem line side<br>7h = Modem handset side<br>8h = Line in<br>9h = Aux<br>Ah = Mic in<br>Bh = Telephony<br>Ch = SPDIF In<br>Dh = Digital other in<br>Eh = Reserved<br>Fh = Other | | | |
| ConnectionType | 19:16 | RW | 1h | POR |
| | Connection type:<br>0h = Unknown<br>1h = 1/8" stereo/mono<br>2h = 1/4" stereo/mono<br>3h = ATAPI internal<br>4h = RCA<br>5h = Optical<br>6h = Other digital<br>7h = Other analog<br>8h = Multichannel analog (DIN)<br>9h = XLR/Professional<br>Ah = RJ-11 (modem)<br>Bh = Combination<br>Ch-Eh = Reserved<br>Fh = Other | | | |


©2014 TEMPO SEMICONDCUTOR, INC..

| Field Name | Bits | R/W | Default | Reset |
|---|---|---|---|---|
| Color | 15:12 | RW | 4h | POR |
| | Color:<br>0h = Unknown<br>1h = Black<br>2h = Grey<br>3h = Blue<br>4h = Green<br>5h = Red<br>6h = Orange<br>7h = Yellow<br>8h = Purple<br>9h = Pink<br>Ah-Dh = Reserved<br>Eh = White<br>Fh = Other | | | |
| Misc | 11:8 | RW | 0h | POR |
| | Miscellaneous:<br>Bits [3..1] = Reserved<br>Bit 0 = Jack detect override | | | |
| Association | 7:4 | RW | 3h | POR |
| | Default assocation. | | | |
| Sequence | 3:0 | RW | 0h | POR |
| | Sequence. | | | |


©2014 TEMPO SEMICONDCUTOR, INC..

## 7.9. PortE (NID = 0Eh): WCap

| Reg | Byte 4 (Bits 31:24) | Byte 3 (Bits 23:16) | Byte 2 (Bits 15:8) | Byte 1 (Bits 7:0) |
|---|---|---|---|---|
| Set | | | | |
| Get | F0009h | | | |

| Field Name | Bits | R/W | Default | Reset |
|---|---|---|---|---|
| Rsvd2 | 31:24 | R | 00h | N/A (Hard-coded) |
| | Reserved. | | | |
| Type | 23:20 | R | 4h | N/A (Hard-coded) |
| | Widget type:<br>0h = Out Converter<br>1h = In Converter<br>2h = Summing (Mixer)<br>3h = Selector (Mux)<br>4h = Pin Complex<br>5h = Power<br>6h = Volume Knob<br>7h = Beep Generator<br>8h-Eh = Reserved<br>Fh = Vendor Defined | | | |
| Delay | 19:16 | R | 0h | N/A (Hard-coded) |
| | Number of sample delays through widget. | | | |
| Rsvd1 | 15:12 | R | 0h | N/A (Hard-coded) |
| | Reserved. | | | |
| SwapCap | 11 | R | 0h | N/A (Hard-coded) |
| | Left/right swap support: 1 = yes, 0 = no. | | | |
| PwrCntrl | 10 | R | 1h | N/A (Hard-coded) |
| | Power state support: 1 = yes, 0 = no. | | | |
| Dig | 9 | R | 0h | N/A (Hard-coded) |
| | Digital stream support: 1 = yes (digital), 0 = no (analog). | | | |
| ConnList | 8 | R | 1h | N/A (Hard-coded) |
| | Connection list present: 1 = yes, 0 = no. | | | |


©2014 TEMPO SEMICONDCUTOR, INC..

| Field Name | Bits | R/W | Default | Reset |
|---|---|---|---|---|
| UnSolCap | 7 | R | 1h | N/A (Hard-coded) |
| | Unsolicited response support: 1 = yes, 0 = no. | | | |
| ProcWidget | 6 | R | 0h | N/A (Hard-coded) |
| | Processing state support: 1 = yes, 0 = no. | | | |
| Stripe | 5 | R | 0h | N/A (Hard-coded) |
| | Striping support: 1 = yes, 0 = no. | | | |
| FormatOvrd | 4 | R | 0h | N/A (Hard-coded) |
| | Stream format override: 1 = yes, 0 = no. | | | |
| AmpParOvrd | 3 | R | 0h | N/A (Hard-coded) |
| | Amplifier capabilities override: 1 = yes, no. | | | |
| OutAmpPrsnt | 2 | R | 0h | N/A (Hard-coded) |
| | Output amp present: 1 = yes, 0 = no. | | | |
| InAmpPrsnt | 1 | R | 1h | N/A (Hard-coded) |
| | Input amp present: 1 = yes, 0 = no. | | | |
| Stereo | 0 | R | 1h | N/A (Hard-coded) |
| | Stereo stream support: 1 = yes (stereo), 0 = no (mono). | | | |

### *7.9.1. PortE (NID = 0Eh): PinCap*

| Reg | Byte 4 (Bits 31:24) | Byte 3 (Bits 23:16) | Byte 2 (Bits 15:8) | Byte 1 (Bits 7:0) |
|---|---|---|---|---|
| Set | | | | |
| Get | F000Ch | | | |

| Field Name | Bits | R/W | Default | Reset |
|---|---|---|---|---|
| Rsvd2 | 31:17 | R | 0000h | N/A (Hard-coded) |
| | Reserved. | | | |


©2014 TEMPO SEMICONDCUTOR, INC..

| Field Name | Bits | R/W | Default | Reset |
|---|---|---|---|---|
| EapdCap | 16 | R | 1h | N/A (Hard-coded) |
| | EAPD support: 1 = yes, 0 = no. | | | |
| VrefCntrl | 15:8 | R | 17h | N/A (Hard-coded) |
| | Vref support:<br>bit 7 = Reserved<br>bit 6 = Reserved<br>bit 5 = 100% support (1 = yes, 0 = no)<br>bit 4 = 80% support (1 = yes, 0 = no)<br>bit 3 = Reserved<br>bit 2 = GND support (1 = yes, 0 = no)<br>bit 1 = 50% support (1 = yes, 0 = no)<br>bit 0 = Hi-Z support (1 = yes, 0 = no) | | | |
| Rsvd1 | 7 | R | 0h | N/A (Hard-coded) |
| | Reserved. | | | |
| BalancedIO | 6 | R | 0h | N/A (Hard-coded) |
| | Balanced I/O support: 1 = yes, 0 = no. | | | |
| InCap | 5 | R | 1h | N/A (Hard-coded) |
| | Input support: 1 = yes, 0 = no. | | | |
| OutCap | 4 | R | 1h | N/A (Hard-coded) |
| | Output support: 1 = yes, 0 = no. | | | |
| HdphDrvCap | 3 | R | 0h | N/A (Hard-coded) |
| | Headphone amp present: 1 = yes, 0 = no. | | | |
| PresDtctCap | 2 | R | 1h | N/A (Hard-coded) |
| | Presence detection support: 1 = yes, 0 = no. | | | |
| TrigRqd | 1 | R | 0h | N/A (Hard-coded) |
| | Trigger required for impedance sense: 1 = yes, 0 = no. | | | |
| ImpSenseCap | 0 | R | 0h | N/A (Hard-coded) |
| | Impedance sense support: 1 = yes, 0 = no. | | | |


©2014 TEMPO SEMICONDCUTOR, INC..

### *7.9.2. PortE (NID = 0Eh): ConLst*

| Reg | Byte 4 (Bits 31:24) | Byte 3 (Bits 23:16) | Byte 2 (Bits 15:8) | Byte 1 (Bits 7:0) |
|---|---|---|---|---|
| Set | | | | |
| Get | F000Eh | | | |

| Field Name | Bits | R/W | Default | Reset |
|---|---|---|---|---|
| Rsvd | 31:8 | R | 000000h | N/A (Hard-coded) |
| | Reserved. | | | |
| LForm | 7 | R | 0h | N/A (Hard-coded) |
| | Connection list format: 1 = long-form (15-bit) NID entries, 0 = short-form (7-bit) NID entries. | | | |
| ConL | 6:0 | R | 04h | N/A (Hard-coded) |
| | Number of NID entries in connection list. | | | |

### *7.9.3. PortE (NID = 0Eh): ConLstEntry0*

| Reg | Byte 4 (Bits 31:24) | Byte 3 (Bits 23:16) | Byte 2 (Bits 15:8) | Byte 1 (Bits 7:0) |
|---|---|---|---|---|
| Set | | | | |
| Get | F0200h | | | |

| Field Name | Bits | R/W | Default | Reset |
|---|---|---|---|---|
| ConL3 | 31:24 | R | 19h | N/A (Hard-coded) |
| | DAC4 Converter widget (0x19) | | | |
| ConL2 | 23:16 | R | 1Eh | N/A (Hard-coded) |
| | MixerOutVol Selector widget (0x1E) | | | |
| ConL1Range | 14:8 | R | 1h | N/A (Hard-coded) |
| | 1 = ConL0..ConL1 defines a range of selectable inputs. | | | |


©2014 TEMPO SEMICONDCUTOR, INC..

| Field Name | Bits | R/W | Default | Reset |
|---|---|---|---|---|
| ConL1 | 15:8 | R | 18h | N/A (Hard-coded) |
| | DAC3 Converter widget (0x18) | | | |
| ConL0 | 7:0 | R | 15h | N/A (Hard-coded) |
| | DAC0 Converter widget (0x15) | | | |

### *7.9.4. PortE (NID = 0Eh): InAmpLeft*

| Reg | Byte 4 (Bits 31:24) | Byte 3 (Bits 23:16) | Byte 2 (Bits 15:8) | Byte 1 (Bits 7:0) |
|---|---|---|---|---|
| Set | | | | 360h |
| Get | B2000h | | | |

| Field Name | Bits | R/W | Default | Reset |
|---|---|---|---|---|
| Rsvd1 | 31:2 | R | 00000000h | N/A (Hard-coded) |
| | Reserved. | | | |
| Gain | 1:0 | RW | 0h | POR - DAFG - ULR |
| | Amp gain step number (see InAmpCap parameter pertaining to this widget). | | | |

### *7.9.5. PortE (NID = 0Eh): InAmpRight*

| Reg | Byte 4 (Bits 31:24) | Byte 3 (Bits 23:16) | Byte 2 (Bits 15:8) | Byte 1 (Bits 7:0) |
|---|---|---|---|---|
| Set | | | | 350h |
| Get | B0000h | | | |

| Field Name | Bits | R/W | Default | Reset |
|---|---|---|---|---|
| Rsvd1 | 31:2 | R | 00000000h | N/A (Hard-coded) |
| | Reserved. | | | |
| Gain | 1:0 | RW | 0h | POR - DAFG - ULR |
| | Amp gain step number (see InAmpCap parameter pertaining to this widget). | | | |


©2014 TEMPO SEMICONDCUTOR, INC..

### *7.9.6. PortE (NID = 0Eh): ConSelectCtrl*

| Reg | Byte 4 (Bits 31:24) | Byte 3 (Bits 23:16) | Byte 2 (Bits 15:8) | Byte 1 (Bits 7:0) |
|---|---|---|---|---|
| Set | | | | 701h |
| Get | F0100h | | | |

| Field Name | Bits | R/W | Default | Reset |
|---|---|---|---|---|
| Rsvd | 31:2 | R | 00000000h | N/A (Hard-coded) |
| | Reserved. | | | |
| Index | 1:0 | RW | 0h | POR - DAFG - ULR |
| | Connection select control index. | | | |

### *7.9.7. PortE (NID = 0Eh): PwrState*

| Reg | Byte 4 (Bits 31:24) | Byte 3 (Bits 23:16) | Byte 2 (Bits 15:8) | Byte 1 (Bits 7:0) |
|---|---|---|---|---|
| Set | | | | 705h |
| Get | F0500h | | | |

| Field Name | Bits | R/W | Default | Reset |
|---|---|---|---|---|
| Rsvd4 | 31:11 | R | 000000h | N/A (Hard-coded) |
| | Reserved. | | | |
| SettingsReset | 10 | R | 1h | POR - DAFG - ULR |
| | Indicates if any persistent settings in this Widget have been reset. Cleared by PwrState 'Get', or a 'Set' to any Verb in this Widget. | | | |
| Rsvd3 | 9 | R | 0h | N/A (Hard-coded) |
| | Reserved. | | | |
| Error | 8 | R | 0h | POR - DAFG - ULR |
| | Error indicator: 1 = cannot enter requested power state, 0 = no problem with requested power state. | | | |


©2014 TEMPO SEMICONDCUTOR, INC..

| Field Name | Bits | R/W | Default | Reset |
|---|---|---|---|---|
| Rsvd2 | 7:6 | R | 0h | N/A (Hard-coded) |
| | Reserved. | | | |
| Act | 5:4 | R | 3h | POR - DAFG - LR |
| | Actual power state of this widget. | | | |
| Rsvd1 | 3:2 | R | 0h | N/A (Hard-coded) |
| | Reserved. | | | |
| Set | 1:0 | RW | 0h | POR - DAFG - LR |
| | Current power state setting for this widget. | | | |

### *7.9.8. PortE (NID = 0Eh): PinWCntrl*

| Reg | Byte 4 (Bits 31:24) | Byte 3 (Bits 23:16) | Byte 2 (Bits 15:8) | Byte 1 (Bits 7:0) |
|---|---|---|---|---|
| Set | | | | 707h |
| Get | F0700h | | | |

| Field Name | Bits | R/W | Default | Reset |
|---|---|---|---|---|
| Rsvd2 | 31:7 | R | 000000h | N/A (Hard-coded) |
| | Reserved. | | | |
| OutEn | 6 | RW | 0h | POR - DAFG - ULR |
| | Output enable: 1 = enabled, 0 = disabled. | | | |
| InEn | 5 | RW | 1h | POR - DAFG - ULR |
| | Input enable: 1 = enabled, 0 = disabled. | | | |
| Rsvd1 | 4:3 | R | 0h | N/A (Hard-coded) |
| | Reserved. | | | |
| VRefEn | 2.0 | RW | 0h | POR - DAFG - ULR |


©2014 TEMPO SEMICONDCUTOR, INC..

| Field Name | Bits | R/W | Default | Reset |
|---|---|---|---|---|
| | Vref selection (See VrefCntrl field of PinCap parameter for supported selections):<br>000b= HI-Z<br>001b= 50%<br>010b= GND<br>011b= Reserved<br>100b= 80%<br>101b= 100%<br>110b= Reserved<br>111b= Reserved | | | |

### 7.9.9. PortE (NID = 0Eh): UnsolResp

| Reg | Byte 4 (Bits 31:24) | Byte 3 (Bits 23:16) | Byte 2 (Bits 15:8) | Byte 1 (Bits 7:0) |
|---|---|---|---|---|
| Set | | | | 708h |
| Get | F0800h | | | |

| Field Name | Bits | R/W | Default | Reset |
|---|---|---|---|---|
| Rsvd2 | 31:8 | R | 000000h | N/A (Hard-coded) |
| | Reserved. | | | |
| En | 7 | RW | 0h | POR - DAFG - ULR |
| | Unsolicited response enable (also enables Wake events for this Widget): 1 = enabled, 0 = disabled. | | | |
| Rsvd1 | 6 | R | 0h | N/A (Hard-coded) |
| | Reserved. | | | |
| Tag | 5:0 | RW | 00h | POR - DAFG - ULR |
| | Software programmable field returned in top six bits (31:26) of every Unsolicited Response generated by this node. | | | |

### 7.9.10. PortE (NID = 0Eh): ChSense

| Reg | Byte 4 (Bits 31:24) | Byte 3 (Bits 23:16) | Byte 2 (Bits 15:8) | Byte 1 (Bits 7:0) |
|---|---|---|---|---|
| Set | | | | 709h |
| Get | F0900h | | | |


©2014 TEMPO SEMICONDCUTOR, INC..

| Field Name | Bits | R/W | Default | Reset |
|---|---|---|---|---|
| PresDtct | 31 | R | 0h | POR |
| | Presence detection indicator: 1 = presence detected; 0 = presence not detected. | | | |
| Rsvd | 30:0 | R | 00000000h | N/A (Hard-coded) |
| | Reserved. | | | |

### 7.9.11. PortE (NID = 0Eh): EAPDBTLLR

| Reg | Byte 4 (Bits 31:24) | Byte 3 (Bits 23:16) | Byte 2 (Bits 15:8) | Byte 1 (Bits 7:0) |
|---|---|---|---|---|
| Set | | | | 70Ch |
| Get | F0C00h | | | |

| Field Name | Bits | R/W | Default | Reset |
|---|---|---|---|---|
| Rsvd2 | 31:2 | R | 00000000h | N/A (Hard-coded) |
| | Reserved. | | | |
| EAPD | 1 | RW | 1h | POR - DAFG - ULR |
| | EAPD control: 1 = set EAPD pin to 1 (powered) up if this pin is powered up, 0 = set EAPD pin to 0. | | | |
| Rsvd1 | 0 | R | 0h | N/A (Hard-coded) |
| | Reserved. | | | |

### 7.9.12. PortE (NID = 0Eh): ConfigDefault

| Reg | Byte 4 (Bits 31:24) | Byte 3 (Bits 23:16) | Byte 2 (Bits 15:8) | Byte 1 (Bits 7:0) |
|---|---|---|---|---|
| Set | 71Fh | 71Eh | 71Dh | 71Ch |
| Get | F1F00h / F1E00h / F1D00h / F1C00h | | | |


©2014 TEMPO SEMICONDCUTOR, INC..

| Field Name | Bits | R/W | Default | Reset |
|---|---|---|---|---|
| PortConnectivity | 31:30 | RW | 0h | POR |
| | Port connectivity:<br>0h = Port complex is connected to a jack<br>1h = No physical connection for port<br>2h = Fixed function device is attached<br>3h = Both jack and internal device attached (info in all other fields refers to integrated device, any presence detection refers to jack) | | | |
| Location | 29:24 | RW | 01h | POR |
| | Location<br><br>Bits [5..4]:<br>0h = External on primary chassis<br>1h = Internal<br>2h = Separate chassis<br>3h = Other<br><br>Bits [3..0]:<br>0h = N/A<br>1h = Rear<br>2h = Front<br>3h = Left<br>4h = Right<br>5h = Top<br>6h = Bottom<br>7h-9h = Special<br>Ah-Fh = Reserved | | | |


©2014 TEMPO SEMICONDCUTOR, INC..

| Field Name | Bits | R/W | Default | Reset |
|---|---|---|---|---|
| Device | 23:20 | RW | Ah | POR |
| | Default device:<br>0h = Line out<br>1h = Speaker<br>2h = HP out<br>3h = CD<br>4h = SPDIF Out<br>5h = Digital other out<br>6h = Modem line side<br>7h = Modem handset side<br>8h = Line in<br>9h = Aux<br>Ah = Mic in<br>Bh = Telephony<br>Ch = SPDIF In<br>Dh = Digital other in<br>Eh = Reserved<br>Fh = Other | | | |
| ConnectionType | 19:16 | RW | 1h | POR |
| | Connection type:<br>0h = Unknown<br>1h = 1/8" stereo/mono<br>2h = 1/4" stereo/mono<br>3h = ATAPI internal<br>4h = RCA<br>5h = Optical<br>6h = Other digital<br>7h = Other analog<br>8h = Multichannel analog (DIN)<br>9h = XLR/Professional<br>Ah = RJ-11 (modem)<br>Bh = Combination<br>Ch-Eh = Reserved<br>Fh = Other | | | |


©2014 TEMPO SEMICONDCUTOR, INC..

| Field Name | Bits | R/W | Default | Reset |
|---|---|---|---|---|
| Color | 15:12 | RW | 9h | POR |
| | Color:<br>0h = Unknown<br>1h = Black<br>2h = Grey<br>3h = Blue<br>4h = Green<br>5h = Red<br>6h = Orange<br>7h = Yellow<br>8h = Purple<br>9h = Pink<br>Ah-Dh = Reserved<br>Eh = White<br>Fh = Other | | | |
| Misc | 11:8 | RW | 0h | POR |
| | Miscellaneous:<br>Bits [3..1] = Reserved<br>Bit 0 = Jack detect override | | | |
| Association | 7:4 | RW | 4h | POR |
| | Default assocation. | | | |
| Sequence | 3:0 | RW | Eh | POR |
| | Sequence. | | | |


©2014 TEMPO SEMICONDCUTOR, INC..

## 7.10. PortF (NID = 0Fh): WCap

| Reg | Byte 4 (Bits 31:24) | Byte 3 (Bits 23:16) | Byte 2 (Bits 15:8) | Byte 1 (Bits 7:0) |
|---|---|---|---|---|
| Set | | | | |
| Get | F0009h | | | |

| Field Name | Bits | R/W | Default | Reset |
|---|---|---|---|---|
| Rsvd2 | 31:24 | R | 00h | N/A (Hard-coded) |
| | Reserved. | | | |
| Type | 23:20 | R | 4h | N/A (Hard-coded) |
| | Widget type:<br>0h = Out Converter<br>1h = In Converter<br>2h = Summing (Mixer)<br>3h = Selector (Mux)<br>4h = Pin Complex<br>5h = Power<br>6h = Volume Knob<br>7h = Beep Generator<br>8h-Eh = Reserved<br>Fh = Vendor Defined | | | |
| Delay | 19:16 | R | 0h | N/A (Hard-coded) |
| | Number of sample delays through widget. | | | |
| Rsvd1 | 15:12 | R | 0h | N/A (Hard-coded) |
| | Reserved. | | | |
| SwapCap | 11 | R | 0h | N/A (Hard-coded) |
| | Left/right swap support: 1 = yes, 0 = no. | | | |
| PwrCntrl | 10 | R | 1h | N/A (Hard-coded) |
| | Power state support: 1 = yes, 0 = no. | | | |
| Dig | 9 | R | 0h | N/A (Hard-coded) |
| | Digital stream support: 1 = yes (digital), 0 = no (analog). | | | |
| ConnList | 8 | R | 1h | N/A (Hard-coded) |
| | Connection list present: 1 = yes, 0 = no. | | | |


©2014 TEMPO SEMICONDCUTOR, INC..

| Field Name | Bits | R/W | Default | Reset |
|---|---|---|---|---|
| UnSolCap | 7 | R | 1h | N/A (Hard-coded) |
| | Unsolicited response support: 1 = yes, 0 = no. | | | |
| ProcWidget | 6 | R | 0h | N/A (Hard-coded) |
| | Processing state support: 1 = yes, 0 = no. | | | |
| Stripe | 5 | R | 0h | N/A (Hard-coded) |
| | Striping support: 1 = yes, 0 = no. | | | |
| FormatOvrd | 4 | R | 0h | N/A (Hard-coded) |
| | Stream format override: 1 = yes, 0 = no. | | | |
| AmpParOvrd | 3 | R | 0h | N/A (Hard-coded) |
| | Amplifier capabilities override: 1 = yes, no. | | | |
| OutAmpPrsnt | 2 | R | 0h | N/A (Hard-coded) |
| | Output amp present: 1 = yes, 0 = no. | | | |
| InAmpPrsnt | 1 | R | 1h | N/A (Hard-coded) |
| | Input amp present: 1 = yes, 0 = no. | | | |
| Stereo | 0 | R | 1h | N/A (Hard-coded) |
| | Stereo stream support: 1 = yes (stereo), 0 = no (mono). | | | |

### *7.10.1. PortF (NID = 0Fh): PinCap*

| Reg | Byte 4 (Bits 31:24) | Byte 3 (Bits 23:16) | Byte 2 (Bits 15:8) | Byte 1 (Bits 7:0) |
|---|---|---|---|---|
| Set | | | | |
| Get | F000Ch | | | |

| Field Name | Bits | R/W | Default | Reset |
|---|---|---|---|---|
| Rsvd2 | 31:17 | R | 0000h | N/A (Hard-coded) |
| | Reserved. | | | |


©2014 TEMPO SEMICONDCUTOR, INC..

| Field Name | Bits | R/W | Default | Reset |
|---|---|---|---|---|
| EapdCap | 16 | R | 1h | N/A (Hard-coded) |
| | EAPD support: 1 = yes, 0 = no. | | | |
| VrefCntrl | 15:8 | R | 00h | N/A (Hard-coded) |
| | Vref support:<br>bit 7 = Reserved<br>bit 6 = Reserved<br>bit 5 = 100% support (1 = yes, 0 = no)<br>bit 4 = 80% support (1 = yes, 0 = no)<br>bit 3 = Reserved<br>bit 2 = GND support (1 = yes, 0 = no)<br>bit 1 = 50% support (1 = yes, 0 = no)<br>bit 0 = Hi-Z support (1 = yes, 0 = no) | | | |
| Rsvd1 | 7 | R | 0h | N/A (Hard-coded) |
| | Reserved. | | | |
| BalancedIO | 6 | R | 0h | N/A (Hard-coded) |
| | Balanced I/O support: 1 = yes, 0 = no. | | | |
| InCap | 5 | R | 1h | N/A (Hard-coded) |
| | Input support: 1 = yes, 0 = no. | | | |
| OutCap | 4 | R | 1h | N/A (Hard-coded) |
| | Output support: 1 = yes, 0 = no. | | | |
| HdphDrvCap | 3 | R | 0h | N/A (Hard-coded) |
| | Headphone amp present: 1 = yes, 0 = no. | | | |
| PresDtctCap | 2 | R | 1h | N/A (Hard-coded) |
| | Presence detection support: 1 = yes, 0 = no. | | | |
| TrigRqd | 1 | R | 0h | N/A (Hard-coded) |
| | Trigger required for impedance sense: 1 = yes, 0 = no. | | | |
| ImpSenseCap | 0 | R | 0h | N/A (Hard-coded) |
| | Impedance sense support: 1 = yes, 0 = no. | | | |


©2014 TEMPO SEMICONDCUTOR, INC..

### *7.10.2. PortF (NID = 0Fh): ConLst*

| Reg | Byte 4 (Bits 31:24) | Byte 3 (Bits 23:16) | Byte 2 (Bits 15:8) | Byte 1 (Bits 7:0) |
|---|---|---|---|---|
| Set | | | | |
| Get | F000Eh | | | |

| Field Name | Bits | R/W | Default | Reset |
|---|---|---|---|---|
| Rsvd | 31:8 | R | 000000h | N/A (Hard-coded) |
| | Reserved. | | | |
| LForm | 7 | R | 0h | N/A (Hard-coded) |
| | Connection list format: 1 = long-form (15-bit) NID entries, 0 = short-form (7-bit) NID entries. | | | |
| ConL | 6:0 | R | 04h | N/A (Hard-coded) |
| | Number of NID entries in connection list. | | | |

### *7.10.3. PortF (NID = 0Fh): ConLstEntry0*

| Reg | Byte 4 (Bits 31:24) | Byte 3 (Bits 23:16) | Byte 2 (Bits 15:8) | Byte 1 (Bits 7:0) |
|---|---|---|---|---|
| Set | | | | |
| Get | F0200h | | | |

| Field Name | Bits | R/W | Default | Reset |
|---|---|---|---|---|
| ConL3 | 31:24 | R | 19h | N/A (Hard-coded) |
| | DAC4 Converter widget (0x19) | | | |
| ConL2 | 23:16 | R | 1Eh | N/A (Hard-coded) |
| | MixerOutVol Selector widget (0x1E) | | | |
| ConL1Range | 14:8 | R | 1h | N/A (Hard-coded) |
| | 1 = ConL0..ConL1 defines a range of selectable inputs. | | | |


©2014 TEMPO SEMICONDCUTOR, INC..

| Field Name | Bits | R/W | Default | Reset |
|---|---|---|---|---|
| ConL1 | 15:8 | R | 18h | N/A (Hard-coded) |
| | DAC3 Converter widget (0x18) | | | |
| ConL0 | 7:0 | R | 15h | N/A (Hard-coded) |
| | DAC0 Converter widget (0x15) | | | |

### *7.10.4. PortF (NID = 0Fh): InAmpLeft*

| Reg | Byte 4 (Bits 31:24) | Byte 3 (Bits 23:16) | Byte 2 (Bits 15:8) | Byte 1 (Bits 7:0) |
|---|---|---|---|---|
| Set | | | | 360h |
| Get | B2000h | | | |

| Field Name | Bits | R/W | Default | Reset |
|---|---|---|---|---|
| Rsvd1 | 31:2 | R | 00000000h | N/A (Hard-coded) |
| | Reserved. | | | |
| Gain | 1:0 | RW | 0h | POR - DAFG - ULR |
| | Amp gain step number (see InAmpCap parameter pertaining to this widget). | | | |

### *7.10.5. PortF (NID = 0Fh): InAmpRight*

| Reg | Byte 4 (Bits 31:24) | Byte 3 (Bits 23:16) | Byte 2 (Bits 15:8) | Byte 1 (Bits 7:0) |
|---|---|---|---|---|
| Set | | | | 350h |
| Get | B0000h | | | |

| Field Name | Bits | R/W | Default | Reset |
|---|---|---|---|---|
| Rsvd1 | 31:2 | R | 00000000h | N/A (Hard-coded) |
| | Reserved. | | | |
| Gain | 1:0 | RW | 0h | POR - DAFG - ULR |
| | Amp gain step number (see InAmpCap parameter pertaining to this widget). | | | |


©2014 TEMPO SEMICONDCUTOR, INC..

### *7.10.6. PortF (NID = 0Fh): ConSelectCtrl*

| Reg | Byte 4 (Bits 31:24) | Byte 3 (Bits 23:16) | Byte 2 (Bits 15:8) | Byte 1 (Bits 7:0) |
|---|---|---|---|---|
| Set | | | | 701h |
| Get | F0100h | | | |

| Field Name | Bits | R/W | Default | Reset |
|---|---|---|---|---|
| Rsvd | 31:2 | R | 00000000h | N/A (Hard-coded) |
| | Reserved. | | | |
| Index | 1:0 | RW | 0h | POR - DAFG - ULR |
| | Connection select control index. | | | |

### *7.10.7. PortF (NID = 0Fh): PwrState*

| Reg | Byte 4 (Bits 31:24) | Byte 3 (Bits 23:16) | Byte 2 (Bits 15:8) | Byte 1 (Bits 7:0) |
|---|---|---|---|---|
| Set | | | | 705h |
| Get | F0500h | | | |

| Field Name | Bits | R/W | Default | Reset |
|---|---|---|---|---|
| Rsvd4 | 31:11 | R | 000000h | N/A (Hard-coded) |
| | Reserved. | | | |
| SettingsReset | 10 | R | 1h | POR - DAFG - ULR |
| | Indicates if any persistent settings in this Widget have been reset. Cleared by PwrState 'Get', or a 'Set' to any Verb in this Widget. | | | |
| Rsvd3 | 9 | R | 0h | N/A (Hard-coded) |
| | Reserved. | | | |
| Error | 8 | R | 0h | POR - DAFG - ULR |
| | Error indicator: 1 = cannot enter requested power state, 0 = no problem with requested power state. | | | |


©2014 TEMPO SEMICONDCUTOR, INC..

| Field Name | Bits | R/W | Default | Reset |
|---|---|---|---|---|
| Rsvd2 | 7:6 | R | 0h | N/A (Hard-coded) |
| | Reserved. | | | |
| Act | 5:4 | R | 3h | POR - DAFG - LR |
| | Actual power state of this widget. | | | |
| Rsvd1 | 3:2 | R | 0h | N/A (Hard-coded) |
| | Reserved. | | | |
| Set | 1:0 | RW | 0h | POR - DAFG - LR |
| | Current power state setting for this widget. | | | |

### *7.10.8. PortF (NID = 0Fh): PinWCntrl*

| Reg | Byte 4 (Bits 31:24) | Byte 3 (Bits 23:16) | Byte 2 (Bits 15:8) | Byte 1 (Bits 7:0) |
|---|---|---|---|---|
| Set | | | | 707h |
| Get | F0700h | | | |

| Field Name | Bits | R/W | Default | Reset |
|---|---|---|---|---|
| Rsvd2 | 31:7 | R | 000000h | N/A (Hard-coded) |
| | Reserved. | | | |
| OutEn | 6 | RW | 0h | POR - DAFG - ULR |
| | Output enable: 1 = enabled, 0 = disabled. | | | |
| InEn | 5 | RW | 0h | POR - DAFG - ULR |
| | Input enable: 1 = enabled, 0 = disabled. | | | |
| Rsvd1 | 4:0 | R | 0h | N/A (Hard-coded) |
| | Reserved. | | | |


©2014 TEMPO SEMICONDCUTOR, INC..

### 7.10.9. PortF (NID = 0Fh): UnsolResp

| Reg | Byte 4 (Bits 31:24) | Byte 3 (Bits 23:16) | Byte 2 (Bits 15:8) | Byte 1 (Bits 7:0) |
|---|---|---|---|---|
| Set | | | | 708h |
| Get | F0800h | | | |

| Field Name | Bits | R/W | Default | Reset |
|---|---|---|---|---|
| Rsvd2 | 31:8 | R | 000000h | N/A (Hard-coded) |
| | Reserved. | | | |
| En | 7 | RW | 0h | POR - DAFG - ULR |
| | Unsolicited response enable (also enables Wake events for this Widget): 1 = enabled, 0 = disabled. | | | |
| Rsvd1 | 6 | R | 0h | N/A (Hard-coded) |
| | Reserved. | | | |
| Tag | 5:0 | RW | 00h | POR - DAFG - ULR |
| | Software programmable field returned in top six bits (31:26) of every Unsolicited Response generated by this node. | | | |

### 7.10.10. PortF (NID = 0Fh): ChSense

| Reg | Byte 4 (Bits 31:24) | Byte 3 (Bits 23:16) | Byte 2 (Bits 15:8) | Byte 1 (Bits 7:0) |
|---|---|---|---|---|
| Set | | | | 709h |
| Get | F0900h | | | |

| Field Name | Bits | R/W | Default | Reset |
|---|---|---|---|---|
| PresDtct | 31 | R | 0h | POR |
| | Presence detection indicator: 1 = presence detected; 0 = presence not detected. | | | |
| Rsvd | 30:0 | R | 00000000h | N/A (Hard-coded) |
| | Reserved. | | | |


©2014 TEMPO SEMICONDCUTOR, INC..

### *7.10.11. PortF (NID = 0Fh): EAPDBTLLR*

| Reg | Byte 4 (Bits 31:24) | Byte 3 (Bits 23:16) | Byte 2 (Bits 15:8) | Byte 1 (Bits 7:0) |
|---|---|---|---|---|
| Set | | | | 70Ch |
| Get | F0C00h | | | |

| Field Name | Bits | R/W | Default | Reset |
|---|---|---|---|---|
| Rsvd2 | 31:2 | R | 00000000h | N/A (Hard-coded) |
| | Reserved. | | | |
| EAPD | 1 | RW | 1h | POR - DAFG - ULR |
| | EAPD control: 1 = set EAPD pin to 1 (powered) up if this pin is powered up, 0 = set EAPD pin to 0. | | | |
| Rsvd1 | 0 | R | 0h | N/A (Hard-coded) |
| | Reserved. | | | |

### *7.10.12. PortF (NID = 0Fh): ConfigDefault*

| Reg | Byte 4 (Bits 31:24) | Byte 3 (Bits 23:16) | Byte 2 (Bits 15:8) | Byte 1 (Bits 7:0) |
|---|---|---|---|---|
| Set | 71Fh | 71Eh | 71Dh | 71Ch |
| Get | F1F00h / F1E00h / F1D00h / F1C00h | | | |

| Field Name | Bits | R/W | Default | Reset |
|---|---|---|---|---|
| PortConnectivity | 31:30 | RW | 0h | POR |
| | Port connectivity:<br>0h = Port complex is connected to a jack<br>1h = No physical connection for port<br>2h = Fixed function device is attached<br>3h = Both jack and internal device attached (info in all other fields refers to integrated device, any presence detection refers to jack) | | | |


©2014 TEMPO SEMICONDCUTOR, INC..

| Field Name | Bits | R/W | Default | Reset |
|---|---|---|---|---|
| Location | 29:24 | RW | 01h | POR |
| | Location<br><br>Bits [5..4]:<br>0h = External on primary chassis<br>1h = Internal<br>2h = Separate chassis<br>3h = Other<br><br>Bits [3..0]:<br>0h = N/A<br>1h = Rear<br>2h = Front<br>3h = Left<br>4h = Right<br>5h = Top<br>6h = Bottom<br>7h-9h = Special<br>Ah-Fh = Reserved | | | |
| Device | 23:20 | RW | 0h | POR |
| | Default device:<br>0h = Line out<br>1h = Speaker<br>2h = HP out<br>3h = CD<br>4h = SPDIF Out<br>5h = Digital other out<br>6h = Modem line side<br>7h = Modem handset side<br>8h = Line in<br>9h = Aux<br>Ah = Mic in<br>Bh = Telephony<br>Ch = SPDIF In<br>Dh = Digital other in<br>Eh = Reserved<br>Fh = Other | | | |


©2014 TEMPO SEMICONDCUTOR, INC..

| Field Name | Bits | R/W | Default | Reset |
|---|---|---|---|---|
| ConnectionType | 19:16 | RW | 1h | POR |
| | Connection type:<br>0h = Unknown<br>1h = 1/8" stereo/mono<br>2h = 1/4" stereo/mono<br>3h = ATAPI internal<br>4h = RCA<br>5h = Optical<br>6h = Other digital<br>7h = Other analog<br>8h = Multichannel analog (DIN)<br>9h = XLR/Professional<br>Ah = RJ-11 (modem)<br>Bh = Combination<br>Ch-Eh = Reserved<br>Fh = Other | | | |
| Color | 15:12 | RW | 1h | POR |
| | Color:<br>0h = Unknown<br>1h = Black<br>2h = Grey<br>3h = Blue<br>4h = Green<br>5h = Red<br>6h = Orange<br>7h = Yellow<br>8h = Purple<br>9h = Pink<br>Ah-Dh = Reserved<br>Eh = White<br>Fh = Other | | | |
| Misc | 11:8 | RW | 0h | POR |
| | Miscellaneous:<br>Bits [3..1] = Reserved<br>Bit 0 = Jack detect override | | | |
| Association | 7:4 | RW | 3h | POR |
| | Default assocation. | | | |
| Sequence | 3:0 | RW | 2h | POR |
| | Sequence. | | | |


©2014 TEMPO SEMICONDCUTOR, INC..

## 7.11. PortG (NID = 10h): WCap

| Reg | Byte 4 (Bits 31:24) | Byte 3 (Bits 23:16) | Byte 2 (Bits 15:8) | Byte 1 (Bits 7:0) |
|---|---|---|---|---|
| Set | | | | |
| Get | F0009h | | | |

| Field Name | Bits | R/W | Default | Reset |
|---|---|---|---|---|
| Rsvd2 | 31:24 | R | 00h | N/A (Hard-coded) |
| | Reserved. | | | |
| Type | 23:20 | R | 4h | N/A (Hard-coded) |
| | Widget type:<br>0h = Out Converter<br>1h = In Converter<br>2h = Summing (Mixer)<br>3h = Selector (Mux)<br>4h = Pin Complex<br>5h = Power<br>6h = Volume Knob<br>7h = Beep Generator<br>8h-Eh = Reserved<br>Fh = Vendor Defined | | | |
| Delay | 19:16 | R | 0h | N/A (Hard-coded) |
| | Number of sample delays through widget. | | | |
| Rsvd1 | 15:12 | R | 0h | N/A (Hard-coded) |
| | Reserved. | | | |
| SwapCap | 11 | R | 0h | N/A (Hard-coded) |
| | Left/right swap support: 1 = yes, 0 = no. | | | |
| PwrCntrl | 10 | R | 1h | N/A (Hard-coded) |
| | Power state support: 1 = yes, 0 = no. | | | |
| Dig | 9 | R | 0h | N/A (Hard-coded) |
| | Digital stream support: 1 = yes (digital), 0 = no (analog). | | | |
| ConnList | 8 | R | 1h | N/A (Hard-coded) |
| | Connection list present: 1 = yes, 0 = no. | | | |


©2014 TEMPO SEMICONDCUTOR, INC..

| Field Name | Bits | R/W | Default | Reset |
|---|---|---|---|---|
| UnSolCap | 7 | R | 1h | N/A (Hard-coded) |
| | Unsolicited response support: 1 = yes, 0 = no. | | | |
| ProcWidget | 6 | R | 0h | N/A (Hard-coded) |
| | Processing state support: 1 = yes, 0 = no. | | | |
| Stripe | 5 | R | 0h | N/A (Hard-coded) |
| | Striping support: 1 = yes, 0 = no. | | | |
| FormatOvrd | 4 | R | 0h | N/A (Hard-coded) |
| | Stream format override: 1 = yes, 0 = no. | | | |
| AmpParOvrd | 3 | R | 0h | N/A (Hard-coded) |
| | Amplifier capabilities override: 1 = yes, no. | | | |
| OutAmpPrsnt | 2 | R | 0h | N/A (Hard-coded) |
| | Output amp present: 1 = yes, 0 = no. | | | |
| InAmpPrsnt | 1 | R | 1h | N/A (Hard-coded) |
| | Input amp present: 1 = yes, 0 = no. | | | |
| Stereo | 0 | R | 1h | N/A (Hard-coded) |
| | Stereo stream support: 1 = yes (stereo), 0 = no (mono). | | | |

### *7.11.1. PortG (NID = 10h): PinCap*

| Reg | Byte 4 (Bits 31:24) | Byte 3 (Bits 23:16) | Byte 2 (Bits 15:8) | Byte 1 (Bits 7:0) |
|---|---|---|---|---|
| Set | | | | |
| Get | F000Ch | | | |

| Field Name | Bits | R/W | Default | Reset |
|---|---|---|---|---|
| Rsvd2 | 31:17 | R | 0000h | N/A (Hard-coded) |
| | Reserved. | | | |


©2014 TEMPO SEMICONDCUTOR, INC..

| Field Name | Bits | R/W | Default | Reset |
|---|---|---|---|---|
| EapdCap | 16 | R | 1h | N/A (Hard-coded) |
| | EAPD support: 1 = yes, 0 = no. | | | |
| VrefCntrl | 15:8 | R | 00h | N/A (Hard-coded) |
| | Vref support:<br>bit 7 = Reserved<br>bit 6 = Reserved<br>bit 5 = 100% support (1 = yes, 0 = no)<br>bit 4 = 80% support (1 = yes, 0 = no)<br>bit 3 = Reserved<br>bit 2 = GND support (1 = yes, 0 = no)<br>bit 1 = 50% support (1 = yes, 0 = no)<br>bit 0 = Hi-Z support (1 = yes, 0 = no) | | | |
| Rsvd1 | 7 | R | 0h | N/A (Hard-coded) |
| | Reserved. | | | |
| BalancedIO | 6 | R | 0h | N/A (Hard-coded) |
| | Balanced I/O support: 1 = yes, 0 = no. | | | |
| InCap | 5 | R | 1h | N/A (Hard-coded) |
| | Input support: 1 = yes, 0 = no. | | | |
| OutCap | 4 | R | 1h | N/A (Hard-coded) |
| | Output support: 1 = yes, 0 = no. | | | |
| HdphDrvCap | 3 | R | 0h | N/A (Hard-coded) |
| | Headphone amp present: 1 = yes, 0 = no. | | | |
| PresDtctCap | 2 | R | 1h | N/A (Hard-coded) |
| | Presence detection support: 1 = yes, 0 = no. | | | |
| TrigRqd | 1 | R | 0h | N/A (Hard-coded) |
| | Trigger required for impedance sense: 1 = yes, 0 = no. | | | |
| ImpSenseCap | 0 | R | 0h | N/A (Hard-coded) |
| | Impedance sense support: 1 = yes, 0 = no. | | | |


©2014 TEMPO SEMICONDCUTOR, INC..

### 7.11.2. PortG (NID = 10h): ConLst

| Reg | Byte 4 (Bits 31:24) | Byte 3 (Bits 23:16) | Byte 2 (Bits 15:8) | Byte 1 (Bits 7:0) |
|---|---|---|---|---|
| Set | | | | |
| Get | F000Eh | | | |

| Field Name | Bits | R/W | Default | Reset |
|---|---|---|---|---|
| Rsvd | 31:8 | R | 000000h | N/A (Hard-coded) |
| | Reserved. | | | |
| LForm | 7 | R | 0h | N/A (Hard-coded) |
| | Connection list format: 1 = long-form (15-bit) NID entries, 0 = short-form (7-bit) NID entries. | | | |
| ConL | 6:0 | R | 04h | N/A (Hard-coded) |
| | Number of NID entries in connection list. | | | |

### 7.11.3. PortG (NID = 10h): ConLstEntry0

| Reg | Byte 4 (Bits 31:24) | Byte 3 (Bits 23:16) | Byte 2 (Bits 15:8) | Byte 1 (Bits 7:0) |
|---|---|---|---|---|
| Set | | | | |
| Get | F0200h | | | |

| Field Name | Bits | R/W | Default | Reset |
|---|---|---|---|---|
| ConL3 | 31:24 | R | 19h | N/A (Hard-coded) |
| | DAC4 Converter widget (0x19) | | | |
| ConL2 | 23:16 | R | 1Eh | N/A (Hard-coded) |
| | MixerOutVol Selector widget (0x1E) | | | |
| ConL1Range | 14:8 | R | 1h | N/A (Hard-coded) |
| | 1 = ConL0..ConL1 defines a range of selectable inputs. | | | |


©2014 TEMPO SEMICONDCUTOR, INC..

| Field Name | Bits | R/W | Default | Reset |
|---|---|---|---|---|
| ConL1 | 15:8 | R | 18h | N/A (Hard-coded) |
| | DAC3 Converter widget (0x18) | | | |
| ConL0 | 7:0 | R | 15h | N/A (Hard-coded) |
| | DAC0 Converter widget (0x15) | | | |

### *7.11.4. PortG (NID = 10h): InAmpLeft*

| Reg | Byte 4 (Bits 31:24) | Byte 3 (Bits 23:16) | Byte 2 (Bits 15:8) | Byte 1 (Bits 7:0) |
|---|---|---|---|---|
| Set | | | | 360h |
| Get | B2000h | | | |

| Field Name | Bits | R/W | Default | Reset |
|---|---|---|---|---|
| Rsvd1 | 31:2 | R | 00000000h | N/A (Hard-coded) |
| | Reserved. | | | |
| Gain | 1:0 | RW | 0h | POR - DAFG - ULR |
| | Amp gain step number (see InAmpCap parameter pertaining to this widget). | | | |

### *7.11.5. PortG (NID = 10h): InAmpRight*

| Reg | Byte 4 (Bits 31:24) | Byte 3 (Bits 23:16) | Byte 2 (Bits 15:8) | Byte 1 (Bits 7:0) |
|---|---|---|---|---|
| Set | | | | 350h |
| Get | B0000h | | | |

| Field Name | Bits | R/W | Default | Reset |
|---|---|---|---|---|
| Rsvd1 | 31:2 | R | 00000000h | N/A (Hard-coded) |
| | Reserved. | | | |
| Gain | 1:0 | RW | 0h | POR - DAFG - ULR |
| | Amp gain step number (see InAmpCap parameter pertaining to this widget). | | | |


©2014 TEMPO SEMICONDCUTOR, INC..

### 7.11.6. PortG (NID = 10h): ConSelectCtrl

| Reg | Byte 4 (Bits 31:24) | Byte 3 (Bits 23:16) | Byte 2 (Bits 15:8) | Byte 1 (Bits 7:0) |
|---|---|---|---|---|
| Set | | | | 701h |
| Get | F0100h | | | |

| Field Name | Bits | R/W | Default | Reset |
|---|---|---|---|---|
| Rsvd | 31:2 | R | 00000000h | N/A (Hard-coded) |
| | Reserved. | | | |
| Index | 1:0 | RW | 0h | POR - DAFG - ULR |
| | Connection select control index. | | | |

### 7.11.7. PortG (NID = 10h): PwrState

| Reg | Byte 4 (Bits 31:24) | Byte 3 (Bits 23:16) | Byte 2 (Bits 15:8) | Byte 1 (Bits 7:0) |
|---|---|---|---|---|
| Set | | | | 705h |
| Get | F0500h | | | |

| Field Name | Bits | R/W | Default | Reset |
|---|---|---|---|---|
| Rsvd4 | 31:11 | R | 000000h | N/A (Hard-coded) |
| | Reserved. | | | |
| SettingsReset | 10 | R | 1h | POR - DAFG - ULR |
| | Indicates if any persistent settings in this Widget have been reset. Cleared by PwrState 'Get', or a 'Set' to any Verb in this Widget. | | | |
| Rsvd3 | 9 | R | 0h | N/A (Hard-coded) |
| | Reserved. | | | |
| Error | 8 | R | 0h | POR - DAFG - ULR |
| | Error indicator: 1 = cannot enter requested power state, 0 = no problem with requested power state. | | | |


©2014 TEMPO SEMICONDCUTOR, INC..

| Field Name | Bits | R/W | Default | Reset |
|---|---|---|---|---|
| Rsvd2 | 7:6 | R | 0h | N/A (Hard-coded) |
| | Reserved. | | | |
| Act | 5:4 | R | 3h | POR - DAFG - LR |
| | Actual power state of this widget. | | | |
| Rsvd1 | 3:2 | R | 0h | N/A (Hard-coded) |
| | Reserved. | | | |
| Set | 1:0 | RW | 0h | POR - DAFG - LR |
| | Current power state setting for this widget. | | | |

### *7.11.8. PortG (NID = 10h): PinWCntrl*

| Reg | Byte 4 (Bits 31:24) | Byte 3 (Bits 23:16) | Byte 2 (Bits 15:8) | Byte 1 (Bits 7:0) |
|---|---|---|---|---|
| Set | | | | 707h |
| Get | F0700h | | | |

| Field Name | Bits | R/W | Default | Reset |
|---|---|---|---|---|
| Rsvd2 | 31:7 | R | 000000h | N/A (Hard-coded) |
| | Reserved. | | | |
| OutEn | 6 | RW | 0h | POR - DAFG - ULR |
| | Output enable: 1 = enabled, 0 = disabled. | | | |
| InEn | 5 | RW | 1h | POR - DAFG - ULR |
| | Input enable: 1 = enabled, 0 = disabled. | | | |
| Rsvd1 | 4:0 | R | 00h | N/A (Hard-coded) |
| | Reserved. | | | |


©2014 TEMPO SEMICONDCUTOR, INC..

### 7.11.9. PortG (NID = 10h): UnsolResp

| Reg | Byte 4 (Bits 31:24) | Byte 3 (Bits 23:16) | Byte 2 (Bits 15:8) | Byte 1 (Bits 7:0) |
|---|---|---|---|---|
| Set | | | | 708h |
| Get | F0800h | | | |

| Field Name | Bits | R/W | Default | Reset |
|---|---|---|---|---|
| Rsvd2 | 31:8 | R | 000000h | N/A (Hard-coded) |
| | Reserved. | | | |
| En | 7 | RW | 0h | POR - DAFG - ULR |
| | Unsolicited response enable (also enables Wake events for this Widget): 1 = enabled, 0 = disabled. | | | |
| Rsvd1 | 6 | R | 0h | N/A (Hard-coded) |
| | Reserved. | | | |
| Tag | 5:0 | RW | 00h | POR - DAFG - ULR |
| | Software programmable field returned in top six bits (31:26) of every Unsolicited Response generated by this node. | | | |

### 7.11.10. PortG (NID = 10h): ChSense

| Reg | Byte 4 (Bits 31:24) | Byte 3 (Bits 23:16) | Byte 2 (Bits 15:8) | Byte 1 (Bits 7:0) |
|---|---|---|---|---|
| Set | | | | 709h |
| Get | F0900h | | | |

| Field Name | Bits | R/W | Default | Reset |
|---|---|---|---|---|
| PresDtct | 31 | R | 0h | POR |
| | Presence detection indicator: 1 = presence detected; 0 = presence not detected. | | | |
| Rsvd | 30:0 | R | 00000000h | N/A (Hard-coded) |
| | Reserved. | | | |


©2014 TEMPO SEMICONDCUTOR, INC..

### *7.11.11. PortG (NID = 10h): EAPDBTLLR*

| Reg | Byte 4 (Bits 31:24) | Byte 3 (Bits 23:16) | Byte 2 (Bits 15:8) | Byte 1 (Bits 7:0) |
|---|---|---|---|---|
| Set | | | | 70Ch |
| Get | F0C00h | | | |

| Field Name | Bits | R/W | Default | Reset |
|---|---|---|---|---|
| Rsvd2 | 31:2 | R | 00000000h | N/A (Hard-coded) |
| | Reserved. | | | |
| EAPD | 1 | RW | 1h | POR - DAFG - ULR |
| | EAPD control: 1 = set EAPD pin to 1 (powered) up if this pin is powered up, 0 = set EAPD pin to 0. | | | |
| Rsvd1 | 0 | R | 0h | N/A (Hard-coded) |
| | Reserved. | | | |

### *7.11.12. PortG (NID = 10h): ConfigDefault*

| Reg | Byte 4 (Bits 31:24) | Byte 3 (Bits 23:16) | Byte 2 (Bits 15:8) | Byte 1 (Bits 7:0) |
|---|---|---|---|---|
| Set | 71Fh | 71Eh | 71Dh | 71Ch |
| Get | F1F00h / F1E00h / F1D00h / F1C00h | | | |

| Field Name | Bits | R/W | Default | Reset |
|---|---|---|---|---|
| PortConnectivity | 31:30 | RW | 0h | POR |
| | Port connectivity:<br>0h = Port complex is connected to a jack<br>1h = No physical connection for port<br>2h = Fixed function device is attached<br>3h = Both jack and internal device attached (info in all other fields refers to integrated device, any presence detection refers to jack) | | | |


©2014 TEMPO SEMICONDCUTOR, INC..

| Field Name | Bits | R/W | Default | Reset |
|---|---|---|---|---|
| Location | 29:24 | RW | 01h | POR |
| | Location<br><br>Bits [5..4]:<br>0h = External on primary chassis<br>1h = Internal<br>2h = Separate chassis<br>3h = Other<br><br>Bits [3..0]:<br>0h = N/A<br>1h = Rear<br>2h = Front<br>3h = Left<br>4h = Right<br>5h = Top<br>6h = Bottom<br>7h-9h = Special<br>Ah-Fh = Reserved | | | |
| Device | 23:20 | RW | 0h | POR |
| | Default device:<br>0h = Line out<br>1h = Speaker<br>2h = HP out<br>3h = CD<br>4h = SPDIF Out<br>5h = Digital other out<br>6h = Modem line side<br>7h = Modem handset side<br>8h = Line in<br>9h = Aux<br>Ah = Mic in<br>Bh = Telephony<br>Ch = SPDIF In<br>Dh = Digital other in<br>Eh = Reserved<br>Fh = Other | | | |


©2014 TEMPO SEMICONDCUTOR, INC..

| Field Name | Bits | R/W | Default | Reset |
|---|---|---|---|---|
| ConnectionType | 19:16 | RW | 1h | POR |
| | Connection type:<br>0h = Unknown<br>1h = 1/8" stereo/mono<br>2h = 1/4" stereo/mono<br>3h = ATAPI internal<br>4h = RCA<br>5h = Optical<br>6h = Other digital<br>7h = Other analog<br>8h = Multichannel analog (DIN)<br>9h = XLR/Professional<br>Ah = RJ-11 (modem)<br>Bh = Combination<br>Ch-Eh = Reserved<br>Fh = Other | | | |
| Color | 15:12 | RW | 6h | POR |
| | Color:<br>0h = Unknown<br>1h = Black<br>2h = Grey<br>3h = Blue<br>4h = Green<br>5h = Red<br>6h = Orange<br>7h = Yellow<br>8h = Purple<br>9h = Pink<br>Ah-Dh = Reserved<br>Eh = White<br>Fh = Other | | | |
| Misc | 11:8 | RW | 0h | POR |
| | Miscellaneous:<br>Bits [3..1] = Reserved<br>Bit 0 = Jack detect override | | | |
| Association | 7:4 | RW | 3h | POR |
| | Default assocation. | | | |
| Sequence | 3:0 | RW | 1h | POR |
| | Sequence. | | | |


©2014 TEMPO SEMICONDCUTOR, INC..

## 7.18. PortH (NID = 11h): WCap

| Reg | Byte 4 (Bits 31:24) | Byte 3 (Bits 23:16) | Byte 2 (Bits 15:8) | Byte 1 (Bits 7:0) |
|---|---|---|---|---|
| Set | | | | |
| Get | F0009h | | | |

| Field Name | Bits | R/W | Default | Reset |
|---|---|---|---|---|
| Rsvd2 | 31:24 | R | 00h | N/A (Hard-coded) |
| | Reserved. | | | |
| Type | 23:20 | R | 4h | N/A (Hard-coded) |
| | Widget type:<br>0h = Out Converter<br>1h = In Converter<br>2h = Summing (Mixer)<br>3h = Selector (Mux)<br>4h = Pin Complex<br>5h = Power<br>6h = Volume Knob<br>7h = Beep Generator<br>8h-Eh = Reserved<br>Fh = Vendor Defined | | | |
| Delay | 19:16 | R | 0h | N/A (Hard-coded) |
| | Number of sample delays through widget. | | | |
| Rsvd1 | 15:12 | R | 0h | N/A (Hard-coded) |
| | Reserved. | | | |
| SwapCap | 11 | R | 0h | N/A (Hard-coded) |
| | Left/right swap support: 1 = yes, 0 = no. | | | |
| PwrCntrl | 10 | R | 1h | N/A (Hard-coded) |
| | Power state support: 1 = yes, 0 = no. | | | |
| Dig | 9 | R | 0h | N/A (Hard-coded) |
| | Digital stream support: 1 = yes (digital), 0 = no (analog). | | | |
| ConnList | 8 | R | 1h | N/A (Hard-coded) |
| | Connection list present: 1 = yes, 0 = no. | | | |


©2014 TEMPO SEMICONDCUTOR, INC..

| Field Name | Bits | R/W | Default | Reset |
|---|---|---|---|---|
| UnSolCap | 7 | R | 1h | N/A (Hard-coded) |
| | Unsolicited response support: 1 = yes, 0 = no. | | | |
| ProcWidget | 6 | R | 0h | N/A (Hard-coded) |
| | Processing state support: 1 = yes, 0 = no. | | | |
| Stripe | 5 | R | 0h | N/A (Hard-coded) |
| | Striping support: 1 = yes, 0 = no. | | | |
| FormatOvrd | 4 | R | 0h | N/A (Hard-coded) |
| | Stream format override: 1 = yes, 0 = no. | | | |
| AmpParOvrd | 3 | R | 0h | N/A (Hard-coded) |
| | Amplifier capabilities override: 1 = yes, no. | | | |
| OutAmpPrsnt | 2 | R | 0h | N/A (Hard-coded) |
| | Output amp present: 1 = yes, 0 = no. | | | |
| InAmpPrsnt | 1 | R | 1h | N/A (Hard-coded) |
| | Input amp present: 1 = yes, 0 = no. | | | |
| Stereo | 0 | R | 1h | N/A (Hard-coded) |
| | Stereo stream support: 1 = yes (stereo), 0 = no (mono). | | | |

### *7.18.1. PortH (NID = 11h): PinCap*

| Reg | Byte 4 (Bits 31:24) | Byte 3 (Bits 23:16) | Byte 2 (Bits 15:8) | Byte 1 (Bits 7:0) |
|---|---|---|---|---|
| Set | | | | |
| Get | F000Ch | | | |

| Field Name | Bits | R/W | Default | Reset |
|---|---|---|---|---|
| Rsvd2 | 31:17 | R | 0000h | N/A (Hard-coded) |
| | Reserved. | | | |


©2014 TEMPO SEMICONDCUTOR, INC..

| Field Name | Bits | R/W | Default | Reset |
|---|---|---|---|---|
| EapdCap | 16 | R | 1h | N/A (Hard-coded) |
| | EAPD support: 1 = yes, 0 = no. | | | |
| VrefCntrl | 15:8 | R | 00h | N/A (Hard-coded) |
| | Vref support:<br>bit 7 = Reserved<br>bit 6 = Reserved<br>bit 5 = 100% support (1 = yes, 0 = no)<br>bit 4 = 80% support (1 = yes, 0 = no)<br>bit 3 = Reserved<br>bit 2 = GND support (1 = yes, 0 = no)<br>bit 1 = 50% support (1 = yes, 0 = no)<br>bit 0 = Hi-Z support (1 = yes, 0 = no) | | | |
| Rsvd1 | 7 | R | 0h | N/A (Hard-coded) |
| | Reserved. | | | |
| BalancedIO | 6 | R | 0h | N/A (Hard-coded) |
| | Balanced I/O support: 1 = yes, 0 = no. | | | |
| InCap | 5 | R | 1h | N/A (Hard-coded) |
| | Input support: 1 = yes, 0 = no. | | | |
| OutCap | 4 | R | 1h | N/A (Hard-coded) |
| | Output support: 1 = yes, 0 = no. | | | |
| HdphDrvCap | 3 | R | 0h | N/A (Hard-coded) |
| | Headphone amp present: 1 = yes, 0 = no. | | | |
| PresDtctCap | 2 | R | 1h | N/A (Hard-coded) |
| | Presence detection support: 1 = yes, 0 = no. | | | |
| TrigRqd | 1 | R | 0h | N/A (Hard-coded) |
| | Trigger required for impedance sense: 1 = yes, 0 = no. | | | |
| ImpSenseCap | 0 | R | 0h | N/A (Hard-coded) |
| | Impedance sense support: 1 = yes, 0 = no. | | | |


©2014 TEMPO SEMICONDCUTOR, INC..

### 7.18.2. PortH (NID = 11h): ConLst

| Reg | Byte 4 (Bits 31:24) | Byte 3 (Bits 23:16) | Byte 2 (Bits 15:8) | Byte 1 (Bits 7:0) |
|---|---|---|---|---|
| Set | | | | |
| Get | F000Eh | | | |

| Field Name | Bits | R/W | Default | Reset |
|---|---|---|---|---|
| Rsvd | 31:8 | R | 000000h | N/A (Hard-coded) |
| | Reserved. | | | |
| LForm | 7 | R | 0h | N/A (Hard-coded) |
| | Connection list format: 1 = long-form (15-bit) NID entries, 0 = short-form (7-bit) NID entries. | | | |
| ConL | 6:0 | R | 04h | N/A (Hard-coded) |
| | Number of NID entries in connection list. | | | |

### 7.18.3. PortH (NID = 11h): ConLstEntry0

| Reg | Byte 4 (Bits 31:24) | Byte 3 (Bits 23:16) | Byte 2 (Bits 15:8) | Byte 1 (Bits 7:0) |
|---|---|---|---|---|
| Set | | | | |
| Get | F0200h | | | |

| Field Name | Bits | R/W | Default | Reset |
|---|---|---|---|---|
| ConL3 | 31:24 | R | 19h | N/A (Hard-coded) |
| | DAC4 Converter widget (0x19) | | | |
| ConL2 | 23:16 | R | 1Eh | N/A (Hard-coded) |
| | MixerOutVol Selector widget (0x1E) | | | |
| ConL1Range | 14:8 | R | 1h | N/A (Hard-coded) |
| | 1 = ConL0..ConL1 defines a range of selectable inputs. | | | |


©2014 TEMPO SEMICONDCUTOR, INC..

| Field Name | Bits | R/W | Default | Reset |
|---|---|---|---|---|
| ConL1 | 15:8 | R | 18h | N/A (Hard-coded) |
| | DAC3 Converter widget (0x18) | | | |
| ConL0 | 7:0 | R | 15h | N/A (Hard-coded) |
| | DAC0 Converter widget (0x15) | | | |

### *7.18.4. PortH (NID = 11h): InAmpLeft*

| Reg | Byte 4 (Bits 31:24) | Byte 3 (Bits 23:16) | Byte 2 (Bits 15:8) | Byte 1 (Bits 7:0) |
|---|---|---|---|---|
| Set | | | | 360h |
| Get | B2000h | | | |

| Field Name | Bits | R/W | Default | Reset |
|---|---|---|---|---|
| Rsvd1 | 31:2 | R | 00000000h | N/A (Hard-coded) |
| | Reserved. | | | |
| Gain | 1:0 | RW | 0h | POR - DAFG - ULR |
| | Amp gain step number (see InAmpCap parameter pertaining to this widget). | | | |

### *7.18.5. PortH (NID = 11h): InAmpRight*

| Reg | Byte 4 (Bits 31:24) | Byte 3 (Bits 23:16) | Byte 2 (Bits 15:8) | Byte 1 (Bits 7:0) |
|---|---|---|---|---|
| Set | | | | 350h |
| Get | B0000h | | | |

| Field Name | Bits | R/W | Default | Reset |
|---|---|---|---|---|
| Rsvd1 | 31:2 | R | 00000000h | N/A (Hard-coded) |
| | Reserved. | | | |
| Gain | 1:0 | RW | 0h | POR - DAFG - ULR |
| | Amp gain step number (see InAmpCap parameter pertaining to this widget). | | | |


©2014 TEMPO SEMICONDCUTOR, INC..

### 7.18.6. PortH (NID = 11h): ConSelectCtrl

| Reg | Byte 4 (Bits 31:24) | Byte 3 (Bits 23:16) | Byte 2 (Bits 15:8) | Byte 1 (Bits 7:0) |
|---|---|---|---|---|
| Set | | | | 701h |
| Get | F0100h | | | |

| Field Name | Bits | R/W | Default | Reset |
|---|---|---|---|---|
| Rsvd | 31:2 | R | 00000000h | N/A (Hard-coded) |
| | Reserved. | | | |
| Index | 1:0 | RW | 0h | POR - DAFG - ULR |
| | Connection select control index. | | | |

### 7.18.7. PortH (NID = 11h): PwrState

| Reg | Byte 4 (Bits 31:24) | Byte 3 (Bits 23:16) | Byte 2 (Bits 15:8) | Byte 1 (Bits 7:0) |
|---|---|---|---|---|
| Set | | | | 705h |
| Get | F0500h | | | |

| Field Name | Bits | R/W | Default | Reset |
|---|---|---|---|---|
| Rsvd4 | 31:11 | R | 000000h | N/A (Hard-coded) |
| | Reserved. | | | |
| SettingsReset | 10 | R | 1h | POR - DAFG - ULR |
| | Indicates if any persistent settings in this Widget have been reset. Cleared by PwrState 'Get', or a 'Set' to any Verb in this Widget. | | | |
| Rsvd3 | 9 | R | 0h | N/A (Hard-coded) |
| | Reserved. | | | |
| Error | 8 | R | 0h | POR - DAFG - ULR |
| | Error indicator: 1 = cannot enter requested power state, 0 = no problem with requested power state. | | | |


©2014 TEMPO SEMICONDCUTOR, INC..

| Field Name | Bits | R/W | Default | Reset |
|---|---|---|---|---|
| Rsvd2 | 7:6 | R | 0h | N/A (Hard-coded) |
| | Reserved. | | | |
| Act | 5:4 | R | 3h | POR - DAFG - LR |
| | Actual power state of this widget. | | | |
| Rsvd1 | 3:2 | R | 0h | N/A (Hard-coded) |
| | Reserved. | | | |
| Set | 1:0 | RW | 0h | POR - DAFG - LR |
| | Current power state setting for this widget. | | | |

### *7.18.8. PortH (NID = 11h): PinWCntrl*

| Reg | Byte 4 (Bits 31:24) | Byte 3 (Bits 23:16) | Byte 2 (Bits 15:8) | Byte 1 (Bits 7:0) |
|---|---|---|---|---|
| Set | | | | 707h |
| Get | F0700h | | | |

| Field Name | Bits | R/W | Default | Reset |
|---|---|---|---|---|
| Rsvd2 | 31:7 | R | 000000h | N/A (Hard-coded) |
| | Reserved. | | | |
| OutEn | 6 | RW | 0h | POR - DAFG - ULR |
| | Output enable: 1 = enabled, 0 = disabled. | | | |
| InEn | 5 | RW | 1h | POR - DAFG - ULR |
| | Input enable: 1 = enabled, 0 = disabled. | | | |
| Rsvd1 | 4:0 | R | 00h | N/A (Hard-coded) |
| | Reserved. | | | |


©2014 TEMPO SEMICONDCUTOR, INC..

### *7.18.9. PortH (NID = 11h): UnsolResp*

| Reg | Byte 4 (Bits 31:24) | Byte 3 (Bits 23:16) | Byte 2 (Bits 15:8) | Byte 1 (Bits 7:0) |
|---|---|---|---|---|
| Set | | | | 708h |
| Get | F0800h | | | |

| Field Name | Bits | R/W | Default | Reset |
|---|---|---|---|---|
| Rsvd2 | 31:8 | R | 000000h | N/A (Hard-coded) |
| | Reserved. | | | |
| En | 7 | RW | 0h | POR - DAFG - ULR |
| | Unsolicited response enable (also enables Wake events for this Widget): 1 = enabled, 0 = disabled. | | | |
| Rsvd1 | 6 | R | 0h | N/A (Hard-coded) |
| | Reserved. | | | |
| Tag | 5:0 | RW | 00h | POR - DAFG - ULR |
| | Software programmable field returned in top six bits (31:26) of every Unsolicited Response generated by this node. | | | |

### *7.18.10. PortH (NID = 11h): ChSense*

| Reg | Byte 4 (Bits 31:24) | Byte 3 (Bits 23:16) | Byte 2 (Bits 15:8) | Byte 1 (Bits 7:0) |
|---|---|---|---|---|
| Set | | | | 709h |
| Get | F0900h | | | |

| Field Name | Bits | R/W | Default | Reset |
|---|---|---|---|---|
| PresDtct | 31 | R | 0h | POR |
| | Presence detection indicator: 1 = presence detected; 0 = presence not detected. | | | |
| Rsvd | 30:0 | R | 00000000h | N/A (Hard-coded) |
| | Reserved. | | | |


©2014 TEMPO SEMICONDCUTOR, INC..

### *7.18.11. PortH (NID = 11h): EAPDBTLLR*

| Reg | Byte 4 (Bits 31:24) | Byte 3 (Bits 23:16) | Byte 2 (Bits 15:8) | Byte 1 (Bits 7:0) |
|---|---|---|---|---|
| Set | | | | 70Ch |
| Get | F0C00h | | | |

| Field Name | Bits | R/W | Default | Reset |
|---|---|---|---|---|
| Rsvd2 | 31:2 | R | 00000000h | N/A (Hard-coded) |
| | Reserved. | | | |
| EAPD | 1 | RW | 1h | POR - DAFG - ULR |
| | EAPD control: 1 = set EAPD pin to 1 (powered) up if this pin is powered up, 0 = set EAPD pin to 0. | | | |
| Rsvd1 | 0 | R | 0h | N/A (Hard-coded) |
| | Reserved. | | | |

### *7.18.12. PortH (NID = 11h): ConfigDefault*

| Reg | Byte 4 (Bits 31:24) | Byte 3 (Bits 23:16) | Byte 2 (Bits 15:8) | Byte 1 (Bits 7:0) |
|---|---|---|---|---|
| Set | 71Fh | 71Eh | 71Dh | 71Ch |
| Get | F1F00h / F1E00h / F1D00h / F1C00h | | | |

| Field Name | Bits | R/W | Default | Reset |
|---|---|---|---|---|
| PortConnectivity | 31:30 | RW | 0h | POR |
| | Port connectivity:<br>0h = Port complex is connected to a jack<br>1h = No physical connection for port<br>2h = Fixed function device is attached<br>3h = Both jack and internal device attached (info in all other fields refers to integrated device, any presence detection refers to jack) | | | |


©2014 TEMPO SEMICONDCUTOR, INC..

| Field Name | Bits | R/W | Default | Reset |
|---|---|---|---|---|
| Location | 29:24 | RW | 01h | POR |
| | Location<br><br>Bits [5..4]:<br>0h = External on primary chassis<br>1h = Internal<br>2h = Separate chassis<br>3h = Other<br><br>Bits [3..0]:<br>0h = N/A<br>1h = Rear<br>2h = Front<br>3h = Left<br>4h = Right<br>5h = Top<br>6h = Bottom<br>7h-9h = Special<br>Ah-Fh = Reserved | | | |
| Device | 23:20 | RW | 0h | POR |
| | Default device:<br>0h = Line out<br>1h = Speaker<br>2h = HP out<br>3h = CD<br>4h = SPDIF Out<br>5h = Digital other out<br>6h = Modem line side<br>7h = Modem handset side<br>8h = Line in<br>9h = Aux<br>Ah = Mic in<br>Bh = Telephony<br>Ch = SPDIF In<br>Dh = Digital other in<br>Eh = Reserved<br>Fh = Other | | | |


©2014 TEMPO SEMICONDCUTOR, INC..

| Field Name | Bits | R/W | Default | Reset |
|---|---|---|---|---|
| ConnectionType | 19:16 | RW | 1h | POR |
| | Connection type:<br>0h = Unknown<br>1h = 1/8" stereo/mono<br>2h = 1/4" stereo/mono<br>3h = ATAPI internal<br>4h = RCA<br>5h = Optical<br>6h = Other digital<br>7h = Other analog<br>8h = Multichannel analog (DIN)<br>9h = XLR/Professional<br>Ah = RJ-11 (modem)<br>Bh = Combination<br>Ch-Eh = Reserved<br>Fh = Other | | | |
| Color | 15:12 | RW | 2h | POR |
| | Color:<br>0h = Unknown<br>1h = Black<br>2h = Grey<br>3h = Blue<br>4h = Green<br>5h = Red<br>6h = Orange<br>7h = Yellow<br>8h = Purple<br>9h = Pink<br>Ah-Dh = Reserved<br>Eh = White<br>Fh = Other | | | |
| Misc | 11:8 | RW | 0h | POR |
| | Miscellaneous:<br>Bits [3..1] = Reserved<br>Bit 0 = Jack detect override | | | |
| Association | 7:4 | RW | 3h | POR |
| | Default assocation. | | | |
| Sequence | 3:0 | RW | 4h | POR |
| | Sequence. | | | |


©2014 TEMPO SEMICONDCUTOR, INC..

## 7.19. CD (NID = 12h): WCap

| Reg | Byte 4 (Bits 31:24) | Byte 3 (Bits 23:16) | Byte 2 (Bits 15:8) | Byte 1 (Bits 7:0) |
|---|---|---|---|---|
| Set | | | | |
| Get | F0009h | | | |

| Field Name | Bits | R/W | Default | Reset |
|---|---|---|---|---|
| Rsvd2 | 31:24 | R | 00h | N/A (Hard-coded) |
| | Reserved. | | | |
| Type | 23:20 | R | 4h | N/A (Hard-coded) |
| | Widget type:<br>0h = Out Converter<br>1h = In Converter<br>2h = Summing (Mixer)<br>3h = Selector (Mux)<br>4h = Pin Complex<br>5h = Power<br>6h = Volume Knob<br>7h = Beep Generator<br>8h-Eh = Reserved<br>Fh = Vendor Defined | | | |
| Delay | 19:16 | R | 0h | N/A (Hard-coded) |
| | Number of sample delays through widget. | | | |
| Rsvd1 | 15:12 | R | 0h | N/A (Hard-coded) |
| | Reserved. | | | |
| SwapCap | 11 | R | 0h | N/A (Hard-coded) |
| | Left/right swap support: 1 = yes, 0 = no. | | | |
| PwrCntrl | 10 | R | 1h | N/A (Hard-coded) |
| | Power state support: 1 = yes, 0 = no. | | | |
| DigitalStrm | 9 | R | 0h | N/A (Hard-coded) |
| | Digital stream support: 1 = yes (digital), 0 = no (analog). | | | |
| ConnList | 8 | R | 0h | N/A (Hard-coded) |
| | Connection list present: 1 = yes, 0 = no. | | | |


©2014 TEMPO SEMICONDCUTOR, INC..

| Field Name | Bits | R/W | Default | Reset |
|---|---|---|---|---|
| UnsolCap | 7 | R | 1h | N/A (Hard-coded) |
| | Unsolicited response support: 1 = yes, 0 = no. | | | |
| ProcWidget | 6 | R | 0h | N/A (Hard-coded) |
| | Processing state support: 1 = yes, 0 = no. | | | |
| Stripe | 5 | R | 0h | N/A (Hard-coded) |
| | Striping support: 1 = yes, 0 = no. | | | |
| FormatOvrd | 4 | R | 0h | N/A (Hard-coded) |
| | Stream format override: 1 = yes, 0 = no. | | | |
| AmpParOvrd | 3 | R | 0h | N/A (Hard-coded) |
| | Amplifier capabilities override: 1 = yes, no. | | | |
| OutAmpPrsnt | 2 | R | 0h | N/A (Hard-coded) |
| | Output amp present: 1 = yes, 0 = no. | | | |
| InAmpPrsnt | 1 | R | 0h | N/A (Hard-coded) |
| | Input amp present: 1 = yes, 0 = no. | | | |
| Stereo | 0 | R | 1h | N/A (Hard-coded) |
| | Stereo stream support: 1 = yes (stereo), 0 = no (mono). | | | |

### *7.19.1. CD (NID = 12h): PinCap*

| Reg | Byte 4 (Bits 31:24) | Byte 3 (Bits 23:16) | Byte 2 (Bits 15:8) | Byte 1 (Bits 7:0) |
|---|---|---|---|---|
| Set | | | | |
| Get | F000Ch | | | |

| Field Name | Bits | R/W | Default | Reset |
|---|---|---|---|---|
| Rsvd2 | 31:17 | R | 0000h | N/A (Hard-coded) |
| | Reserved. | | | |


©2014 TEMPO SEMICONDCUTOR, INC..

| Field Name | Bits | R/W | Default | Reset |
|---|---|---|---|---|
| EapdCap | 16 | R | 0h | N/A (Hard-coded) |
| | EAPD support: 1 = yes, 0 = no. | | | |
| VRefCntrl | 15:8 | R | 00h | N/A (Hard-coded) |
| | Vref support:<br>bit 7 = Reserved<br>bit 6 = Reserved<br>bit 5 = 100% support (1 = yes, 0 = no)<br>bit 4 = 80% support (1 = yes, 0 = no)<br>bit 3 = Reserved<br>bit 2 = GND support (1 = yes, 0 = no)<br>bit 1 = 50% support (1 = yes, 0 = no)<br>bit 0 = Hi-Z support (1 = yes, 0 = no) | | | |
| Rsvd1 | 7 | R | 0h | N/A (Hard-coded) |
| | Reserved. | | | |
| BalancedIO | 6 | R | 0h | N/A (Hard-coded) |
| | Balanced I/O support: 1 = yes, 0 = no. | | | |
| InCap | 5 | R | 1h | N/A (Hard-coded) |
| | Input support: 1 = yes, 0 = no. | | | |
| OutCap | 4 | R | 0h | N/A (Hard-coded) |
| | Output support: 1 = yes, 0 = no. | | | |
| HPhnDrvCap | 3 | R | 0h | N/A (Hard-coded) |
| | Headphone amp present: 1 = yes, 0 = no. | | | |
| PresDtctCap | 2 | R | 0h | N/A (Hard-coded) |
| | Presence detection support: 1 = yes, 0 = no. | | | |
| TrigRqd | 1 | R | 0h | N/A (Hard-coded) |
| | Trigger required for impedance sense: 1 = yes, 0 = no. | | | |
| ImpSenseCap | 0 | R | 0h | N/A (Hard-coded) |
| | Impedance sense support: 1 = yes, 0 = no. | | | |


©2014 TEMPO SEMICONDCUTOR, INC..

### *7.19.2. CD (NID = 12h): PwrState*

| Reg | Byte 4 (Bits 31:24) | Byte 3 (Bits 23:16) | Byte 2 (Bits 15:8) | Byte 1 (Bits 7:0) |
|---|---|---|---|---|
| Set | | | | 705h |
| Get | F0500h | | | |

| Field Name | Bits | R/W | Default | Reset |
|---|---|---|---|---|
| Rsvd4 | 31:11 | R | 000000h | N/A (Hard-coded) |
| | Reserved. | | | |
| SettingsReset | 10 | R | 1h | POR - DAFG - ULR |
| | Indicates if any persistent settings in this Widget have been reset. Cleared by PwrState 'Get', or a 'Set' to any Verb in this Widget. | | | |
| Rsvd3 | 9 | R | 0h | N/A (Hard-coded) |
| | Reserved. | | | |
| Error | 8 | R | 0h | POR - DAFG - ULR |
| | Error indicator: 1 = cannot enter requested power state, 0 = no problem with requested power state. | | | |
| Rsvd2 | 7:6 | R | 0h | N/A (Hard-coded) |
| | Reserved. | | | |
| Act | 5:4 | R | 3h | POR - DAFG - LR |
| | Actual power state of this widget. | | | |
| Rsvd1 | 3:2 | R | 0h | N/A (Hard-coded) |
| | Reserved. | | | |
| Set | 1:0 | RW | 0h | POR - DAFG - LR |
| | Current power state setting for this widget. | | | |

### *7.19.3. CD (NID = 12h): PinWCntrl*

| Reg | Byte 4 (Bits 31:24) | Byte 3 (Bits 23:16) | Byte 2 (Bits 15:8) | Byte 1 (Bits 7:0) |
|---|---|---|---|---|
| Set | | | | 707h |


©2014 TEMPO SEMICONDCUTOR, INC..

### 7.19.3. CD (NID = 12h): PinWCntrl

| Reg | Byte 4 (Bits 31:24) | Byte 3 (Bits 23:16) | Byte 2 (Bits 15:8) | Byte 1 (Bits 7:0) |
|---|---|---|---|---|
| Get | F0700h | | | |

| Field Name | Bits | R/W | Default | Reset |
|---|---|---|---|---|
| Rsvd2 | 31:6 | R | 0000000h | N/A (Hard-coded) |
| | Reserved. | | | |
| InEn | 5 | RW | 0h | POR - DAFG - ULR |
| | Input enable: 1 = enabled, 0 = disabled. | | | |
| Rsvd1 | 4:0 | R | 00h | N/A (Hard-coded) |
| | Reserved. | | | |

### 7.19.4. CD (NID = 12h): ConfigDefault

| Reg | Byte 4 (Bits 31:24) | Byte 3 (Bits 23:16) | Byte 2 (Bits 15:8) | Byte 1 (Bits 7:0) |
|---|---|---|---|---|
| Set | 71Fh | 71Eh | 71Dh | 71Ch |
| Get | F1F00h / F1E00h / F1D00h / F1C00h | | | |

| Field Name | Bits | R/W | Default | Reset |
|---|---|---|---|---|
| PortConnectivity | 31:30 | RW | 2h | POR |
| | Port connectivity:<br>0h = Port complex is connected to a jack<br>1h = No physical connection for port<br>2h = Fixed function device is attached<br>3h = Both jack and internal device attached (info in all other fields refers to integrated device, any presence detection refers to jack) | | | |


©2014 TEMPO SEMICONDCUTOR, INC..

| Field Name | Bits | R/W | Default | Reset |
|---|---|---|---|---|
| Location | 29:24 | RW | 19h | POR |
| | Location<br><br>Bits [5..4]:<br>0h = External on primary chassis<br>1h = Internal<br>2h = Separate chassis<br>3h = Other<br><br>Bits [3..0]:<br>0h = N/A<br>1h = Rear<br>2h = Front<br>3h = Left<br>4h = Right<br>5h = Top<br>6h = Bottom<br>7h-9h = Special<br>Ah-Fh = Reserved | | | |
| Device | 23:20 | RW | 3h | POR |
| | Default device:<br>0h = Line out<br>1h = Speaker<br>2h = HP out<br>3h = CD<br>4h = SPDIF Out<br>5h = Digital other out<br>6h = Modem line side<br>7h = Modem handset side<br>8h = Line in<br>9h = Aux<br>Ah = Mic in<br>Bh = Telephony<br>Ch = SPDIF In<br>Dh = Digital other in<br>Eh = Reserved<br>Fh = Other | | | |


©2014 TEMPO SEMICONDCUTOR, INC..

| Field Name | Bits | R/W | Default | Reset |
|---|---|---|---|---|
| ConnectionType | 19:16 | RW | 3h | POR |
| | Connection type:<br>0h = Unknown<br>1h = 1/8" stereo/mono<br>2h = 1/4" stereo/mono<br>3h = ATAPI internal<br>4h = RCA<br>5h = Optical<br>6h = Other digital<br>7h = Other analog<br>8h = Multichannel analog (DIN)<br>9h = XLR/Professional<br>Ah = RJ-11 (modem)<br>Bh = Combination<br>Ch-Eh = Reserved<br>Fh = Other | | | |
| Color | 15:12 | RW | 0h | POR |
| | Color:<br>0h = Unknown<br>1h = Black<br>2h = Grey<br>3h = Blue<br>4h = Green<br>5h = Red<br>6h = Orange<br>7h = Yellow<br>8h = Purple<br>9h = Pink<br>Ah-Dh = Reserved<br>Eh = White<br>Fh = Other | | | |
| Misc | 11:8 | RW | 1h | POR |
| | Miscellaneous:<br>Bits [3..1] = Reserved<br>Bit 0 = Jack detect override | | | |
| Association | 7:4 | RW | 4h | POR |
| | Default assocation. | | | |
| Sequence | 3:0 | RW | 1h | POR |
| | Sequence. | | | |


©2014 TEMPO SEMICONDCUTOR, INC..

## 7.20. DMic0 (NID = 13h): WCap

| Reg | Byte 4 (Bits 31:24) | Byte 3 (Bits 23:16) | Byte 2 (Bits 15:8) | Byte 1 (Bits 7:0) |
|---|---|---|---|---|
| Set | | | | |
| Get | F0009h | | | |

| Field Name | Bits | R/W | Default | Reset |
|---|---|---|---|---|
| Rsvd2 | 31:24 | R | 00h | N/A (Hard-coded) |
| | Reserved. | | | |
| Type | 23:20 | R | Fh | N/A (Hard-coded) |
| | Widget type:<br>0h = Out Converter<br>1h = In Converter<br>2h = Summing (Mixer)<br>3h = Selector (Mux)<br>4h = Pin Complex<br>5h = Power<br>6h = Volume Knob<br>7h = Beep Generator<br>8h-Eh = Reserved<br>Fh = Vendor Defined | | | |
| Delay | 19:16 | R | 0h | N/A (Hard-coded) |
| | Number of sample delays through widget. | | | |
| Rsvd1 | 15:12 | R | 0h | N/A (Hard-coded) |
| | Reserved. | | | |
| SwapCap | 11 | R | 0h | N/A (Hard-coded) |
| | Left/right swap support: 1 = yes, 0 = no. | | | |
| PwrCntrl | 10 | R | 0h | N/A (Hard-coded) |
| | Power state support: 1 = yes, 0 = no. | | | |
| DigitalStrm | 9 | R | 0h | N/A (Hard-coded) |
| | Digital stream support: 1 = yes (digital), 0 = no (analog). | | | |
| ConnList | 8 | R | 0h | N/A (Hard-coded) |
| | Connection list present: 1 = yes, 0 = no. | | | |


©2014 TEMPO SEMICONDCUTOR, INC..

| Field Name | Bits | R/W | Default | Reset |
|---|---|---|---|---|
| UnsolCap | 7 | R | 0h | N/A (Hard-coded) |
| | Unsolicited response support: 1 = yes, 0 = no. | | | |
| ProcWidget | 6 | R | 0h | N/A (Hard-coded) |
| | Processing state support: 1 = yes, 0 = no. | | | |
| Stripe | 5 | R | 0h | N/A (Hard-coded) |
| | Striping support: 1 = yes, 0 = no. | | | |
| FormatOvrd | 4 | R | 0h | N/A (Hard-coded) |
| | Stream format override: 1 = yes, 0 = no. | | | |
| AmpParOvrd | 3 | R | 0h | N/A (Hard-coded) |
| | Amplifier capabilities override: 1 = yes, no. | | | |
| OutAmpPrsnt | 2 | R | 0h | N/A (Hard-coded) |
| | Output amp present: 1 = yes, 0 = no. | | | |
| InAmpPrsnt | 1 | R | 0h | N/A (Hard-coded) |
| | Input amp present: 1 = yes, 0 = no. | | | |
| Stereo | 0 | R | 0h | N/A (Hard-coded) |
| | Stereo stream support: 1 = yes (stereo), 0 = no (mono). | | | |

### *7.20.1. DMic0 (NID = 13h): PinCap*

| Reg | Byte 4 (Bits 31:24) | Byte 3 (Bits 23:16) | Byte 2 (Bits 15:8) | Byte 1 (Bits 7:0) |
|---|---|---|---|---|
| Set | | | | |
| Get | F000Ch | | | |

| Field Name | Bits | R/W | Default | Reset |
|---|---|---|---|---|
| Rsvd2 | 31:17 | R | 0000h | N/A (Hard-coded) |
| | Reserved. | | | |


©2014 TEMPO SEMICONDCUTOR, INC..

| Field Name | Bits | R/W | Default | Reset |
|---|---|---|---|---|
| EapdCap | 16 | R | 0h | N/A (Hard-coded) |
| | EAPD support: 1 = yes, 0 = no. | | | |
| VRefCntrl | 15:8 | R | 00h | N/A (Hard-coded) |
| | Vref support:<br>bit 7 = Reserved<br>bit 6 = Reserved<br>bit 5 = 100% support (1 = yes, 0 = no)<br>bit 4 = 80% support (1 = yes, 0 = no)<br>bit 3 = Reserved<br>bit 2 = GND support (1 = yes, 0 = no)<br>bit 1 = 50% support (1 = yes, 0 = no)<br>bit 0 = Hi-Z support (1 = yes, 0 = no) | | | |
| Rsvd1 | 7 | R | 0h | N/A (Hard-coded) |
| | Reserved. | | | |
| BalancedIO | 6 | R | 0h | N/A (Hard-coded) |
| | Balanced I/O support: 1 = yes, 0 = no. | | | |
| InCap | 5 | R | 1h | N/A (Hard-coded) |
| | Input support: 1 = yes, 0 = no. | | | |
| OutCap | 4 | R | 0h | N/A (Hard-coded) |
| | Output support: 1 = yes, 0 = no. | | | |
| HPhnDrvCap | 3 | R | 0h | N/A (Hard-coded) |
| | Headphone amp present: 1 = yes, 0 = no. | | | |
| PresDtctCap | 2 | R | 0h | N/A (Hard-coded) |
| | Presence detection support: 1 = yes, 0 = no. | | | |
| TrigRqd | 1 | R | 0h | N/A (Hard-coded) |
| | Trigger required for impedance sense: 1 = yes, 0 = no. | | | |
| ImpSenseCap | 0 | R | 0h | N/A (Hard-coded) |
| | Impedance sense support: 1 = yes, 0 = no. | | | |


©2014 TEMPO SEMICONDCUTOR, INC..

### 7.20.2. DMic0 (NID = 13h): InAmpLeft

| Reg | Byte 4 (Bits 31:24) | Byte 3 (Bits 23:16) | Byte 2 (Bits 15:8) | Byte 1 (Bits 7:0) |
|---|---|---|---|---|
| Set | | | | 360h |
| Get | B2000h | | | |

| Field Name | Bits | R/W | Default | Reset |
|---|---|---|---|---|
| Rsvd1 | 31:2 | R | 00000000h | N/A (Hard-coded) |
| | Reserved. | | | |
| Gain | 1:0 | RW | 0h | POR - DAFG - ULR |
| | Amp gain step number (see InAmpCap parameter pertaining to this widget). | | | |

### 7.20.3. DMic0 (NID = 13h): InAmpRight

| Reg | Byte 4 (Bits 31:24) | Byte 3 (Bits 23:16) | Byte 2 (Bits 15:8) | Byte 1 (Bits 7:0) |
|---|---|---|---|---|
| Set | | | | 350h |
| Get | B0000h | | | |

| Field Name | Bits | R/W | Default | Reset |
|---|---|---|---|---|
| Rsvd1 | 31:2 | R | 00000000h | N/A (Hard-coded) |
| | Reserved. | | | |
| Gain | 1:0 | RW | 0h | POR - DAFG - ULR |
| | Amp gain step number (see InAmpCap parameter pertaining to this widget). | | | |

### 7.20.4. DMic0 (NID = 13h): PwrState

| Reg | Byte 4 (Bits 31:24) | Byte 3 (Bits 23:16) | Byte 2 (Bits 15:8) | Byte 1 (Bits 7:0) |
|---|---|---|---|---|
| Set | | | | 705h |
| Get | F0500h | | | |


©2014 TEMPO SEMICONDCUTOR, INC..

| Field Name | Bits | R/W | Default | Reset |
|---|---|---|---|---|
| Rsvd4 | 31:11 | R | 000000h | N/A (Hard-coded) |
| | Reserved. | | | |
| SettingsReset | 10 | R | 1h | POR - DAFG - ULR |
| | Indicates if any persistent settings in this Widget have been reset. Cleared by PwrState 'Get', or a 'Set' to any Verb in this Widget. | | | |
| Rsvd3 | 9 | R | 0h | N/A (Hard-coded) |
| | Reserved. | | | |
| Error | 8 | R | 0h | POR - DAFG - ULR |
| | Error indicator: 1 = cannot enter requested power state, 0 = no problem with requested power state. | | | |
| Rsvd2 | 7:6 | R | 0h | N/A (Hard-coded) |
| | Reserved. | | | |
| Act | 5:4 | R | 3h | POR - DAFG - LR |
| | Actual power state of this widget. | | | |
| Rsvd1 | 3:2 | R | 0h | N/A (Hard-coded) |
| | Reserved. | | | |
| Set | 1:0 | RW | 0h | POR - DAFG - LR |
| | Current power state setting for this widget. | | | |

### *7.20.5. DMic0 (NID = 13h): PinWCntrl*

| Reg | Byte 4 (Bits 31:24) | Byte 3 (Bits 23:16) | Byte 2 (Bits 15:8) | Byte 1 (Bits 7:0) |
|---|---|---|---|---|
| Set | | | | 707h |
| Get | F0700h | | | |


©2014 TEMPO SEMICONDCUTOR, INC..

| Field Name | Bits | R/W | Default | Reset |
|---|---|---|---|---|
| Rsvd2 | 31:6 | R | 0000000h | N/A (Hard-coded) |
| | Reserved. | | | |
| InEn | 5 | RW | 0h | POR - DAFG - ULR |
| | Input enable: 1 = enabled, 0 = disabled. | | | |
| Rsvd1 | 4:0 | R | 00h | N/A (Hard-coded) |
| | Reserved. | | | |

### 7.20.6. DMic0 (NID = 13h): UnsolResp

| Reg | Byte 4 (Bits 31:24) | Byte 3 (Bits 23:16) | Byte 2 (Bits 15:8) | Byte 1 (Bits 7:0) |
|---|---|---|---|---|
| Set | | | | 708h |
| Get | F0800h | | | |

| Field Name | Bits | R/W | Default | Reset |
|---|---|---|---|---|
| Rsvd2 | 31:8 | R | 000000h | N/A (Hard-coded) |
| | Reserved. | | | |
| En | 7 | RW | 0h | POR - DAFG - ULR |
| | Unsolicited response enable (also enables Wake events for this Widget): 1 = enabled, 0 = disabled. | | | |
| Rsvd1 | 6 | R | 0h | N/A (Hard-coded) |
| | Reserved. | | | |
| Tag | 5:0 | RW | 00h | POR - DAFG - ULR |
| | Software programmable field returned in top six bits (31:26) of every Unsolicited Response generated by this node. | | | |

### 7.20.7. DMic0 (NID = 13h): ConfigDefault

| Reg | Byte 4 (Bits 31:24) | Byte 3 (Bits 23:16) | Byte 2 (Bits 15:8) | Byte 1 (Bits 7:0) |
|---|---|---|---|---|
| Set | 71Fh | 71Eh | 71Dh | 71Ch |


©2014 TEMPO SEMICONDCUTOR, INC..

### *7.20.7. DMic0 (NID = 13h): ConfigDefault*

| Reg | Byte 4 (Bits 31:24) | Byte 3 (Bits 23:16) | Byte 2 (Bits 15:8) | Byte 1 (Bits 7:0) |
|---|---|---|---|---|
| Get | F1F00h / F1E00h / F1D00h / F1C00h | | | |

| Field Name | Bits | R/W | Default | Reset |
|---|---|---|---|---|
| PortConnectivity | 31:30 | RW | 2h | POR |
| | Port connectivity:<br>0h = Port complex is connected to a jack<br>1h = No physical connection for port<br>2h = Fixed function device is attached<br>3h = Both jack and internal device attached (info in all other fields refers to integrated device, any presence detection refers to jack) | | | |
| Location | 29:24 | RW | 10h | POR |
| | Location<br><br>Bits [5..4]:<br>0h = External on primary chassis<br>1h = Internal<br>2h = Separate chassis<br>3h = Other<br><br>Bits [3..0]:<br>0h = N/A<br>1h = Rear<br>2h = Front<br>3h = Left<br>4h = Right<br>5h = Top<br>6h = Bottom<br>7h-9h = Special<br>Ah-Fh = Reserved | | | |


©2014 TEMPO SEMICONDCUTOR, INC..

| Field Name | Bits | R/W | Default | Reset |
|---|---|---|---|---|
| Device | 23:20 | RW | Ah | POR |
| | Default device:<br>0h = Line out<br>1h = Speaker<br>2h = HP out<br>3h = CD<br>4h = SPDIF Out<br>5h = Digital other out<br>6h = Modem line side<br>7h = Modem handset side<br>8h = Line in<br>9h = Aux<br>Ah = Mic in<br>Bh = Telephony<br>Ch = SPDIF In<br>Dh = Digital other in<br>Eh = Reserved<br>Fh = Other | | | |
| ConnectionType | 19:16 | RW | 3h | POR |
| | Connection type:<br>0h = Unknown<br>1h = 1/8" stereo/mono<br>2h = 1/4" stereo/mono<br>3h = ATAPI internal<br>4h = RCA<br>5h = Optical<br>6h = Other digital<br>7h = Other analog<br>8h = Multichannel analog (DIN)<br>9h = XLR/Professional<br>Ah = RJ-11 (modem)<br>Bh = Combination<br>Ch-Eh = Reserved<br>Fh = Other | | | |


©2014 TEMPO SEMICONDCUTOR, INC..

| Field Name | Bits | R/W | Default | Reset |
|---|---|---|---|---|
| Color | 15:12 | RW | 0h | POR |
| | Color:<br>0h = Unknown<br>1h = Black<br>2h = Grey<br>3h = Blue<br>4h = Green<br>5h = Red<br>6h = Orange<br>7h = Yellow<br>8h = Purple<br>9h = Pink<br>Ah-Dh = Reserved<br>Eh = White<br>Fh = Other | | | |
| Misc | 11:8 | RW | 1h | POR |
| | Miscellaneous:<br>Bits [3..1] = Reserved<br>Bit 0 = Jack detect override | | | |
| Association | 7:4 | RW | 4h | POR |
| | Default assocation. | | | |
| Sequence | 3:0 | RW | 2h | POR |
| | Sequence. | | | |


©2014 TEMPO SEMICONDCUTOR, INC..

## 7.21. DMic1 (NID = 14h): WCap

| Reg | Byte 4 (Bits 31:24) | Byte 3 (Bits 23:16) | Byte 2 (Bits 15:8) | Byte 1 (Bits 7:0) |
|---|---|---|---|---|
| Set | | | | |
| Get | F0009h | | | |

| Field Name | Bits | R/W | Default | Reset |
|---|---|---|---|---|
| Rsvd2 | 31:24 | R | 00h | N/A (Hard-coded) |
| | Reserved. | | | |
| Type | 23:20 | R | Fh | N/A (Hard-coded) |
| | Widget type:<br>0h = Out Converter<br>1h = In Converter<br>2h = Summing (Mixer)<br>3h = Selector (Mux)<br>4h = Pin Complex<br>5h = Power<br>6h = Volume Knob<br>7h = Beep Generator<br>8h-Eh = Reserved<br>Fh = Vendor Defined | | | |
| Delay | 19:16 | R | 0h | N/A (Hard-coded) |
| | Number of sample delays through widget. | | | |
| Rsvd1 | 15:12 | R | 0h | N/A (Hard-coded) |
| | Reserved. | | | |
| SwapCap | 11 | R | 0h | N/A (Hard-coded) |
| | Left/right swap support: 1 = yes, 0 = no. | | | |
| PwrCntrl | 10 | R | 0h | N/A (Hard-coded) |
| | Power state support: 1 = yes, 0 = no. | | | |
| DigitalStrm | 9 | R | 0h | N/A (Hard-coded) |
| | Digital stream support: 1 = yes (digital), 0 = no (analog). | | | |
| ConnList | 8 | R | 0h | N/A (Hard-coded) |
| | Connection list present: 1 = yes, 0 = no. | | | |


©2014 TEMPO SEMICONDCUTOR, INC..

| Field Name | Bits | R/W | Default | Reset |
|---|---|---|---|---|
| UnsolCap | 7 | R | 0h | N/A (Hard-coded) |
| | Unsolicited response support: 1 = yes, 0 = no. | | | |
| ProcWidget | 6 | R | 0h | N/A (Hard-coded) |
| | Processing state support: 1 = yes, 0 = no. | | | |
| Stripe | 5 | R | 0h | N/A (Hard-coded) |
| | Striping support: 1 = yes, 0 = no. | | | |
| FormatOvrd | 4 | R | 0h | N/A (Hard-coded) |
| | Stream format override: 1 = yes, 0 = no. | | | |
| AmpParOvrd | 3 | R | 0h | N/A (Hard-coded) |
| | Amplifier capabilities override: 1 = yes, no. | | | |
| OutAmpPrsnt | 2 | R | 0h | N/A (Hard-coded) |
| | Output amp present: 1 = yes, 0 = no. | | | |
| InAmpPrsnt | 1 | R | 0h | N/A (Hard-coded) |
| | Input amp present: 1 = yes, 0 = no. | | | |
| Stereo | 0 | R | 0h | N/A (Hard-coded) |
| | Stereo stream support: 1 = yes (stereo), 0 = no (mono). | | | |

### *7.21.1. DMic1 (NID = 14h): PinCap*

| Reg | Byte 4 (Bits 31:24) | Byte 3 (Bits 23:16) | Byte 2 (Bits 15:8) | Byte 1 (Bits 7:0) |
|---|---|---|---|---|
| Set | | | | |
| Get | F000Ch | | | |

| Field Name | Bits | R/W | Default | Reset |
|---|---|---|---|---|
| Rsvd2 | 31:17 | R | 0000h | N/A (Hard-coded) |
| | Reserved. | | | |


©2014 TEMPO SEMICONDCUTOR, INC..

| Field Name | Bits | R/W | Default | Reset |
|---|---|---|---|---|
| EapdCap | 16 | R | 0h | N/A (Hard-coded) |
| | EAPD support: 1 = yes, 0 = no. | | | |
| VRefCntrl | 15:8 | R | 00h | N/A (Hard-coded) |
| | Vref support:<br>bit 7 = Reserved<br>bit 6 = Reserved<br>bit 5 = 100% support (1 = yes, 0 = no)<br>bit 4 = 80% support (1 = yes, 0 = no)<br>bit 3 = Reserved<br>bit 2 = GND support (1 = yes, 0 = no)<br>bit 1 = 50% support (1 = yes, 0 = no)<br>bit 0 = Hi-Z support (1 = yes, 0 = no) | | | |
| Rsvd1 | 7 | R | 0h | N/A (Hard-coded) |
| | Reserved. | | | |
| BalancedIO | 6 | R | 0h | N/A (Hard-coded) |
| | Balanced I/O support: 1 = yes, 0 = no. | | | |
| InCap | 5 | R | 1h | N/A (Hard-coded) |
| | Input support: 1 = yes, 0 = no. | | | |
| OutCap | 4 | R | 0h | N/A (Hard-coded) |
| | Output support: 1 = yes, 0 = no. | | | |
| HPhnDrvCap | 3 | R | 0h | N/A (Hard-coded) |
| | Headphone amp present: 1 = yes, 0 = no. | | | |
| PresDtctCap | 2 | R | 0h | N/A (Hard-coded) |
| | Presence detection support: 1 = yes, 0 = no. | | | |
| TrigRqd | 1 | R | 0h | N/A (Hard-coded) |
| | Trigger required for impedance sense: 1 = yes, 0 = no. | | | |
| ImpSenseCap | 0 | R | 0h | N/A (Hard-coded) |
| | Impedance sense support: 1 = yes, 0 = no. | | | |


©2014 TEMPO SEMICONDCUTOR, INC..

### 7.21.2. DMic1 (NID = 14h): InAmpLeft

| Reg | Byte 4 (Bits 31:24) | Byte 3 (Bits 23:16) | Byte 2 (Bits 15:8) | Byte 1 (Bits 7:0) |
|---|---|---|---|---|
| Set | | | | 360h |
| Get | B2000h | | | |

| Field Name | Bits | R/W | Default | Reset |
|---|---|---|---|---|
| Rsvd1 | 31:2 | R | 00000000h | N/A (Hard-coded) |
| | Reserved. | | | |
| Gain | 1:0 | RW | 0h | POR - DAFG - ULR |
| | Amp gain step number (see InAmpCap parameter pertaining to this widget). | | | |

### 7.21.3. DMic1 (NID = 14h): InAmpRight

| Reg | Byte 4 (Bits 31:24) | Byte 3 (Bits 23:16) | Byte 2 (Bits 15:8) | Byte 1 (Bits 7:0) |
|---|---|---|---|---|
| Set | | | | 350h |
| Get | B0000h | | | |

| Field Name | Bits | R/W | Default | Reset |
|---|---|---|---|---|
| Rsvd1 | 31:2 | R | 00000000h | N/A (Hard-coded) |
| | Reserved. | | | |
| Gain | 1:0 | RW | 0h | POR - DAFG - ULR |
| | Amp gain step number (see InAmpCap parameter pertaining to this widget). | | | |

### 7.21.4. DMic1 (NID = 14h): PwrState

| Reg | Byte 4 (Bits 31:24) | Byte 3 (Bits 23:16) | Byte 2 (Bits 15:8) | Byte 1 (Bits 7:0) |
|---|---|---|---|---|
| Set | | | | 705h |
| Get | F0500h | | | |


©2014 TEMPO SEMICONDCUTOR, INC..

| Field Name | Bits | R/W | Default | Reset |
|---|---|---|---|---|
| Rsvd4 | 31:11 | R | 000000h | N/A (Hard-coded) |
| | Reserved. | | | |
| SettingsReset | 10 | R | 1h | POR - DAFG - ULR |
| | Indicates if any persistent settings in this Widget have been reset. Cleared by PwrState 'Get', or a 'Set' to any Verb in this Widget. | | | |
| Rsvd3 | 9 | R | 0h | N/A (Hard-coded) |
| | Reserved. | | | |
| Error | 8 | R | 0h | POR - DAFG - ULR |
| | Error indicator: 1 = cannot enter requested power state, 0 = no problem with requested power state. | | | |
| Rsvd2 | 7:6 | R | 0h | N/A (Hard-coded) |
| | Reserved. | | | |
| Act | 5:4 | R | 3h | POR - DAFG - LR |
| | Actual power state of this widget. | | | |
| Rsvd1 | 3:2 | R | 0h | N/A (Hard-coded) |
| | Reserved. | | | |
| Set | 1:0 | RW | 0h | POR - DAFG - LR |
| | Current power state setting for this widget. | | | |

### *7.21.5. DMic1 (NID = 14h): PinWCntrl*

| Reg | Byte 4 (Bits 31:24) | Byte 3 (Bits 23:16) | Byte 2 (Bits 15:8) | Byte 1 (Bits 7:0) |
|---|---|---|---|---|
| Set | | | | 707h |
| Get | F0700h | | | |


©2014 TEMPO SEMICONDCUTOR, INC..

| Field Name | Bits | R/W | Default | Reset |
|---|---|---|---|---|
| Rsvd2 | 31:6 | R | 0000000h | N/A (Hard-coded) |
| | Reserved. | | | |
| InEn | 5 | RW | 0h | POR - DAFG - ULR |
| | Input enable: 1 = enabled, 0 = disabled. | | | |
| Rsvd1 | 4:0 | R | 00h | N/A (Hard-coded) |
| | Reserved. | | | |

### *7.21.6. DMic1 (NID = 14h): UnsolResp*

| Reg | Byte 4 (Bits 31:24) | Byte 3 (Bits 23:16) | Byte 2 (Bits 15:8) | Byte 1 (Bits 7:0) |
|---|---|---|---|---|
| Set | | | | 708h |
| Get | F0800h | | | |

| Field Name | Bits | R/W | Default | Reset |
|---|---|---|---|---|
| Rsvd2 | 31:8 | R | 000000h | N/A (Hard-coded) |
| | Reserved. | | | |
| En | 7 | RW | 0h | POR - DAFG - ULR |
| | Unsolicited response enable (also enables Wake events for this Widget): 1 = enabled, 0 = disabled. | | | |
| Rsvd1 | 6 | R | 0h | N/A (Hard-coded) |
| | Reserved. | | | |
| Tag | 5:0 | RW | 00h | POR - DAFG - ULR |
| | Software programmable field returned in top six bits (31:26) of every Unsolicited Response generated by this node. | | | |

### *7.21.7. DMic1 (NID = 14h): ConfigDefault*

| Reg | Byte 4 (Bits 31:24) | Byte 3 (Bits 23:16) | Byte 2 (Bits 15:8) | Byte 1 (Bits 7:0) |
|---|---|---|---|---|
| Set | 71Fh | 71Eh | 71Dh | 71Ch |


©2014 TEMPO SEMICONDCUTOR, INC..

### *7.21.7. DMic1 (NID = 14h): ConfigDefault*

| Reg | Byte 4 (Bits 31:24) | Byte 3 (Bits 23:16) | Byte 2 (Bits 15:8) | Byte 1 (Bits 7:0) |
|---|---|---|---|---|
| Get | F1F00h / F1E00h / F1D00h / F1C00h | | | |

| Field Name | Bits | R/W | Default | Reset |
|---|---|---|---|---|
| PortConnectivity | 31:30 | RW | 2h | POR |
| | Port connectivity:<br>0h = Port complex is connected to a jack<br>1h = No physical connection for port<br>2h = Fixed function device is attached<br>3h = Both jack and internal device attached (info in all other fields refers to integrated device, any presence detection refers to jack) | | | |
| Location | 29:24 | RW | 10h | POR |
| | Location<br><br>Bits [5..4]:<br>0h = External on primary chassis<br>1h = Internal<br>2h = Separate chassis<br>3h = Other<br><br>Bits [3..0]:<br>0h = N/A<br>1h = Rear<br>2h = Front<br>3h = Left<br>4h = Right<br>5h = Top<br>6h = Bottom<br>7h-9h = Special<br>Ah-Fh = Reserved | | | |


©2014 TEMPO SEMICONDCUTOR, INC..

| Field Name | Bits | R/W | Default | Reset |
|---|---|---|---|---|
| Device | 23:20 | RW | Ah | POR |
| | Default device:<br>0h = Line out<br>1h = Speaker<br>2h = HP out<br>3h = CD<br>4h = SPDIF Out<br>5h = Digital other out<br>6h = Modem line side<br>7h = Modem handset side<br>8h = Line in<br>9h = Aux<br>Ah = Mic in<br>Bh = Telephony<br>Ch = SPDIF In<br>Dh = Digital other in<br>Eh = Reserved<br>Fh = Other | | | |
| ConnectionType | 19:16 | RW | 3h | POR |
| | Connection type:<br>0h = Unknown<br>1h = 1/8" stereo/mono<br>2h = 1/4" stereo/mono<br>3h = ATAPI internal<br>4h = RCA<br>5h = Optical<br>6h = Other digital<br>7h = Other analog<br>8h = Multichannel analog (DIN)<br>9h = XLR/Professional<br>Ah = RJ-11 (modem)<br>Bh = Combination<br>Ch-Eh = Reserved<br>Fh = Other | | | |


©2014 TEMPO SEMICONDCUTOR, INC..

| Field Name | Bits | R/W | Default | Reset |
|---|---|---|---|---|
| Color | 15:12 | RW | 0h | POR |
| | Color:<br>0h = Unknown<br>1h = Black<br>2h = Grey<br>3h = Blue<br>4h = Green<br>5h = Red<br>6h = Orange<br>7h = Yellow<br>8h = Purple<br>9h = Pink<br>Ah-Dh = Reserved<br>Eh = White<br>Fh = Other | | | |
| Misc | 11:8 | RW | 1h | POR |
| | Miscellaneous:<br>Bits [3..1] = Reserved<br>Bit 0 = Jack detect override | | | |
| Association | 7:4 | RW | 4h | POR |
| | Default assocation. | | | |
| Sequence | 3:0 | RW | 3h | POR |
| | Sequence. | | | |


©2014 TEMPO SEMICONDCUTOR, INC..

## 7.22. DAC0 (NID = 15h): WCap

| Reg | Byte 4 (Bits 31:24) | Byte 3 (Bits 23:16) | Byte 2 (Bits 15:8) | Byte 1 (Bits 7:0) |
|---|---|---|---|---|
| Set | | | | |
| Get | F0009h | | | |

| Field Name | Bits | R/W | Default | Reset |
|---|---|---|---|---|
| Rsvd2 | 31:24 | R | 00h | N/A (Hard-coded) |
| | Reserved. | | | |
| Type | 23:20 | R | 0h | N/A (Hard-coded) |
| | Widget type:<br>0h = Out Converter<br>1h = In Converter<br>2h = Summing (Mixer)<br>3h = Selector (Mux)<br>4h = Pin Complex<br>5h = Power<br>6h = Volume Knob<br>7h = Beep Generator<br>8h-Eh = Reserved<br>Fh = Vendor Defined | | | |
| Delay | 19:16 | R | Dh | N/A (Hard-coded) |
| | Number of sample delays through widget. | | | |
| Rsvd1 | 15:12 | R | 0h | N/A (Hard-coded) |
| | Reserved. | | | |
| SwapCap | 11 | R | 1h | N/A (Hard-coded) |
| | Left/right swap support: 1 = yes, 0 = no. | | | |
| PwrCntrl | 10 | R | 1h | N/A (Hard-coded) |
| | Power state support: 1 = yes, 0 = no. | | | |
| Dig | 9 | R | 0h | N/A (Hard-coded) |
| | Digital stream support: 1 = yes (digital), 0 = no (analog). | | | |
| ConnList | 8 | R | 0h | N/A (Hard-coded) |
| | Connection list present: 1 = yes, 0 = no. | | | |


©2014 TEMPO SEMICONDCUTOR, INC..

| Field Name | Bits | R/W | Default | Reset |
|---|---|---|---|---|
| UnSolCap | 7 | R | 0h | N/A (Hard-coded) |
| | Unsolicited response support: 1 = yes, 0 = no. | | | |
| ProcWidget | 6 | R | 0h | N/A (Hard-coded) |
| | Processing state support: 1 = yes, 0 = no. | | | |
| Stripe | 5 | R | 0h | N/A (Hard-coded) |
| | Striping support: 1 = yes, 0 = no. | | | |
| FormatOvrd | 4 | R | 0h | N/A (Hard-coded) |
| | Stream format override: 1 = yes, 0 = no. | | | |
| AmpParOvrd | 3 | R | 0h | N/A (Hard-coded) |
| | Amplifier capabilities override: 1 = yes, no. | | | |
| OutAmpPrsnt | 2 | R | 1h | N/A (Hard-coded) |
| | Output amp present: 1 = yes, 0 = no. | | | |
| InAmpPrsnt | 1 | R | 0h | N/A (Hard-coded) |
| | Input amp present: 1 = yes, 0 = no. | | | |
| Stereo | 0 | R | 1h | N/A (Hard-coded) |
| | Stereo stream support: 1 = yes (stereo), 0 = no (mono). | | | |

### *7.22.1. DAC0 (NID = 15h): Cnvtr*

| Reg | Byte 4 (Bits 31:24) | Byte 3 (Bits 23:16) | Byte 2 (Bits 15:8) | Byte 1 (Bits 7:0) |
|---|---|---|---|---|
| Set | | | 2h | |
| Get | A0000h | | | |

| Field Name | Bits | R/W | Default | Reset |
|---|---|---|---|---|
| Rsvd2 | 31:16 | R | 0000h | N/A (Hard-coded) |
| | Reserved. | | | |


©2014 TEMPO SEMICONDCUTOR, INC..

| Field Name | Bits | R/W | Default | Reset |
|---|---|---|---|---|
| StrmType | 15 | R | 0h | N/A (Hard-coded) |
| | Stream type: 1 = Non-PCM, 0 = PCM. | | | |
| FrmtSmplRate | 14 | RW | 0h | POR - DAFG - ULR |
| | Sample base rate: 1 = 44.1kHz, 0 = 48kHz. | | | |
| SmplRateMultp | 13:11 | RW | 0h | POR - DAFG - ULR |
| | Sample base rate multiple:<br>000b= x1 (48kHz/44.1kHz or less)<br>001b= x2 (96kHz/88.2kHz/32kHz)<br>010b= x3 (144kHz)<br>011b= x4 (192kHz/176.4kHz)<br>100b-111b Reserved | | | |
| SmplRateDiv | 10:8 | RW | 0h | POR - DAFG - ULR |
| | Sample base rate divider:<br>000b= Divide by 1 (48kHz/44.1kHz)<br>001b= Divide by 2 (24kHz/20.05kHz)<br>010b= Divide by 3 (16kHz/32kHz)<br>011b= Divide by 4 (11.025kHz)<br>100b= Divide by 5 (9.6kHz)<br>101b= Divide by 6 (8kHz)<br>110b= Divide by 7<br>111b= Divide by 8 (6kHz) | | | |
| Rsvd1 | 7 | R | 0h | N/A (Hard-coded) |
| | Reserved. | | | |
| BitsPerSmpl | 6:4 | RW | 3h | POR - DAFG - ULR |
| | Bits per sample:<br>000b= 8 bits<br>001b= 16 bits<br>010b= 20 bits<br>011b= 24 bits<br>100b= 32 bits<br>101b-111b= Reserved | | | |
| NmbrChan | 3:0 | RW | 1h | POR - DAFG - ULR |
| | Total number of channels in the stream assigned to this converter:<br>0000b-1111b= 1-16 channels. | | | |


©2014 TEMPO SEMICONDCUTOR, INC..

### 7.22.2. DAC0 (NID = 15h): OutAmpLeft

| Reg | Byte 4 (Bits 31:24) | Byte 3 (Bits 23:16) | Byte 2 (Bits 15:8) | Byte 1 (Bits 7:0) |
|---|---|---|---|---|
| Set | | | | 3A0h |
| Get | BA000h | | | |

| Field Name | Bits | R/W | Default | Reset |
|---|---|---|---|---|
| Rsvd | 31:8 | R | 000000h | N/A (Hard-coded) |
| | Reserved. | | | |
| Mute | 7 | RW | 1h | POR - DAFG - ULR |
| | Amp mute: 1 = muted, 0 = not muted. | | | |
| Gain | 6:0 | RW | 7Fh | POR - DAFG - ULR |
| | Amp gain step number (see OutAmpCap parameter pertaining to this widget). | | | |

### 7.22.3. DAC0 (NID = 15h): OutAmpRight

| Reg | Byte 4 (Bits 31:24) | Byte 3 (Bits 23:16) | Byte 2 (Bits 15:8) | Byte 1 (Bits 7:0) |
|---|---|---|---|---|
| Set | | | | 390h |
| Get | B8000h | | | |

| Field Name | Bits | R/W | Default | Reset |
|---|---|---|---|---|
| Rsvd | 31:8 | R | 000000h | N/A (Hard-coded) |
| | Reserved. | | | |
| Mute | 7 | RW | 1h | POR - DAFG - ULR |
| | Amp mute: 1 = muted, 0 = not muted. | | | |
| Gain | 6:0 | RW | 7Fh | POR - DAFG - ULR |
| | Amp gain step number (see OutAmpCap parameter pertaining to this widget). | | | |


©2014 TEMPO SEMICONDCUTOR, INC..

### *7.22.4. DAC0 (NID = 15h): PwrState*

| Reg | Byte 4 (Bits 31:24) | Byte 3 (Bits 23:16) | Byte 2 (Bits 15:8) | Byte 1 (Bits 7:0) |
|---|---|---|---|---|
| Set | | | | 705h |
| Get | F0500h | | | |

| Field Name | Bits | R/W | Default | Reset |
|---|---|---|---|---|
| Rsvd4 | 31:11 | R | 000000h | N/A (Hard-coded) |
| | Reserved. | | | |
| SettingsReset | 10 | R | 1h | POR - DAFG - ULR |
| | Indicates if any persistent settings in this Widget have been reset. Cleared by PwrState 'Get', or a 'Set' to any Verb in this Widget. | | | |
| Rsvd3 | 9 | R | 0h | N/A (Hard-coded) |
| | Reserved. | | | |
| Error | 8 | R | 0h | POR - DAFG - ULR |
| | Error indicator: 1 = cannot enter requested power state, 0 = no problem with requested power state. | | | |
| Rsvd2 | 7:6 | R | 0h | N/A (Hard-coded) |
| | Reserved. | | | |
| Act | 5:4 | R | 3h | POR - DAFG - LR |
| | Actual power state of this widget. | | | |
| Rsvd1 | 3:2 | R | 0h | N/A (Hard-coded) |
| | Reserved. | | | |
| Set | 1:0 | RW | 3h | POR - DAFG - LR |
| | Current power state setting for this widget. | | | |

### *7.22.5. DAC0 (NID = 15h): CnvtrID*

| Reg | Byte 4 (Bits 31:24) | Byte 3 (Bits 23:16) | Byte 2 (Bits 15:8) | Byte 1 (Bits 7:0) |
|---|---|---|---|---|
| Set | | | | 706h |


©2014 TEMPO SEMICONDCUTOR, INC..

### 7.22.5. DAC0 (NID = 15h): CnvtrID

| Reg | Byte 4 (Bits 31:24) | Byte 3 (Bits 23:16) | Byte 2 (Bits 15:8) | Byte 1 (Bits 7:0) |
|---|---|---|---|---|
| Get | F0600h | | | |

| Field Name | Bits | R/W | Default | Reset |
|---|---|---|---|---|
| Rsvd | 31:8 | R | 000000h | N/A (Hard-coded) |
| | Reserved. | | | |
| Strm | 7:4 | RW | 0h | POR - S&DAFG - LR - PS |
| | Stream ID: 0h = Converter "off", 1h-Fh = valid ID's. | | | |
| Ch | 3:0 | RW | 0h | POR - S&DAFG - LR - PS |
| | Channel assignment ("Ch" and "Ch+1" assigned as a pair, for a stereo converter). | | | |

### 7.22.6. DAC0 (NID = 15h): EAPDBTLLR

| Reg | Byte 4 (Bits 31:24) | Byte 3 (Bits 23:16) | Byte 2 (Bits 15:8) | Byte 1 (Bits 7:0) |
|---|---|---|---|---|
| Set | | | | 70Ch |
| Get | F0C00h | | | |

| Field Name | Bits | R/W | Default | Reset |
|---|---|---|---|---|
| Rsvd2 | 31:3 | R | 00000000h | N/A (Hard-coded) |
| | Reserved. | | | |
| SwapEn | 2 | RW | 0h | POR - DAFG - ULR |
| | Swap enable: 1 = L/R swap enabled, 0 = L/R swap disabled. | | | |
| Rsvd1 | 1:0 | R | 0h | N/A (Hard-coded) |
| | Reserved. | | | |


©2014 TEMPO SEMICONDCUTOR, INC..

## 7.23. DAC1 (NID = 16h): WCap

| Reg | Byte 4 (Bits 31:24) | Byte 3 (Bits 23:16) | Byte 2 (Bits 15:8) | Byte 1 (Bits 7:0) |
|---|---|---|---|---|
| Set | | | | |
| Get | F0009h | | | |

| Field Name | Bits | R/W | Default | Reset |
|---|---|---|---|---|
| Rsvd2 | 31:24 | R | 00h | N/A (Hard-coded) |
| | Reserved. | | | |
| Type | 23:20 | R | 0h | N/A (Hard-coded) |
| | Widget type:<br>0h = Out Converter<br>1h = In Converter<br>2h = Summing (Mixer)<br>3h = Selector (Mux)<br>4h = Pin Complex<br>5h = Power<br>6h = Volume Knob<br>7h = Beep Generator<br>8h-Eh = Reserved<br>Fh = Vendor Defined | | | |
| Delay | 19:16 | R | Dh | N/A (Hard-coded) |
| | Number of sample delays through widget. | | | |
| Rsvd1 | 15:12 | R | 0h | N/A (Hard-coded) |
| | Reserved. | | | |
| SwapCap | 11 | R | 1h | N/A (Hard-coded) |
| | Left/right swap support: 1 = yes, 0 = no. | | | |
| PwrCntrl | 10 | R | 1h | N/A (Hard-coded) |
| | Power state support: 1 = yes, 0 = no. | | | |
| Dig | 9 | R | 0h | N/A (Hard-coded) |
| | Digital stream support: 1 = yes (digital), 0 = no (analog). | | | |
| ConnList | 8 | R | 0h | N/A (Hard-coded) |
| | Connection list present: 1 = yes, 0 = no. | | | |


©2014 TEMPO SEMICONDCUTOR, INC..

| Field Name | Bits | R/W | Default | Reset |
|---|---|---|---|---|
| UnSolCap | 7 | R | 0h | N/A (Hard-coded) |
| | Unsolicited response support: 1 = yes, 0 = no. | | | |
| ProcWidget | 6 | R | 0h | N/A (Hard-coded) |
| | Processing state support: 1 = yes, 0 = no. | | | |
| Stripe | 5 | R | 0h | N/A (Hard-coded) |
| | Striping support: 1 = yes, 0 = no. | | | |
| FormatOvrd | 4 | R | 0h | N/A (Hard-coded) |
| | Stream format override: 1 = yes, 0 = no. | | | |
| AmpParOvrd | 3 | R | 0h | N/A (Hard-coded) |
| | Amplifier capabilities override: 1 = yes, no. | | | |
| OutAmpPrsnt | 2 | R | 1h | N/A (Hard-coded) |
| | Output amp present: 1 = yes, 0 = no. | | | |
| InAmpPrsnt | 1 | R | 0h | N/A (Hard-coded) |
| | Input amp present: 1 = yes, 0 = no. | | | |
| Stereo | 0 | R | 1h | N/A (Hard-coded) |
| | Stereo stream support: 1 = yes (stereo), 0 = no (mono). | | | |

### *7.23.1. DAC1 (NID = 16h): Cnvtr*

| Reg | Byte 4 (Bits 31:24) | Byte 3 (Bits 23:16) | Byte 2 (Bits 15:8) | Byte 1 (Bits 7:0) |
|---|---|---|---|---|
| Set | | | 2h | |
| Get | A0000h | | | |

| Field Name | Bits | R/W | Default | Reset |
|---|---|---|---|---|
| Rsvd2 | 31:16 | R | 0000h | N/A (Hard-coded) |
| | Reserved. | | | |


©2014 TEMPO SEMICONDCUTOR, INC..

| Field Name | Bits | R/W | Default | Reset |
|---|---|---|---|---|
| StrmType | 15 | R | 0h | N/A (Hard-coded) |
| | Stream type: 1 = Non-PCM, 0 = PCM. | | | |
| FrmtSmplRate | 14 | RW | 0h | POR - DAFG - ULR |
| | Sample base rate: 1 = 44.1kHz, 0 = 48kHz. | | | |
| SmplRateMultp | 13:11 | RW | 0h | POR - DAFG - ULR |
| | Sample base rate multiple:<br>000b= x1 (48kHz/44.1kHz or less)<br>001b= x2 (96kHz/88.2kHz/32kHz)<br>010b= x3 (144kHz)<br>011b= x4 (192kHz/176.4kHz)<br>100b-111b Reserved | | | |
| SmplRateDiv | 10:8 | RW | 0h | POR - DAFG - ULR |
| | Sample base rate divider:<br>000b= Divide by 1 (48kHz/44.1kHz)<br>001b= Divide by 2 (24kHz/20.05kHz)<br>010b= Divide by 3 (16kHz/32kHz)<br>011b= Divide by 4 (11.025kHz)<br>100b= Divide by 5 (9.6kHz)<br>101b= Divide by 6 (8kHz)<br>110b= Divide by 7<br>111b= Divide by 8 (6kHz) | | | |
| Rsvd1 | 7 | R | 0h | N/A (Hard-coded) |
| | Reserved. | | | |
| BitsPerSmpl | 6:4 | RW | 3h | POR - DAFG - ULR |
| | Bits per sample:<br>000b= 8 bits<br>001b= 16 bits<br>010b= 20 bits<br>011b= 24 bits<br>100b= 32 bits<br>101b-111b= Reserved | | | |
| NmbrChan | 3:0 | RW | 1h | POR - DAFG - ULR |
| | Total number of channels in the stream assigned to this converter:<br>0000b-1111b= 1-16 channels. | | | |


©2014 TEMPO SEMICONDCUTOR, INC..

### 7.23.2. DAC1 (NID = 16h): OutAmpLeft

| Reg | Byte 4 (Bits 31:24) | Byte 3 (Bits 23:16) | Byte 2 (Bits 15:8) | Byte 1 (Bits 7:0) |
|---|---|---|---|---|
| Set | | | | 3A0h |
| Get | BA000h | | | |

| Field Name | Bits | R/W | Default | Reset |
|---|---|---|---|---|
| Rsvd | 31:8 | R | 000000h | N/A (Hard-coded) |
| | Reserved. | | | |
| Mute | 7 | RW | 1h | POR - DAFG - ULR |
| | Amp mute: 1 = muted, 0 = not muted. | | | |
| Gain | 6:0 | RW | 7Fh | POR - DAFG - ULR |
| | Amp gain step number (see OutAmpCap parameter pertaining to this widget). | | | |

### 7.23.3. DAC1 (NID = 16h): OutAmpRight

| Reg | Byte 4 (Bits 31:24) | Byte 3 (Bits 23:16) | Byte 2 (Bits 15:8) | Byte 1 (Bits 7:0) |
|---|---|---|---|---|
| Set | | | | 390h |
| Get | B8000h | | | |

| Field Name | Bits | R/W | Default | Reset |
|---|---|---|---|---|
| Rsvd | 31:8 | R | 000000h | N/A (Hard-coded) |
| | Reserved. | | | |
| Mute | 7 | RW | 1h | POR - DAFG - ULR |
| | Amp mute: 1 = muted, 0 = not muted. | | | |
| Gain | 6:0 | RW | 7Fh | POR - DAFG - ULR |
| | Amp gain step number (see OutAmpCap parameter pertaining to this widget). | | | |


©2014 TEMPO SEMICONDCUTOR, INC..

### *7.23.4. DAC1 (NID = 16h): PwrState*

| Reg | Byte 4 (Bits 31:24) | Byte 3 (Bits 23:16) | Byte 2 (Bits 15:8) | Byte 1 (Bits 7:0) |
|---|---|---|---|---|
| Set | | | | 705h |
| Get | F0500h | | | |

| Field Name | Bits | R/W | Default | Reset |
|---|---|---|---|---|
| Rsvd4 | 31:11 | R | 000000h | N/A (Hard-coded) |
| | Reserved. | | | |
| SettingsReset | 10 | R | 1h | POR - DAFG - ULR |
| | Indicates if any persistent settings in this Widget have been reset. Cleared by PwrState 'Get', or a 'Set' to any Verb in this Widget. | | | |
| Rsvd3 | 9 | R | 0h | N/A (Hard-coded) |
| | Reserved. | | | |
| Error | 8 | R | 0h | POR - DAFG - ULR |
| | Error indicator: 1 = cannot enter requested power state, 0 = no problem with requested power state. | | | |
| Rsvd2 | 7:6 | R | 0h | N/A (Hard-coded) |
| | Reserved. | | | |
| Act | 5:4 | R | 3h | POR - DAFG - LR |
| | Actual power state of this widget. | | | |
| Rsvd1 | 3:2 | R | 0h | N/A (Hard-coded) |
| | Reserved. | | | |
| Set | 1:0 | RW | 3h | POR - DAFG - LR |
| | Current power state setting for this widget. | | | |

### *7.23.5. DAC1 (NID = 16h): CnvtrID*

| Reg | Byte 4 (Bits 31:24) | Byte 3 (Bits 23:16) | Byte 2 (Bits 15:8) | Byte 1 (Bits 7:0) |
|---|---|---|---|---|
| Set | | | | 706h |


©2014 TEMPO SEMICONDCUTOR, INC..

### 7.23.5. DAC1 (NID = 16h): CnvtrID

| Reg | Byte 4 (Bits 31:24) | Byte 3 (Bits 23:16) | Byte 2 (Bits 15:8) | Byte 1 (Bits 7:0) |
|---|---|---|---|---|
| Get | F0600h | | | |

| Field Name | Bits | R/W | Default | Reset |
|---|---|---|---|---|
| Rsvd | 31:8 | R | 000000h | N/A (Hard-coded) |
| | Reserved. | | | |
| Strm | 7:4 | RW | 0h | POR - S&DAFG - LR - PS |
| | Stream ID: 0h = Converter "off", 1h-Fh = valid ID's. | | | |
| Ch | 3:0 | RW | 0h | POR - S&DAFG - LR - PS |
| | Channel assignment ("Ch" and "Ch+1" assigned as a pair, for a stereo converter). | | | |

### 7.23.6. DAC1 (NID = 16h): EAPDBTLLR

| Reg | Byte 4 (Bits 31:24) | Byte 3 (Bits 23:16) | Byte 2 (Bits 15:8) | Byte 1 (Bits 7:0) |
|---|---|---|---|---|
| Set | | | | 70Ch |
| Get | F0C00h | | | |

| Field Name | Bits | R/W | Default | Reset |
|---|---|---|---|---|
| Rsvd2 | 31:3 | R | 00000000h | N/A (Hard-coded) |
| | Reserved. | | | |
| SwapEn | 2 | RW | 0h | POR - DAFG - ULR |
| | Swap enable: 1 = L/R swap enabled, 0 = L/R swap disabled. | | | |
| Rsvd1 | 1:0 | R | 0h | N/A (Hard-coded) |
| | Reserved. | | | |


©2014 TEMPO SEMICONDCUTOR, INC..

## 7.24. DAC2 (NID = 17h): WCap

| Reg | Byte 4 (Bits 31:24) | Byte 3 (Bits 23:16) | Byte 2 (Bits 15:8) | Byte 1 (Bits 7:0) |
|---|---|---|---|---|
| Set | | | | |
| Get | F0009h | | | |

| Field Name | Bits | R/W | Default | Reset |
|---|---|---|---|---|
| Rsvd2 | 31:24 | R | 00h | N/A (Hard-coded) |
| | Reserved. | | | |
| Type | 23:20 | R | 0h | N/A (Hard-coded) |
| | Widget type:<br>0h = Out Converter<br>1h = In Converter<br>2h = Summing (Mixer)<br>3h = Selector (Mux)<br>4h = Pin Complex<br>5h = Power<br>6h = Volume Knob<br>7h = Beep Generator<br>8h-Eh = Reserved<br>Fh = Vendor Defined | | | |
| Delay | 19:16 | R | Dh | N/A (Hard-coded) |
| | Number of sample delays through widget. | | | |
| Rsvd1 | 15:12 | R | 0h | N/A (Hard-coded) |
| | Reserved. | | | |
| SwapCap | 11 | R | 1h | N/A (Hard-coded) |
| | Left/right swap support: 1 = yes, 0 = no. | | | |
| PwrCntrl | 10 | R | 1h | N/A (Hard-coded) |
| | Power state support: 1 = yes, 0 = no. | | | |
| Dig | 9 | R | 0h | N/A (Hard-coded) |
| | Digital stream support: 1 = yes (digital), 0 = no (analog). | | | |
| ConnList | 8 | R | 0h | N/A (Hard-coded) |
| | Connection list present: 1 = yes, 0 = no. | | | |


©2014 TEMPO SEMICONDCUTOR, INC..

| Field Name | Bits | R/W | Default | Reset |
|---|---|---|---|---|
| UnSolCap | 7 | R | 0h | N/A (Hard-coded) |
| | Unsolicited response support: 1 = yes, 0 = no. | | | |
| ProcWidget | 6 | R | 0h | N/A (Hard-coded) |
| | Processing state support: 1 = yes, 0 = no. | | | |
| Stripe | 5 | R | 0h | N/A (Hard-coded) |
| | Striping support: 1 = yes, 0 = no. | | | |
| FormatOvrd | 4 | R | 0h | N/A (Hard-coded) |
| | Stream format override: 1 = yes, 0 = no. | | | |
| AmpParOvrd | 3 | R | 0h | N/A (Hard-coded) |
| | Amplifier capabilities override: 1 = yes, no. | | | |
| OutAmpPrsnt | 2 | R | 1h | N/A (Hard-coded) |
| | Output amp present: 1 = yes, 0 = no. | | | |
| InAmpPrsnt | 1 | R | 0h | N/A (Hard-coded) |
| | Input amp present: 1 = yes, 0 = no. | | | |
| Stereo | 0 | R | 1h | N/A (Hard-coded) |
| | Stereo stream support: 1 = yes (stereo), 0 = no (mono). | | | |

### *7.24.1. DAC2 (NID = 17h): Cnvtr*

| Reg | Byte 4 (Bits 31:24) | Byte 3 (Bits 23:16) | Byte 2 (Bits 15:8) | Byte 1 (Bits 7:0) |
|---|---|---|---|---|
| Set | | | 2h | |
| Get | A0000h | | | |

| Field Name | Bits | R/W | Default | Reset |
|---|---|---|---|---|
| Rsvd2 | 31:16 | R | 0000h | N/A (Hard-coded) |
| | Reserved. | | | |


©2014 TEMPO SEMICONDCUTOR, INC..

| Field Name | Bits | R/W | Default | Reset |
|---|---|---|---|---|
| StrmType | 15 | R | 0h | N/A (Hard-coded) |
| | Stream type: 1 = Non-PCM, 0 = PCM. | | | |
| FrmtSmplRate | 14 | RW | 0h | POR - DAFG - ULR |
| | Sample base rate: 1 = 44.1kHz, 0 = 48kHz. | | | |
| SmplRateMultp | 13:11 | RW | 0h | POR - DAFG - ULR |
| | Sample base rate multiple:<br>000b= x1 (48kHz/44.1kHz or less)<br>001b= x2 (96kHz/88.2kHz/32kHz)<br>010b= x3 (144kHz)<br>011b= x4 (192kHz/176.4kHz)<br>100b-111b Reserved | | | |
| SmplRateDiv | 10:8 | RW | 0h | POR - DAFG - ULR |
| | Sample base rate divider:<br>000b= Divide by 1 (48kHz/44.1kHz)<br>001b= Divide by 2 (24kHz/20.05kHz)<br>010b= Divide by 3 (16kHz/32kHz)<br>011b= Divide by 4 (11.025kHz)<br>100b= Divide by 5 (9.6kHz)<br>101b= Divide by 6 (8kHz)<br>110b= Divide by 7<br>111b= Divide by 8 (6kHz) | | | |
| Rsvd1 | 7 | R | 0h | N/A (Hard-coded) |
| | Reserved. | | | |
| BitsPerSmpl | 6:4 | RW | 3h | POR - DAFG - ULR |
| | Bits per sample:<br>000b= 8 bits<br>001b= 16 bits<br>010b= 20 bits<br>011b= 24 bits<br>100b= 32 bits<br>101b-111b= Reserved | | | |
| NmbrChan | 3:0 | RW | 1h | POR - DAFG - ULR |
| | Total number of channels in the stream assigned to this converter:<br>0000b-1111b= 1-16 channels. | | | |


©2014 TEMPO SEMICONDCUTOR, INC..

### 7.24.2. DAC2 (NID = 17h): OutAmpLeft

| Reg | Byte 4 (Bits 31:24) | Byte 3 (Bits 23:16) | Byte 2 (Bits 15:8) | Byte 1 (Bits 7:0) |
|---|---|---|---|---|
| Set | | | | 3A0h |
| Get | BA000h | | | |

| Field Name | Bits | R/W | Default | Reset |
|---|---|---|---|---|
| Rsvd | 31:8 | R | 000000h | N/A (Hard-coded) |
| | Reserved. | | | |
| Mute | 7 | RW | 1h | POR - DAFG - ULR |
| | Amp mute: 1 = muted, 0 = not muted. | | | |
| Gain | 6:0 | RW | 7Fh | POR - DAFG - ULR |
| | Amp gain step number (see OutAmpCap parameter pertaining to this widget). | | | |

### 7.24.3. DAC2 (NID = 17h): OutAmpRight

| Reg | Byte 4 (Bits 31:24) | Byte 3 (Bits 23:16) | Byte 2 (Bits 15:8) | Byte 1 (Bits 7:0) |
|---|---|---|---|---|
| Set | | | | 390h |
| Get | B8000h | | | |

| Field Name | Bits | R/W | Default | Reset |
|---|---|---|---|---|
| Rsvd | 31:8 | R | 000000h | N/A (Hard-coded) |
| | Reserved. | | | |
| Mute | 7 | RW | 1h | POR - DAFG - ULR |
| | Amp mute: 1 = muted, 0 = not muted. | | | |
| Gain | 6:0 | RW | 7Fh | POR - DAFG - ULR |
| | Amp gain step number (see OutAmpCap parameter pertaining to this widget). | | | |


©2014 TEMPO SEMICONDCUTOR, INC..

### *7.24.4. DAC2 (NID = 17h): PwrState*

| Reg | Byte 4 (Bits 31:24) | Byte 3 (Bits 23:16) | Byte 2 (Bits 15:8) | Byte 1 (Bits 7:0) |
|---|---|---|---|---|
| Set | | | | 705h |
| Get | F0500h | | | |

| Field Name | Bits | R/W | Default | Reset |
|---|---|---|---|---|
| Rsvd4 | 31:11 | R | 000000h | N/A (Hard-coded) |
| | Reserved. | | | |
| SettingsReset | 10 | R | 1h | POR - DAFG - ULR |
| | Indicates if any persistent settings in this Widget have been reset. Cleared by PwrState 'Get', or a 'Set' to any Verb in this Widget. | | | |
| Rsvd3 | 9 | R | 0h | N/A (Hard-coded) |
| | Reserved. | | | |
| Error | 8 | R | 0h | POR - DAFG - ULR |
| | Error indicator: 1 = cannot enter requested power state, 0 = no problem with requested power state. | | | |
| Rsvd2 | 7:6 | R | 0h | N/A (Hard-coded) |
| | Reserved. | | | |
| Act | 5:4 | R | 3h | POR - DAFG - LR |
| | Actual power state of this widget. | | | |
| Rsvd1 | 3:2 | R | 0h | N/A (Hard-coded) |
| | Reserved. | | | |
| Set | 1:0 | RW | 3h | POR - DAFG - LR |
| | Current power state setting for this widget. | | | |

### *7.24.5. DAC2 (NID = 17h): CnvtrID*

| Reg | Byte 4 (Bits 31:24) | Byte 3 (Bits 23:16) | Byte 2 (Bits 15:8) | Byte 1 (Bits 7:0) |
|---|---|---|---|---|
| Set | | | | 706h |


©2014 TEMPO SEMICONDCUTOR, INC..

### 7.24.5. DAC2 (NID = 17h): CnvtrID

| Reg | Byte 4 (Bits 31:24) | Byte 3 (Bits 23:16) | Byte 2 (Bits 15:8) | Byte 1 (Bits 7:0) |
|---|---|---|---|---|
| Get | F0600h | | | |

| Field Name | Bits | R/W | Default | Reset |
|---|---|---|---|---|
| Rsvd | 31:8 | R | 000000h | N/A (Hard-coded) |
| | Reserved. | | | |
| Strm | 7:4 | RW | 0h | POR - S&DAFG - LR - PS |
| | Stream ID: 0h = Converter "off", 1h-Fh = valid ID's. | | | |
| Ch | 3:0 | RW | 0h | POR - S&DAFG - LR - PS |
| | Channel assignment ("Ch" and "Ch+1" assigned as a pair, for a stereo converter). | | | |

### 7.24.6. DAC2 (NID = 17h): EAPDBTLLR

| Reg | Byte 4 (Bits 31:24) | Byte 3 (Bits 23:16) | Byte 2 (Bits 15:8) | Byte 1 (Bits 7:0) |
|---|---|---|---|---|
| Set | | | | 70Ch |
| Get | F0C00h | | | |

| Field Name | Bits | R/W | Default | Reset |
|---|---|---|---|---|
| Rsvd2 | 31:3 | R | 00000000h | N/A (Hard-coded) |
| | Reserved. | | | |
| SwapEn | 2 | RW | 0h | POR - DAFG - ULR |
| | Swap enable: 1 = L/R swap enabled, 0 = L/R swap disabled. | | | |
| Rsvd1 | 1:0 | R | 0h | N/A (Hard-coded) |
| | Reserved. | | | |


©2014 TEMPO SEMICONDCUTOR, INC..

## 7.25. DAC3 (NID = 18h): WCap

| Reg | Byte 4 (Bits 31:24) | Byte 3 (Bits 23:16) | Byte 2 (Bits 15:8) | Byte 1 (Bits 7:0) |
|---|---|---|---|---|
| Set | | | | |
| Get | F0009h | | | |

| Field Name | Bits | R/W | Default | Reset |
|---|---|---|---|---|
| Rsvd2 | 31:24 | R | 00h | N/A (Hard-coded) |
| | Reserved. | | | |
| Type | 23:20 | R | 0h | N/A (Hard-coded) |
| | Widget type:<br>0h = Out Converter<br>1h = In Converter<br>2h = Summing (Mixer)<br>3h = Selector (Mux)<br>4h = Pin Complex<br>5h = Power<br>6h = Volume Knob<br>7h = Beep Generator<br>8h-Eh = Reserved<br>Fh = Vendor Defined | | | |
| Delay | 19:16 | R | Dh | N/A (Hard-coded) |
| | Number of sample delays through widget. | | | |
| Rsvd1 | 15:12 | R | 0h | N/A (Hard-coded) |
| | Reserved. | | | |
| SwapCap | 11 | R | 1h | N/A (Hard-coded) |
| | Left/right swap support: 1 = yes, 0 = no. | | | |
| PwrCntrl | 10 | R | 1h | N/A (Hard-coded) |
| | Power state support: 1 = yes, 0 = no. | | | |
| Dig | 9 | R | 0h | N/A (Hard-coded) |
| | Digital stream support: 1 = yes (digital), 0 = no (analog). | | | |
| ConnList | 8 | R | 0h | N/A (Hard-coded) |
| | Connection list present: 1 = yes, 0 = no. | | | |


©2014 TEMPO SEMICONDCUTOR, INC..

| Field Name | Bits | R/W | Default | Reset |
|---|---|---|---|---|
| UnSolCap | 7 | R | 0h | N/A (Hard-coded) |
| | Unsolicited response support: 1 = yes, 0 = no. | | | |
| ProcWidget | 6 | R | 0h | N/A (Hard-coded) |
| | Processing state support: 1 = yes, 0 = no. | | | |
| Stripe | 5 | R | 0h | N/A (Hard-coded) |
| | Striping support: 1 = yes, 0 = no. | | | |
| FormatOvrd | 4 | R | 0h | N/A (Hard-coded) |
| | Stream format override: 1 = yes, 0 = no. | | | |
| AmpParOvrd | 3 | R | 0h | N/A (Hard-coded) |
| | Amplifier capabilities override: 1 = yes, no. | | | |
| OutAmpPrsnt | 2 | R | 1h | N/A (Hard-coded) |
| | Output amp present: 1 = yes, 0 = no. | | | |
| InAmpPrsnt | 1 | R | 0h | N/A (Hard-coded) |
| | Input amp present: 1 = yes, 0 = no. | | | |
| Stereo | 0 | R | 1h | N/A (Hard-coded) |
| | Stereo stream support: 1 = yes (stereo), 0 = no (mono). | | | |

### *7.25.1. DAC3 (NID = 18h): Cnvtr*

| Reg | Byte 4 (Bits 31:24) | Byte 3 (Bits 23:16) | Byte 2 (Bits 15:8) | Byte 1 (Bits 7:0) |
|---|---|---|---|---|
| Set | | | 2h | |
| Get | A0000h | | | |

| Field Name | Bits | R/W | Default | Reset |
|---|---|---|---|---|
| Rsvd2 | 31:16 | R | 0000h | N/A (Hard-coded) |
| | Reserved. | | | |


©2014 TEMPO SEMICONDCUTOR, INC..

| Field Name | Bits | R/W | Default | Reset |
|---|---|---|---|---|
| StrmType | 15 | R | 0h | N/A (Hard-coded) |
| | Stream type: 1 = Non-PCM, 0 = PCM. | | | |
| FrmtSmplRate | 14 | RW | 0h | POR - DAFG - ULR |
| | Sample base rate: 1 = 44.1kHz, 0 = 48kHz. | | | |
| SmplRateMultp | 13:11 | RW | 0h | POR - DAFG - ULR |
| | Sample base rate multiple:<br>000b= x1 (48kHz/44.1kHz or less)<br>001b= x2 (96kHz/88.2kHz/32kHz)<br>010b= x3 (144kHz)<br>011b= x4 (192kHz/176.4kHz)<br>100b-111b Reserved | | | |
| SmplRateDiv | 10:8 | RW | 0h | POR - DAFG - ULR |
| | Sample base rate divider:<br>000b= Divide by 1 (48kHz/44.1kHz)<br>001b= Divide by 2 (24kHz/20.05kHz)<br>010b= Divide by 3 (16kHz/32kHz)<br>011b= Divide by 4 (11.025kHz)<br>100b= Divide by 5 (9.6kHz)<br>101b= Divide by 6 (8kHz)<br>110b= Divide by 7<br>111b= Divide by 8 (6kHz) | | | |
| Rsvd1 | 7 | R | 0h | N/A (Hard-coded) |
| | Reserved. | | | |
| BitsPerSmpl | 6:4 | RW | 3h | POR - DAFG - ULR |
| | Bits per sample:<br>000b= 8 bits<br>001b= 16 bits<br>010b= 20 bits<br>011b= 24 bits<br>100b= 32 bits<br>101b-111b= Reserved | | | |
| NmbrChan | 3:0 | RW | 1h | POR - DAFG - ULR |
| | Total number of channels in the stream assigned to this converter:<br>0000b-1111b= 1-16 channels. | | | |


©2014 TEMPO SEMICONDCUTOR, INC..

### 7.25.2. DAC3 (NID = 18h): OutAmpLeft

| Reg | Byte 4 (Bits 31:24) | Byte 3 (Bits 23:16) | Byte 2 (Bits 15:8) | Byte 1 (Bits 7:0) |
|---|---|---|---|---|
| Set | | | | 3A0h |
| Get | BA000h | | | |

| Field Name | Bits | R/W | Default | Reset |
|---|---|---|---|---|
| Rsvd | 31:8 | R | 000000h | N/A (Hard-coded) |
| | Reserved. | | | |
| Mute | 7 | RW | 1h | POR - DAFG - ULR |
| | Amp mute: 1 = muted, 0 = not muted. | | | |
| Gain | 6:0 | RW | 7Fh | POR - DAFG - ULR |
| | Amp gain step number (see OutAmpCap parameter pertaining to this widget). | | | |

### 7.25.3. DAC3 (NID = 18h): OutAmpRight

| Reg | Byte 4 (Bits 31:24) | Byte 3 (Bits 23:16) | Byte 2 (Bits 15:8) | Byte 1 (Bits 7:0) |
|---|---|---|---|---|
| Set | | | | 390h |
| Get | B8000h | | | |

| Field Name | Bits | R/W | Default | Reset |
|---|---|---|---|---|
| Rsvd | 31:8 | R | 000000h | N/A (Hard-coded) |
| | Reserved. | | | |
| Mute | 7 | RW | 1h | POR - DAFG - ULR |
| | Amp mute: 1 = muted, 0 = not muted. | | | |
| Gain | 6:0 | RW | 7Fh | POR - DAFG - ULR |
| | Amp gain step number (see OutAmpCap parameter pertaining to this widget). | | | |


©2014 TEMPO SEMICONDCUTOR, INC..

### 7.25.4. DAC3 (NID = 18h): PwrState

| Reg | Byte 4 (Bits 31:24) | Byte 3 (Bits 23:16) | Byte 2 (Bits 15:8) | Byte 1 (Bits 7:0) |
|---|---|---|---|---|
| Set | | | | 705h |
| Get | F0500h | | | |

| Field Name | Bits | R/W | Default | Reset |
|---|---|---|---|---|
| Rsvd4 | 31:11 | R | 000000h | N/A (Hard-coded) |
| | Reserved. | | | |
| SettingsReset | 10 | R | 1h | POR - DAFG - ULR |
| | Indicates if any persistent settings in this Widget have been reset. Cleared by PwrState 'Get', or a 'Set' to any Verb in this Widget. | | | |
| Rsvd3 | 9 | R | 0h | N/A (Hard-coded) |
| | Reserved. | | | |
| Error | 8 | R | 0h | POR - DAFG - ULR |
| | Error indicator: 1 = cannot enter requested power state, 0 = no problem with requested power state. | | | |
| Rsvd2 | 7:6 | R | 0h | N/A (Hard-coded) |
| | Reserved. | | | |
| Act | 5:4 | R | 3h | POR - DAFG - LR |
| | Actual power state of this widget. | | | |
| Rsvd1 | 3:2 | R | 0h | N/A (Hard-coded) |
| | Reserved. | | | |
| Set | 1:0 | RW | 3h | POR - DAFG - LR |
| | Current power state setting for this widget. | | | |

### 7.25.5. DAC3 (NID = 18h): CnvtrID

| Reg | Byte 4 (Bits 31:24) | Byte 3 (Bits 23:16) | Byte 2 (Bits 15:8) | Byte 1 (Bits 7:0) |
|---|---|---|---|---|
| Set | | | | 706h |


©2014 TEMPO SEMICONDCUTOR, INC..

### 7.25.5. DAC3 (NID = 18h): CnvtrID

| Reg | Byte 4 (Bits 31:24) | Byte 3 (Bits 23:16) | Byte 2 (Bits 15:8) | Byte 1 (Bits 7:0) |
|---|---|---|---|---|
| Get | F0600h | | | |

| Field Name | Bits | R/W | Default | Reset |
|---|---|---|---|---|
| Rsvd | 31:8 | R | 000000h | N/A (Hard-coded) |
| | Reserved. | | | |
| Strm | 7:4 | RW | 0h | POR - S&DAFG - LR - PS |
| | Stream ID: 0h = Converter "off", 1h-Fh = valid ID's. | | | |
| Ch | 3:0 | RW | 0h | POR - S&DAFG - LR - PS |
| | Channel assignment ("Ch" and "Ch+1" assigned as a pair, for a stereo converter). | | | |

### 7.25.6. DAC3 (NID = 18h): EAPDBTLLR

| Reg | Byte 4 (Bits 31:24) | Byte 3 (Bits 23:16) | Byte 2 (Bits 15:8) | Byte 1 (Bits 7:0) |
|---|---|---|---|---|
| Set | | | | 70Ch |
| Get | F0C00h | | | |

| Field Name | Bits | R/W | Default | Reset |
|---|---|---|---|---|
| Rsvd2 | 31:3 | R | 00000000h | N/A (Hard-coded) |
| | Reserved. | | | |
| SwapEn | 2 | RW | 0h | POR - DAFG - ULR |
| | Swap enable: 1 = L/R swap enabled, 0 = L/R swap disabled. | | | |
| Rsvd1 | 1:0 | R | 0h | N/A (Hard-coded) |
| | Reserved. | | | |


©2014 TEMPO SEMICONDCUTOR, INC..

## 7.20. DAC4 (NID = 19h): WCap

| Reg | Byte 4 (Bits 31:24) | Byte 3 (Bits 23:16) | Byte 2 (Bits 15:8) | Byte 1 (Bits 7:0) |
|---|---|---|---|---|
| Set | | | | |
| Get | F0009h | | | |

| Field Name | Bits | R/W | Default | Reset |
|---|---|---|---|---|
| Rsvd2 | 31:24 | R | 00h | N/A (Hard-coded) |
| | Reserved. | | | |
| Type | 23:20 | R | 0h | N/A (Hard-coded) |
| | Widget type:<br>0h = Out Converter<br>1h = In Converter<br>2h = Summing (Mixer)<br>3h = Selector (Mux)<br>4h = Pin Complex<br>5h = Power<br>6h = Volume Knob<br>7h = Beep Generator<br>8h-Eh = Reserved<br>Fh = Vendor Defined | | | |
| Delay | 19:16 | R | Dh | N/A (Hard-coded) |
| | Number of sample delays through widget. | | | |
| Rsvd1 | 15:12 | R | 0h | N/A (Hard-coded) |
| | Reserved. | | | |
| SwapCap | 11 | R | 1h | N/A (Hard-coded) |
| | Left/right swap support: 1 = yes, 0 = no. | | | |
| PwrCntrl | 10 | R | 1h | N/A (Hard-coded) |
| | Power state support: 1 = yes, 0 = no. | | | |
| Dig | 9 | R | 0h | N/A (Hard-coded) |
| | Digital stream support: 1 = yes (digital), 0 = no (analog). | | | |
| ConnList | 8 | R | 0h | N/A (Hard-coded) |
| | Connection list present: 1 = yes, 0 = no. | | | |


©2014 TEMPO SEMICONDCUTOR, INC..

| Field Name | Bits | R/W | Default | Reset |
|---|---|---|---|---|
| UnSolCap | 7 | R | 0h | N/A (Hard-coded) |
| | Unsolicited response support: 1 = yes, 0 = no. | | | |
| ProcWidget | 6 | R | 0h | N/A (Hard-coded) |
| | Processing state support: 1 = yes, 0 = no. | | | |
| Stripe | 5 | R | 0h | N/A (Hard-coded) |
| | Striping support: 1 = yes, 0 = no. | | | |
| FormatOvrd | 4 | R | 0h | N/A (Hard-coded) |
| | Stream format override: 1 = yes, 0 = no. | | | |
| AmpParOvrd | 3 | R | 0h | N/A (Hard-coded) |
| | Amplifier capabilities override: 1 = yes, no. | | | |
| OutAmpPrsnt | 2 | R | 1h | N/A (Hard-coded) |
| | Output amp present: 1 = yes, 0 = no. | | | |
| InAmpPrsnt | 1 | R | 0h | N/A (Hard-coded) |
| | Input amp present: 1 = yes, 0 = no. | | | |
| Stereo | 0 | R | 1h | N/A (Hard-coded) |
| | Stereo stream support: 1 = yes (stereo), 0 = no (mono). | | | |

### *7.20.1. DAC4 (NID = 19h): Cnvtr*

| Reg | Byte 4 (Bits 31:24) | Byte 3 (Bits 23:16) | Byte 2 (Bits 15:8) | Byte 1 (Bits 7:0) |
|---|---|---|---|---|
| Set | | | 2h | |
| Get | A0000h | | | |

| Field Name | Bits | R/W | Default | Reset |
|---|---|---|---|---|
| Rsvd2 | 31:16 | R | 0000h | N/A (Hard-coded) |
| | Reserved. | | | |


©2014 TEMPO SEMICONDCUTOR, INC..

| Field Name | Bits | R/W | Default | Reset |
|---|---|---|---|---|
| StrmType | 15 | R | 0h | N/A (Hard-coded) |
| | Stream type: 1 = Non-PCM, 0 = PCM. | | | |
| FrmtSmplRate | 14 | RW | 0h | POR - DAFG - ULR |
| | Sample base rate: 1 = 44.1kHz, 0 = 48kHz. | | | |
| SmplRateMultp | 13:11 | RW | 0h | POR - DAFG - ULR |
| | Sample base rate multiple:<br>000b= x1 (48kHz/44.1kHz or less)<br>001b= x2 (96kHz/88.2kHz/32kHz)<br>010b= x3 (144kHz)<br>011b= x4 (192kHz/176.4kHz)<br>100b-111b Reserved | | | |
| SmplRateDiv | 10:8 | RW | 0h | POR - DAFG - ULR |
| | Sample base rate divider:<br>000b= Divide by 1 (48kHz/44.1kHz)<br>001b= Divide by 2 (24kHz/20.05kHz)<br>010b= Divide by 3 (16kHz/32kHz)<br>011b= Divide by 4 (11.025kHz)<br>100b= Divide by 5 (9.6kHz)<br>101b= Divide by 6 (8kHz)<br>110b= Divide by 7<br>111b= Divide by 8 (6kHz) | | | |
| Rsvd1 | 7 | R | 0h | N/A (Hard-coded) |
| | Reserved. | | | |
| BitsPerSmpl | 6:4 | RW | 3h | POR - DAFG - ULR |
| | Bits per sample:<br>000b= 8 bits<br>001b= 16 bits<br>010b= 20 bits<br>011b= 24 bits<br>100b= 32 bits<br>101b-111b= Reserved | | | |
| NmbrChan | 3:0 | RW | 1h | POR - DAFG - ULR |
| | Total number of channels in the stream assigned to this converter:<br>0000b-1111b= 1-16 channels. | | | |


©2014 TEMPO SEMICONDCUTOR, INC..

### *7.20.2. DAC4 (NID = 19h): OutAmpLeft*

| Reg | Byte 4 (Bits 31:24) | Byte 3 (Bits 23:16) | Byte 2 (Bits 15:8) | Byte 1 (Bits 7:0) |
|---|---|---|---|---|
| Set | | | | 3A0h |
| Get | BA000h | | | |

| Field Name | Bits | R/W | Default | Reset |
|---|---|---|---|---|
| Rsvd | 31:8 | R | 000000h | N/A (Hard-coded) |
| | Reserved. | | | |
| Mute | 7 | RW | 1h | POR - DAFG - ULR |
| | Amp mute: 1 = muted, 0 = not muted. | | | |
| Gain | 6:0 | RW | 7Fh | POR - DAFG - ULR |
| | Amp gain step number (see OutAmpCap parameter pertaining to this widget). | | | |

### *7.20.3. DAC4 (NID = 19h): OutAmpRight*

| Reg | Byte 4 (Bits 31:24) | Byte 3 (Bits 23:16) | Byte 2 (Bits 15:8) | Byte 1 (Bits 7:0) |
|---|---|---|---|---|
| Set | | | | 390h |
| Get | B8000h | | | |

| Field Name | Bits | R/W | Default | Reset |
|---|---|---|---|---|
| Rsvd | 31:8 | R | 000000h | N/A (Hard-coded) |
| | Reserved. | | | |
| Mute | 7 | RW | 1h | POR - DAFG - ULR |
| | Amp mute: 1 = muted, 0 = not muted. | | | |
| Gain | 6:0 | RW | 7Fh | POR - DAFG - ULR |
| | Amp gain step number (see OutAmpCap parameter pertaining to this widget). | | | |


©2014 TEMPO SEMICONDCUTOR, INC..

### *7.20.4. DAC4 (NID = 19h): PwrState*

| Reg | Byte 4 (Bits 31:24) | Byte 3 (Bits 23:16) | Byte 2 (Bits 15:8) | Byte 1 (Bits 7:0) |
|---|---|---|---|---|
| Set | | | | 705h |
| Get | F0500h | | | |

| Field Name | Bits | R/W | Default | Reset |
|---|---|---|---|---|
| Rsvd4 | 31:11 | R | 000000h | N/A (Hard-coded) |
| | Reserved. | | | |
| SettingsReset | 10 | R | 1h | POR - DAFG - ULR |
| | Indicates if any persistent settings in this Widget have been reset. Cleared by PwrState 'Get', or a 'Set' to any Verb in this Widget. | | | |
| Rsvd3 | 9 | R | 0h | N/A (Hard-coded) |
| | Reserved. | | | |
| Error | 8 | R | 0h | POR - DAFG - ULR |
| | Error indicator: 1 = cannot enter requested power state, 0 = no problem with requested power state. | | | |
| Rsvd2 | 7:6 | R | 0h | N/A (Hard-coded) |
| | Reserved. | | | |
| Act | 5:4 | R | 3h | POR - DAFG - LR |
| | Actual power state of this widget. | | | |
| Rsvd1 | 3:2 | R | 0h | N/A (Hard-coded) |
| | Reserved. | | | |
| Set | 1:0 | RW | 3h | POR - DAFG - LR |
| | Current power state setting for this widget. | | | |

### *7.20.5. DAC4 (NID = 19h): CnvtrID*

| Reg | Byte 4 (Bits 31:24) | Byte 3 (Bits 23:16) | Byte 2 (Bits 15:8) | Byte 1 (Bits 7:0) |
|---|---|---|---|---|
| Set | | | | 706h |


©2014 TEMPO SEMICONDCUTOR, INC..

### *7.20.5. DAC4 (NID = 19h): CnvtrID*

| Reg | Byte 4 (Bits 31:24) | Byte 3 (Bits 23:16) | Byte 2 (Bits 15:8) | Byte 1 (Bits 7:0) |
|---|---|---|---|---|
| Get | F0600h | | | |

| Field Name | Bits | R/W | Default | Reset |
|---|---|---|---|---|
| Rsvd | 31:8 | R | 000000h | N/A (Hard-coded) |
| | Reserved. | | | |
| Strm | 7:4 | RW | 0h | POR - S&DAFG - LR - PS |
| | Stream ID: 0h = Converter "off", 1h-Fh = valid ID's. | | | |
| Ch | 3:0 | RW | 0h | POR - S&DAFG - LR - PS |
| | Channel assignment ("Ch" and "Ch+1" assigned as a pair, for a stereo converter). | | | |

### *7.20.6. DAC4 (NID = 19h): EAPDBTLLR*

| Reg | Byte 4 (Bits 31:24) | Byte 3 (Bits 23:16) | Byte 2 (Bits 15:8) | Byte 1 (Bits 7:0) |
|---|---|---|---|---|
| Set | | | | 70Ch |
| Get | F0C00h | | | |

| Field Name | Bits | R/W | Default | Reset |
|---|---|---|---|---|
| Rsvd2 | 31:3 | R | 00000000h | N/A (Hard-coded) |
| | Reserved. | | | |
| SwapEn | 2 | RW | 0h | POR - DAFG - ULR |
| | Swap enable: 1 = L/R swap enabled, 0 = L/R swap disabled. | | | |
| Rsvd1 | 1:0 | R | 0h | N/A (Hard-coded) |
| | Reserved. | | | |


©2014 TEMPO SEMICONDCUTOR, INC..

## 7.27. ADC0Mux (NID = 20h): WCap

| Reg | Byte 4 (Bits 31:24) | Byte 3 (Bits 23:16) | Byte 2 (Bits 15:8) | Byte 1 (Bits 7:0) |
|---|---|---|---|---|
| Set | | | | |
| Get | F0009h | | | |

| Field Name | Bits | R/W | Default | Reset |
|---|---|---|---|---|
| Rsvd2 | 31:24 | R | 00h | N/A (Hard-coded) |
| | Reserved. | | | |
| Type | 23:20 | R | 3h | N/A (Hard-coded) |
| | Widget type:<br>0h = Out Converter<br>1h = In Converter<br>2h = Summing (Mixer)<br>3h = Selector (Mux)<br>4h = Pin Complex<br>5h = Power<br>6h = Volume Knob<br>7h = Beep Generator<br>8h-Eh = Reserved<br>Fh = Vendor Defined | | | |
| Delay | 19:16 | R | 0h | N/A (Hard-coded) |
| | Number of sample delays through widget. | | | |
| Rsvd1 | 15:12 | R | 0h | N/A (Hard-coded) |
| | Reserved. | | | |
| SwapCap | 11 | R | 1h | N/A (Hard-coded) |
| | Left/right swap support: 1 = yes, 0 = no. | | | |
| PwrCntrl | 10 | R | 1h | N/A (Hard-coded) |
| | Power state support: 1 = yes, 0 = no. | | | |
| DigitalStrm | 9 | R | 0h | N/A (Hard-coded) |
| | Digital stream support: 1 = yes (digital), 0 = no (analog). | | | |
| ConnList | 8 | R | 1h | N/A (Hard-coded) |
| | Connection list present: 1 = yes, 0 = no. | | | |


©2014 TEMPO SEMICONDCUTOR, INC..

| Field Name | Bits | R/W | Default | Reset |
|---|---|---|---|---|
| UnsolCap | 7 | R | 0h | N/A (Hard-coded) |
| | Unsolicited response support: 1 = yes, 0 = no. | | | |
| ProcWidget | 6 | R | 0h | N/A (Hard-coded) |
| | Processing state support: 1 = yes, 0 = no. | | | |
| Stripe | 5 | R | 0h | N/A (Hard-coded) |
| | Striping support: 1 = yes, 0 = no. | | | |
| FormatOvrd | 4 | R | 0h | N/A (Hard-coded) |
| | Stream format override: 1 = yes, 0 = no. | | | |
| AmpParamOvrd | 3 | R | 1h | N/A (Hard-coded) |
| | Amplifier capabilities override: 1 = yes, no. | | | |
| OutAmpPrsnt | 2 | R | 1h | N/A (Hard-coded) |
| | Output amp present: 1 = yes, 0 = no. | | | |
| InAmpPrsnt | 1 | R | 0h | N/A (Hard-coded) |
| | Input amp present: 1 = yes, 0 = no. | | | |
| Stereo | 0 | R | 1h | N/A (Hard-coded) |
| | Stereo stream support: 1 = yes (stereo), 0 = no (mono). | | | |

### *7.27.1. ADC0Mux (NID = 20h): ConLst*

| Reg | Byte 4 (Bits 31:24) | Byte 3 (Bits 23:16) | Byte 2 (Bits 15:8) | Byte 1 (Bits 7:0) |
|---|---|---|---|---|
| Set | | | | |
| Get | F000Eh | | | |

| Field Name | Bits | R/W | Default | Reset |
|---|---|---|---|---|
| Rsvd | 31:8 | R | 000000h | N/A (Hard-coded) |
| | Reserved. | | | |


©2014 TEMPO SEMICONDCUTOR, INC..

| Field Name | Bits | R/W | Default | Reset |
|---|---|---|---|---|
| LForm | 7 | R | 0h | N/A (Hard-coded) |
| | Connection list format: 1 = long-form (15-bit) NID entries, 0 = short-form (7-bit) NID entries. | | | |
| ConL | 6:0 | R | 04h in 40QFN<br>06h in 48QFN | N/A (Hard-coded) |
| | Number of NID entries in connection list. | | | |

### 7.27.2. ADC0Mux (NID = 17h): ConLstEntry4

| Reg | Byte 4 (Bits 31:24) | Byte 3 (Bits 23:16) | Byte 2 (Bits 15:8) | Byte 1 (Bits 7:0) |
|---|---|---|---|---|
| Set | | | | |
| Get | F0204h | | | |

| Field Name | Bits | R/W | Default | Reset |
|---|---|---|---|---|
| ConL7 | 31:24 | R | 00h | N/A (Hard-coded) |
| | Unused list entry. | | | |
| ConL6 | 23:16 | R | 00h | N/A (Hard-coded) |
| | Unused list entry. | | | |
| ConL5 | 15:8 | R | 00h in 40QFN<br>14h in 48QFN | N/A (Hard-coded) |
| | DMic1 Pin widget (0x14) for QFN48, reserved for QFN40. | | | |
| ConL4 | 7:0 | R | 00h in 40QFN<br>13h in 48QFN | N/A (Hard-coded) |
| | DMic0 Pin widget (0x13) for QFN48, reserved for QFN40. | | | |

### 7.27.3. ADC0Mux (NID = 20h): ConLstEntry0

| Reg | Byte 4 (Bits 31:24) | Byte 3 (Bits 23:16) | Byte 2 (Bits 15:8) | Byte 1 (Bits 7:0) |
|---|---|---|---|---|
| Set | | | | |
| Get | F0200h | | | |


©2014 TEMPO SEMICONDCUTOR, INC..

| Field Name | Bits | R/W | Default | Reset |
|---|---|---|---|---|
| ConL3 | 31:24 | R | 12h | N/A (Hard-coded) |
| | CD Pin widget (0x12) | | | |
| ConL2Range | 23 | R | 1h | N/A (Hard-coded) |
| | ConL1 .. ConL2 define a selectalbe range input | | | |
| ConL2 | 22:16 | R | 11h | N/A (Hard-coded) |
| | Port H Pin widget (0x10) | | | |
| ConL1 | 15:8 | R | 0Ah | N/A (Hard-coded) |
| | Port A Pin widget (0x0A) | | | |
| ConL0 | 7:0 | R | 1Dh | N/A (Hard-coded) |
| | Mixer Summing widget (0x1D | | | |

### *7.27.4. ADC0Mux (NID = 20h): OutAmpCap*

| Reg | Byte 4 (Bits 31:24) | Byte 3 (Bits 23:16) | Byte 2 (Bits 15:8) | Byte 1 (Bits 7:0) |
|---|---|---|---|---|
| Set | | | | |
| Get | F0012h | | | |

| Field Name | Bits | R/W | Default | Reset |
|---|---|---|---|---|
| Mute | 31 | R | 1h | N/A (Hard-coded) |
| | Mute support: 1 = yes, 0 = no. | | | |
| Rsvd3 | 30:23 | R | 00h | N/A (Hard-coded) |
| | Reserved. | | | |
| StepSize | 22:16 | R | 05h | N/A (Hard-coded) |
| | Size of each step in the gain range: 0 to 127 = .25dB to 32dB, in .25dB steps. | | | |
| Rsvd2 | 15 | R | 0h | N/A (Hard-coded) |
| | Reserved. | | | |


©2014 TEMPO SEMICONDCUTOR, INC..

| Field Name | Bits | R/W | Default | Reset |
|---|---|---|---|---|
| NumSteps | 14:8 | R | 0Fh | N/A (Hard-coded) |
| | Number of gains steps (number of possible settings - 1). | | | |
| Rsvd1 | 7 | R | 0h | N/A (Hard-coded) |
| | Reserved. | | | |
| Offset | 6:0 | R | 00h | N/A (Hard-coded) |
| | Indicates which step is 0dB | | | |

### *7.27.5. ADC0Mux (NID = 20h): OutAmpLeft*

| Reg | Byte 4 (Bits 31:24) | Byte 3 (Bits 23:16) | Byte 2 (Bits 15:8) | Byte 1 (Bits 7:0) |
|---|---|---|---|---|
| Set | | | | 3A0h |
| Get | BA000h | | | |

| Field Name | Bits | R/W | Default | Reset |
|---|---|---|---|---|
| Rsvd2 | 31:8 | R | 000000h | N/A (Hard-coded) |
| | Reserved. | | | |
| Mute | 7 | RW | 1h | POR - DAFG - ULR |
| | Amp mute: 1 = muted, 0 = not muted. | | | |
| Rsvd1 | 6:4 | R | 0h | N/A (Hard-coded) |
| | Reserved. | | | |
| Gain | 3:0 | RW | 0h | POR - DAFG - ULR |
| | Amp gain step number (see OutAmpCap parameter pertaining to this widget). | | | |

### *7.27.6. ADC0Mux (NID = 20h): OutAmpRight*

| Reg | Byte 4 (Bits 31:24) | Byte 3 (Bits 23:16) | Byte 2 (Bits 15:8) | Byte 1 (Bits 7:0) |
|---|---|---|---|---|
| Set | | | | 390h |
| Get | B8000h | | | |


©2014 TEMPO SEMICONDCUTOR, INC..

| Field Name | Bits | R/W | Default | Reset |
|---|---|---|---|---|
| Rsvd2 | 31:8 | R | 000000h | N/A (Hard-coded) |
| | Reserved. | | | |
| Mute | 7 | RW | 1h | POR - DAFG - ULR |
| | Amp mute: 1 = muted, 0 = not muted. | | | |
| Rsvd1 | 6:4 | R | 0h | N/A (Hard-coded) |
| | Reserved. | | | |
| Gain | 3:0 | RW | 0h | POR - DAFG - ULR |
| | Amp gain step number (see OutAmpCap parameter pertaining to this widget). | | | |

### *7.27.7. ADC0Mux (NID = 20h): ConSelectCtrl*

| Reg | Byte 4 (Bits 31:24) | Byte 3 (Bits 23:16) | Byte 2 (Bits 15:8) | Byte 1 (Bits 7:0) |
|---|---|---|---|---|
| Set | | | | 701h |
| Get | F0100h | | | |

| Field Name | Bits | R/W | Default | Reset |
|---|---|---|---|---|
| Rsvd | 31:3 | R | 00000000h | N/A (Hard-coded) |
| | Reserved. | | | |
| Index | 2:0 | RW | 0h | POR - DAFG - ULR |
| | Connection select control index. | | | |

### *7.27.8. ADC0Mux (NID = 20h): PwrState*

| Reg | Byte 4 (Bits 31:24) | Byte 3 (Bits 23:16) | Byte 2 (Bits 15:8) | Byte 1 (Bits 7:0) |
|---|---|---|---|---|
| Set | | | | 705h |
| Get | F0500h | | | |


©2014 TEMPO SEMICONDCUTOR, INC..

| Field Name | Bits | R/W | Default | Reset |
|---|---|---|---|---|
| Rsvd4 | 31:11 | R | 000000h | N/A (Hard-coded) |
| | Reserved. | | | |
| SettingsReset | 10 | R | 1h | POR - DAFG - ULR |
| | Indicates if any persistent settings in this Widget have been reset. Cleared by PwrState 'Get', or a 'Set' to any Verb in this Widget. | | | |
| Rsvd3 | 9 | R | 0h | N/A (Hard-coded) |
| | Reserved. | | | |
| Error | 8 | R | 0h | POR - DAFG - ULR |
| | Error indicator: 1 = cannot enter requested power state, 0 = no problem with requested power state. | | | |
| Rsvd2 | 7:6 | R | 0h | N/A (Hard-coded) |
| | Reserved. | | | |
| Act | 5:4 | R | 3h | POR - DAFG - LR |
| | Actual power state of this widget. | | | |
| Rsvd1 | 3:2 | R | 0h | N/A (Hard-coded) |
| | Reserved. | | | |
| Set | 1:0 | RW | 0h | POR - DAFG - LR |
| | Current power state setting for this widget. | | | |

### *7.27.9. ADC0Mux (NID = 20h): EAPDBTLLR*

| Reg | Byte 4 (Bits 31:24) | Byte 3 (Bits 23:16) | Byte 2 (Bits 15:8) | Byte 1 (Bits 7:0) |
|---|---|---|---|---|
| Set | | | | 70Ch |
| Get | F0C00h | | | |


©2014 TEMPO SEMICONDCUTOR, INC..

| Field Name | Bits | R/W | Default | Reset |
|---|---|---|---|---|
| Rsvd2 | 31:3 | R | 00000000h | N/A (Hard-coded) |
| | Reserved. | | | |
| SwapEn | 2 | RW | 0h | POR - DAFG - ULR |
| | Swap enable: 1 = L/R swap enabled, 0 = L/R swap disabled. | | | |
| Rsvd1 | 1:0 | R | 0h | N/A (Hard-coded) |
| | Reserved. | | | |


©2014 TEMPO SEMICONDCUTOR, INC..

## 7.28. ADC1Mux (NID = 21h): WCap

| Reg | Byte 4 (Bits 31:24) | Byte 3 (Bits 23:16) | Byte 2 (Bits 15:8) | Byte 1 (Bits 7:0) |
|---|---|---|---|---|
| Set | | | | |
| Get | F0009h | | | |

| Field Name | Bits | R/W | Default | Reset |
|---|---|---|---|---|
| Rsvd2 | 31:24 | R | 00h | N/A (Hard-coded) |
| | Reserved. | | | |
| Type | 23:20 | R | 3h | N/A (Hard-coded) |
| | Widget type:<br>0h = Out Converter<br>1h = In Converter<br>2h = Summing (Mixer)<br>3h = Selector (Mux)<br>4h = Pin Complex<br>5h = Power<br>6h = Volume Knob<br>7h = Beep Generator<br>8h-Eh = Reserved<br>Fh = Vendor Defined | | | |
| Delay | 19:16 | R | 0h | N/A (Hard-coded) |
| | Number of sample delays through widget. | | | |
| Rsvd1 | 15:12 | R | 0h | N/A (Hard-coded) |
| | Reserved. | | | |
| SwapCap | 11 | R | 1h | N/A (Hard-coded) |
| | Left/right swap support: 1 = yes, 0 = no. | | | |
| PwrCntrl | 10 | R | 1h | N/A (Hard-coded) |
| | Power state support: 1 = yes, 0 = no. | | | |
| DigitalStrm | 9 | R | 0h | N/A (Hard-coded) |
| | Digital stream support: 1 = yes (digital), 0 = no (analog). | | | |
| ConnList | 8 | R | 1h | N/A (Hard-coded) |
| | Connection list present: 1 = yes, 0 = no. | | | |


©2014 TEMPO SEMICONDCUTOR, INC..

| Field Name | Bits | R/W | Default | Reset |
|---|---|---|---|---|
| UnsolCap | 7 | R | 0h | N/A (Hard-coded) |
| | Unsolicited response support: 1 = yes, 0 = no. | | | |
| ProcWidget | 6 | R | 0h | N/A (Hard-coded) |
| | Processing state support: 1 = yes, 0 = no. | | | |
| Stripe | 5 | R | 0h | N/A (Hard-coded) |
| | Striping support: 1 = yes, 0 = no. | | | |
| FormatOvrd | 4 | R | 0h | N/A (Hard-coded) |
| | Stream format override: 1 = yes, 0 = no. | | | |
| AmpParamOvrd | 3 | R | 1h | N/A (Hard-coded) |
| | Amplifier capabilities override: 1 = yes, no. | | | |
| OutAmpPrsnt | 2 | R | 1h | N/A (Hard-coded) |
| | Output amp present: 1 = yes, 0 = no. | | | |
| InAmpPrsnt | 1 | R | 0h | N/A (Hard-coded) |
| | Input amp present: 1 = yes, 0 = no. | | | |
| Stereo | 0 | R | 1h | N/A (Hard-coded) |
| | Stereo stream support: 1 = yes (stereo), 0 = no (mono). | | | |

### *7.28.1. ADC1Mux (NID = 21h): ConLst*

| Reg | Byte 4 (Bits 31:24) | Byte 3 (Bits 23:16) | Byte 2 (Bits 15:8) | Byte 1 (Bits 7:0) |
|---|---|---|---|---|
| Set | | | | |
| Get | F000Eh | | | |

| Field Name | Bits | R/W | Default | Reset |
|---|---|---|---|---|
| Rsvd | 31:8 | R | 000000h | N/A (Hard-coded) |
| | Reserved. | | | |


©2014 TEMPO SEMICONDCUTOR, INC..

| Field Name | Bits | R/W | Default | Reset |
|---|---|---|---|---|
| LForm | 7 | R | 0h | N/A (Hard-coded) |
| | Connection list format: 1 = long-form (15-bit) NID entries, 0 = short-form (7-bit) NID entries. | | | |
| ConL | 6:0 | R | 05h | N/A (Hard-coded) |
| | Number of NID entries in connection list. | | | |

### *7.28.2. ADC1Mux (NID = 21h): ConLstEntry4*

| Reg | Byte 4 (Bits 31:24) | Byte 3 (Bits 23:16) | Byte 2 (Bits 15:8) | Byte 1 (Bits 7:0) |
|---|---|---|---|---|
| Set | | | | |
| Get | F0204h | | | |

| Field Name | Bits | R/W | Default | Reset |
|---|---|---|---|---|
| ConL7 | 31:24 | R | 00h | N/A (Hard-coded) |
| | Unused list entry. | | | |
| ConL6 | 23:16 | R | 00h | N/A (Hard-coded) |
| | Unused list entry | | | |
| ConL5 | 15:8 | R | 00h in 40QFN<br>14h in 48QFN | N/A (Hard-coded) |
| | DMic1 Pin widget (0x14) for QFN48, reserved for QFN40 | | | |
| ConL4 | 7:0 | R | 00h in 40QFN<br>13h in 48QFN | N/A (Hard-coded) |
| | DMic0 Pin widget (0x13) for QFN48, reserved for QFN40 | | | |

### *7.28.3. ADC1Mux (NID = 21h): ConLstEntry0*

| Reg | Byte 4 (Bits 31:24) | Byte 3 (Bits 23:16) | Byte 2 (Bits 15:8) | Byte 1 (Bits 7:0) |
|---|---|---|---|---|
| Set | | | | |
| Get | F0200h | | | |


©2014 TEMPO SEMICONDCUTOR, INC..

| Field Name | Bits | R/W | Default | Reset |
|---|---|---|---|---|
| ConL3 | 31:24 | R | 1Bh | N/A (Hard-coded) |
| | Mixer Summing widget (0x1B) | | | |
| ConL2Range | 23 | R | 1h | N/A (Hard-coded) |
| | ConL1 .. ConL2 define a selectalbe range input | | | |
| ConL2 | 22:16 | R | 11h | N/A (Hard-coded) |
| | Port H Pin widget (0x10) | | | |
| ConL1 | 15:8 | R | 0Ah | N/A (Hard-coded) |
| | Port A Pin widget (0x0A) | | | |
| ConL0 | 7:0 | R | 1Dh | N/A (Hard-coded) |
| | Mixer Summing widget (0x0D) | | | |

### *7.28.4. ADC1Mux (NID = 21h): OutAmpCap*

| Reg | Byte 4 (Bits 31:24) | Byte 3 (Bits 23:16) | Byte 2 (Bits 15:8) | Byte 1 (Bits 7:0) |
|---|---|---|---|---|
| Set | | | | |
| Get | F0012h | | | |

| Field Name | Bits | R/W | Default | Reset |
|---|---|---|---|---|
| Mute | 31 | R | 1h | N/A (Hard-coded) |
| | Mute support: 1 = yes, 0 = no. | | | |
| Rsvd3 | 30:23 | R | 00h | N/A (Hard-coded) |
| | Reserved. | | | |
| StepSize | 22:16 | R | 05h | N/A (Hard-coded) |
| | Size of each step in the gain range: 0 to 127 = .25dB to 32dB, in .25dB steps. | | | |
| Rsvd2 | 15 | R | 0h | N/A (Hard-coded) |
| | Reserved. | | | |


©2014 TEMPO SEMICONDCUTOR, INC..

| Field Name | Bits | R/W | Default | Reset |
|---|---|---|---|---|
| NumSteps | 14:8 | R | 0Fh | N/A (Hard-coded) |
| | Number of gains steps (number of possible settings - 1). | | | |
| Rsvd1 | 7 | R | 0h | N/A (Hard-coded) |
| | Reserved. | | | |
| Offset | 6:0 | R | 00h | N/A (Hard-coded) |
| | Indicates which step is 0dB | | | |

### *7.28.5. ADC1Mux (NID = 21h): OutAmpLeft*

| Reg | Byte 4 (Bits 31:24) | Byte 3 (Bits 23:16) | Byte 2 (Bits 15:8) | Byte 1 (Bits 7:0) |
|---|---|---|---|---|
| Set | | | | 3A0h |
| Get | BA000h | | | |

| Field Name | Bits | R/W | Default | Reset |
|---|---|---|---|---|
| Rsvd2 | 31:8 | R | 000000h | N/A (Hard-coded) |
| | Reserved. | | | |
| Mute | 7 | RW | 1h | POR - DAFG - ULR |
| | Amp mute: 1 = muted, 0 = not muted. | | | |
| Rsvd1 | 6:4 | R | 0h | N/A (Hard-coded) |
| | Reserved. | | | |
| Gain | 3:0 | RW | 0h | POR - DAFG - ULR |
| | Amp gain step number (see OutAmpCap parameter pertaining to this widget). | | | |

### *7.28.6. ADC1Mux (NID = 21h): OutAmpRight*

| Reg | Byte 4 (Bits 31:24) | Byte 3 (Bits 23:16) | Byte 2 (Bits 15:8) | Byte 1 (Bits 7:0) |
|---|---|---|---|---|
| Set | | | | 390h |
| Get | B8000h | | | |


©2014 TEMPO SEMICONDCUTOR, INC..

| Field Name | Bits | R/W | Default | Reset |
|---|---|---|---|---|
| Rsvd2 | 31:8 | R | 000000h | N/A (Hard-coded) |
| | Reserved. | | | |
| Mute | 7 | RW | 1h | POR - DAFG - ULR |
| | Amp mute: 1 = muted, 0 = not muted. | | | |
| Rsvd1 | 6:4 | R | 0h | N/A (Hard-coded) |
| | Reserved. | | | |
| Gain | 3:0 | RW | 0h | POR - DAFG - ULR |
| | Amp gain step number (see OutAmpCap parameter pertaining to this widget). | | | |

### *7.28.7. ADC1Mux (NID = 21h): ConSelectCtrl*

| Reg | Byte 4 (Bits 31:24) | Byte 3 (Bits 23:16) | Byte 2 (Bits 15:8) | Byte 1 (Bits 7:0) |
|---|---|---|---|---|
| Set | | | | 701h |
| Get | F0100h | | | |

| Field Name | Bits | R/W | Default | Reset |
|---|---|---|---|---|
| Rsvd | 31:3 | R | 00000000h | N/A (Hard-coded) |
| | Reserved. | | | |
| Index | 2:0 | RW | 0h | POR - DAFG - ULR |
| | Connection select control index. | | | |

### *7.28.8. ADC1Mux (NID = 21h): PwrState*

| Reg | Byte 4 (Bits 31:24) | Byte 3 (Bits 23:16) | Byte 2 (Bits 15:8) | Byte 1 (Bits 7:0) |
|---|---|---|---|---|
| Set | | | | 705h |
| Get | F0500h | | | |


©2014 TEMPO SEMICONDCUTOR, INC..

| Field Name | Bits | R/W | Default | Reset |
|---|---|---|---|---|
| Rsvd4 | 31:11 | R | 000000h | N/A (Hard-coded) |
| | Reserved. | | | |
| SettingsReset | 10 | R | 1h | POR - DAFG - ULR |
| | Indicates if any persistent settings in this Widget have been reset. Cleared by PwrState 'Get', or a 'Set' to any Verb in this Widget. | | | |
| Rsvd3 | 9 | R | 0h | N/A (Hard-coded) |
| | Reserved. | | | |
| Error | 8 | R | 0h | POR - DAFG - ULR |
| | Error indicator: 1 = cannot enter requested power state, 0 = no problem with requested power state. | | | |
| Rsvd2 | 7:6 | R | 0h | N/A (Hard-coded) |
| | Reserved. | | | |
| Act | 5:4 | R | 3h | POR - DAFG - LR |
| | Actual power state of this widget. | | | |
| Rsvd1 | 3:2 | R | 0h | N/A (Hard-coded) |
| | Reserved. | | | |
| Set | 1:0 | RW | 0h | POR - DAFG - LR |
| | Current power state setting for this widget. | | | |

### *7.28.9. ADC1Mux (NID = 21h): EAPDBTLLR*

| Reg | Byte 4 (Bits 31:24) | Byte 3 (Bits 23:16) | Byte 2 (Bits 15:8) | Byte 1 (Bits 7:0) |
|---|---|---|---|---|
| Set | | | | 70Ch |
| Get | F0C00h | | | |


©2014 TEMPO SEMICONDCUTOR, INC..

| Field Name | Bits | R/W | Default | Reset |
|---|---|---|---|---|
| Rsvd2 | 31:3 | R | 00000000h | N/A (Hard-coded) |
| | Reserved. | | | |
| SwapEn | 2 | RW | 0h | POR - DAFG - ULR |
| | Swap enable: 1 = L/R swap enabled, 0 = L/R swap disabled. | | | |
| Rsvd1 | 1:0 | R | 0h | N/A (Hard-coded) |
| | Reserved. | | | |


©2014 TEMPO SEMICONDCUTOR, INC..

## 7.29. Dig0Pin (NID = 22h): WCap

| Reg | Byte 4 (Bits 31:24) | Byte 3 (Bits 23:16) | Byte 2 (Bits 15:8) | Byte 1 (Bits 7:0) |
|---|---|---|---|---|
| Set | | | | |
| Get | F0009h | | | |

| Field Name | Bits | R/W | Default | Reset |
|---|---|---|---|---|
| Rsvd2 | 31:24 | R | 00h | N/A (Hard-coded) |
| | Reserved. | | | |
| Type | 23:20 | R | 4h | N/A (Hard-coded) |
| | Widget type:<br>0h = Out Converter<br>1h = In Converter<br>2h = Summing (Mixer)<br>3h = Selector (Mux)<br>4h = Pin Complex<br>5h = Power<br>6h = Volume Knob<br>7h = Beep Generator<br>8h-Eh = Reserved<br>Fh = Vendor Defined | | | |
| Delay | 19:16 | R | 0h | N/A (Hard-coded) |
| | Number of sample delays through widget. | | | |
| Rsvd1 | 15:12 | R | 0h | N/A (Hard-coded) |
| | Reserved. | | | |
| SwapCap | 11 | R | 0h | N/A (Hard-coded) |
| | Left/right swap support: 1 = yes, 0 = no. | | | |
| PwrCntrl | 10 | R | 1h | N/A (Hard-coded) |
| | Power state support: 1 = yes, 0 = no. | | | |
| Dig | 9 | R | 1h | N/A (Hard-coded) |
| | Digital stream support: 1 = yes (digital), 0 = no (analog). | | | |
| ConnList | 8 | R | 1h | N/A (Hard-coded) |
| | Connection list present: 1 = yes, 0 = no. | | | |


©2014 TEMPO SEMICONDCUTOR, INC..

| Field Name | Bits | R/W | Default | Reset |
|---|---|---|---|---|
| UnSolCap | 7 | R | 1h | N/A (Hard-coded) |
| | Unsolicited response support: 1 = yes, 0 = no. | | | |
| ProcWidget | 6 | R | 0h | N/A (Hard-coded) |
| | Processing state support: 1 = yes, 0 = no. | | | |
| Stripe | 5 | R | 0h | N/A (Hard-coded) |
| | Striping support: 1 = yes, 0 = no. | | | |
| FormatOvrd | 4 | R | 0h | N/A (Hard-coded) |
| | Stream format override: 1 = yes, 0 = no. | | | |
| AmpParOvrd | 3 | R | 0h | N/A (Hard-coded) |
| | Amplifier capabilities override: 1 = yes, no. | | | |
| OutAmpPrsnt | 2 | R | 0h | N/A (Hard-coded) |
| | Output amp present: 1 = yes, 0 = no. | | | |
| InAmpPrsnt | 1 | R | 0h | N/A (Hard-coded) |
| | Input amp present: 1 = yes, 0 = no. | | | |
| Stereo | 0 | R | 1h | N/A (Hard-coded) |
| | Stereo stream support: 1 = yes (stereo), 0 = no (mono). | | | |

### *7.29.1. Dig0Pin (NID = 22h): PinCap*

| Reg | Byte 4 (Bits 31:24) | Byte 3 (Bits 23:16) | Byte 2 (Bits 15:8) | Byte 1 (Bits 7:0) |
|---|---|---|---|---|
| Set | | | | |
| Get | F000Ch | | | |

| Field Name | Bits | R/W | Default | Reset |
|---|---|---|---|---|
| Rsvd2 | 31:17 | R | 0000h | N/A (Hard-coded) |
| | Reserved. | | | |


©2014 TEMPO SEMICONDCUTOR, INC..

| Field Name | Bits | R/W | Default | Reset |
|---|---|---|---|---|
| EapdCap | 16 | R | 0h | N/A (Hard-coded) |
| | EAPD support: 1 = yes, 0 = no. | | | |
| VrefCntrl | 15:8 | R | 00h | N/A (Hard-coded) |
| | Vref support:<br>bit 7 = Reserved<br>bit 6 = Reserved<br>bit 5 = 100% support (1 = yes, 0 = no)<br>bit 4 = 80% support (1 = yes, 0 = no)<br>bit 3 = Reserved<br>bit 2 = GND support (1 = yes, 0 = no)<br>bit 1 = 50% support (1 = yes, 0 = no)<br>bit 0 = Hi-Z support (1 = yes, 0 = no) | | | |
| Rsvd1 | 7 | R | 0h | N/A (Hard-coded) |
| | Reserved. | | | |
| BalancedIO | 6 | R | 0h | N/A (Hard-coded) |
| | Balanced I/O support: 1 = yes, 0 = no. | | | |
| InCap | 5 | R | 0h | N/A (Hard-coded) |
| | Input support: 1 = yes, 0 = no. | | | |
| OutCap | 4 | R | 1h | N/A (Hard-coded) |
| | Output support: 1 = yes, 0 = no. | | | |
| HdphDrvCap | 3 | R | 0h | N/A (Hard-coded) |
| | Headphone amp present: 1 = yes, 0 = no. | | | |
| PresDtctCap | 2 | R | 1h | N/A (Hard-coded) |
| | Presence detection support: 1 = yes, 0 = no. | | | |
| TrigRqd | 1 | R | 0h | N/A (Hard-coded) |
| | Trigger required for impedance sense: 1 = yes, 0 = no. | | | |
| ImpSenseCap | 0 | R | 0h | N/A (Hard-coded) |
| | Impedance sense support: 1 = yes, 0 = no. | | | |


©2014 TEMPO SEMICONDCUTOR, INC..

### 7.29.2. Dig0Pin (NID = 22h): ConLst

| Reg | Byte 4 (Bits 31:24) | Byte 3 (Bits 23:16) | Byte 2 (Bits 15:8) | Byte 1 (Bits 7:0) |
|---|---|---|---|---|
| Set | | | | |
| Get | F000Eh | | | |

| Field Name | Bits | R/W | Default | Reset |
|---|---|---|---|---|
| Rsvd | 31:8 | R | 000000h | N/A (Hard-coded) |
| | Reserved. | | | |
| LForm | 7 | R | 0h | N/A (Hard-coded) |
| | Connection list format: 1 = long-form (15-bit) NID entries, 0 = short-form (7-bit) NID entries. | | | |
| ConL | 6:0 | R | 01h | N/A (Hard-coded) |
| | Number of NID entries in connection list. | | | |

### 7.29.3. Dig0Pin (NID = 22h): ConLstEntry0

| Reg | Byte 4 (Bits 31:24) | Byte 3 (Bits 23:16) | Byte 2 (Bits 15:8) | Byte 1 (Bits 7:0) |
|---|---|---|---|---|
| Set | | | | |
| Get | F0200h | | | |

| Field Name | Bits | R/W | Default | Reset |
|---|---|---|---|---|
| ConL3 | 31:24 | R | 00h | N/A (Hard-coded) |
| | Unused list entry. | | | |
| ConL2 | 23:16 | R | 00h | N/A (Hard-coded) |
| | Unused list entry. | | | |
| ConL1 | 15:8 | R | 00h | N/A (Hard-coded) |
| | Unused list entry. | | | |


©2014 TEMPO SEMICONDCUTOR, INC..

| Field Name | Bits | R/W | Default | Reset |
|---|---|---|---|---|
| ConL0 | 7:0 | R | 25h | N/A (Hard-coded) |
| | SPDIFOut0 Converter widget (0x25) | | | |

### *7.29.4. Dig0Pin (NID = 22h): PwrState*

| Reg | Byte 4 (Bits 31:24) | Byte 3 (Bits 23:16) | Byte 2 (Bits 15:8) | Byte 1 (Bits 7:0) |
|---|---|---|---|---|
| Set | | | | 705h |
| Get | F0500h | | | |

| Field Name | Bits | R/W | Default | Reset |
|---|---|---|---|---|
| Rsvd4 | 31:11 | R | 000000h | N/A (Hard-coded) |
| | Reserved. | | | |
| SettingsReset | 10 | R | 1h | POR - DAFG - ULR |
| | Indicates if any persistent settings in this Widget have been reset. Cleared by PwrState 'Get', or a 'Set' to any Verb in this Widget. | | | |
| Rsvd3 | 9 | R | 0h | N/A (Hard-coded) |
| | Reserved. | | | |
| Error | 8 | R | 0h | POR - DAFG - ULR |
| | Error indicator: 1 = cannot enter requested power state, 0 = no problem with requested power state. | | | |
| Rsvd2 | 7:6 | R | 0h | N/A (Hard-coded) |
| | Reserved. | | | |
| Act | 5:4 | R | 3h | POR - DAFG - LR |
| | Actual power state of this widget. | | | |
| Rsvd1 | 3:2 | R | 0h | N/A (Hard-coded) |
| | Reserved. | | | |
| Set | 1:0 | RW | 0h | POR - DAFG - LR |
| | Current power state setting for this widget. | | | |


©2014 TEMPO SEMICONDCUTOR, INC..

### 7.29.5. Dig0Pin (NID = 22h): PinWCntrl

| Reg | Byte 4 (Bits 31:24) | Byte 3 (Bits 23:16) | Byte 2 (Bits 15:8) | Byte 1 (Bits 7:0) |
|---|---|---|---|---|
| Set | | | | 707h |
| Get | F0700h | | | |

| Field Name | Bits | R/W | Default | Reset |
|---|---|---|---|---|
| Rsvd2 | 31:7 | R | 0000000h | N/A (Hard-coded) |
| | Reserved. | | | |
| OutEn | 6 | RW | 0h | POR - DAFG - ULR |
| | Output enable: 1 = enabled, 0 = disabled. | | | |
| Rsvd1 | 5:0 | R | 00h | N/A (Hard-coded) |
| | Reserved. | | | |

### 7.29.6. Dig0Pin (NID = 22h): UnsolResp

| Reg | Byte 4 (Bits 31:24) | Byte 3 (Bits 23:16) | Byte 2 (Bits 15:8) | Byte 1 (Bits 7:0) |
|---|---|---|---|---|
| Set | | | | 708h |
| Get | F0800h | | | |

| Field Name | Bits | R/W | Default | Reset |
|---|---|---|---|---|
| Rsvd2 | 31:8 | R | 000000h | N/A (Hard-coded) |
| | Reserved. | | | |
| En | 7 | RW | 0h | POR - DAFG - ULR |
| | Unsolicited response enable (also enables Wake events for this Widget): 1 = enabled, 0 = disabled. | | | |
| Rsvd1 | 6 | R | 0h | N/A (Hard-coded) |
| | Reserved. | | | |


©2014 TEMPO SEMICONDCUTOR, INC..

| Field Name | Bits | R/W | Default | Reset |
|---|---|---|---|---|
| Tag | 5:0 | RW | 00h | POR - DAFG - ULR |
| | Software programmable field returned in top six bits (31:26) of every Unsolicited Response generated by this node. | | | |

### 7.29.7. Dig0Pin (NID = 22h): ChSense

| Reg | Byte 4 (Bits 31:24) | Byte 3 (Bits 23:16) | Byte 2 (Bits 15:8) | Byte 1 (Bits 7:0) |
|---|---|---|---|---|
| Set | | | | 709h |
| Get | F0900h | | | |

| Field Name | Bits | R/W | Default | Reset |
|---|---|---|---|---|
| PresDtct | 31 | R | 0h | POR |
| | Presence detection indicator: 1 = presence detected; 0 = presence not detected. | | | |
| Rsvd | 30:0 | R | 00000000h | N/A (Hard-coded) |
| | Reserved. | | | |

### 7.29.8. Dig0Pin (NID = 22h): ConfigDefault

| Reg | Byte 4 (Bits 31:24) | Byte 3 (Bits 23:16) | Byte 2 (Bits 15:8) | Byte 1 (Bits 7:0) |
|---|---|---|---|---|
| Set | 71Fh | 71Eh | 71Dh | 71Ch |
| Get | F1F00h / F1E00h / F1D00h / F1C00h | | | |

| Field Name | Bits | R/W | Default | Reset |
|---|---|---|---|---|
| PortConnectivity | 31:30 | RW | 0h | POR |
| | Port connectivity:<br>0h = Port complex is connected to a jack<br>1h = No physical connection for port<br>2h = Fixed function device is attached<br>3h = Both jack and internal device attached (info in all other fields refers to integrated device, any presence detection refers to jack) | | | |


©2014 TEMPO SEMICONDCUTOR, INC..

| Field Name | Bits | R/W | Default | Reset |
|---|---|---|---|---|
| Location | 29:24 | RW | 1h | POR |
| | Location<br><br>Bits [5..4]:<br>0h = External on primary chassis<br>1h = Internal<br>2h = Separate chassis<br>3h = Other<br><br>Bits [3..0]:<br>0h = N/A<br>1h = Rear<br>2h = Front<br>3h = Left<br>4h = Right<br>5h = Top<br>6h = Bottom<br>7h-9h = Special<br>Ah-Fh = Reserved | | | |
| Device | 23:20 | RW | 4h | POR |
| | Default device:<br>0h = Line out<br>1h = Speaker<br>2h = HP out<br>3h = CD<br>4h = SPDIF Out<br>5h = Digital other out<br>6h = Modem line side<br>7h = Modem handset side<br>8h = Line in<br>9h = Aux<br>Ah = Mic in<br>Bh = Telephony<br>Ch = SPDIF In<br>Dh = Digital other in<br>Eh = Reserved<br>Fh = Other | | | |


©2014 TEMPO SEMICONDCUTOR, INC..

| Field Name | Bits | R/W | Default | Reset |
|---|---|---|---|---|
| ConnectionType | 19:16 | RW | 5h | POR |
| | Connection type:<br>0h = Unknown<br>1h = 1/8" stereo/mono<br>2h = 1/4" stereo/mono<br>3h = ATAPI internal<br>4h = RCA<br>5h = Optical<br>6h = Other digital<br>7h = Other analog<br>8h = Multichannel analog (DIN)<br>9h = XLR/Professional<br>Ah = RJ-11 (modem)<br>Bh = Combination<br>Ch-Eh = Reserved<br>Fh = Other | | | |
| Color | 15:12 | RW | 1h | POR |
| | Color:<br>0h = Unknown<br>1h = Black<br>2h = Grey<br>3h = Blue<br>4h = Green<br>5h = Red<br>6h = Orange<br>7h = Yellow<br>8h = Purple<br>9h = Pink<br>Ah-Dh = Reserved<br>Eh = White<br>Fh = Other | | | |
| Misc | 11:8 | RW | 1h | POR |
| | Miscellaneous:<br>Bits [3..1] = Reserved<br>Bit 0 = Jack detect override | | | |
| Association | 7:4 | RW | 5h | POR |
| | Default assocation. | | | |
| Sequence | 3:0 | RW | 0h | POR |
| | Sequence. | | | |


©2014 TEMPO SEMICONDCUTOR, INC..

## 7.30. Dig1Pin (NID = 23h): WCap

| Reg | Byte 4 (Bits 31:24) | Byte 3 (Bits 23:16) | Byte 2 (Bits 15:8) | Byte 1 (Bits 7:0) |
|---|---|---|---|---|
| Set | | | | |
| Get | F0009h | | | |

| Field Name | Bits | R/W | Default | Reset |
|---|---|---|---|---|
| Rsvd2 | 31:24 | R | 00h | N/A (Hard-coded) |
| | Reserved. | | | |
| Type | 23:20 | R | 4h | N/A (Hard-coded) |
| | Widget type:<br>0h = Out Converter<br>1h = In Converter<br>2h = Summing (Mixer)<br>3h = Selector (Mux)<br>4h = Pin Complex<br>5h = Power<br>6h = Volume Knob<br>7h = Beep Generator<br>8h-Eh = Reserved<br>Fh = Vendor Defined | | | |
| Delay | 19:16 | R | 0h | N/A (Hard-coded) |
| | Number of sample delays through widget. | | | |
| Rsvd1 | 15:12 | R | 0h | N/A (Hard-coded) |
| | Reserved. | | | |
| SwapCap | 11 | R | 0h | N/A (Hard-coded) |
| | Left/right swap support: 1 = yes, 0 = no. | | | |
| PwrCntrl | 10 | R | 1h | N/A (Hard-coded) |
| | Power state support: 1 = yes, 0 = no. | | | |
| Dig | 9 | R | 1h | N/A (Hard-coded) |
| | Digital stream support: 1 = yes (digital), 0 = no (analog). | | | |
| ConnList | 8 | R | 1h | N/A (Hard-coded) |
| | Connection list present: 1 = yes, 0 = no. | | | |


©2014 TEMPO SEMICONDCUTOR, INC..

| Field Name | Bits | R/W | Default | Reset |
|---|---|---|---|---|
| UnSolCap | 7 | R | 1h | N/A (Hard-coded) |
| | Unsolicited response support: 1 = yes, 0 = no. | | | |
| ProcWidget | 6 | R | 0h | N/A (Hard-coded) |
| | Processing state support: 1 = yes, 0 = no. | | | |
| Stripe | 5 | R | 0h | N/A (Hard-coded) |
| | Striping support: 1 = yes, 0 = no. | | | |
| FormatOvrd | 4 | R | 0h | N/A (Hard-coded) |
| | Stream format override: 1 = yes, 0 = no. | | | |
| AmpParOvrd | 3 | R | 0h | N/A (Hard-coded) |
| | Amplifier capabilities override: 1 = yes, no. | | | |
| OutAmpPrsnt | 2 | R | 0h | N/A (Hard-coded) |
| | Output amp present: 1 = yes, 0 = no. | | | |
| InAmpPrsnt | 1 | R | 0h | N/A (Hard-coded) |
| | Input amp present: 1 = yes, 0 = no. | | | |
| Stereo | 0 | R | 1h | N/A (Hard-coded) |
| | Stereo stream support: 1 = yes (stereo), 0 = no (mono). | | | |

### *7.30.1. Dig1Pin (NID = 23h): PinCap*

| Reg | Byte 4 (Bits 31:24) | Byte 3 (Bits 23:16) | Byte 2 (Bits 15:8) | Byte 1 (Bits 7:0) |
|---|---|---|---|---|
| Set | | | | |
| Get | F000Ch | | | |

| Field Name | Bits | R/W | Default | Reset |
|---|---|---|---|---|
| Rsvd2 | 31:17 | R | 0000h | N/A (Hard-coded) |
| | Reserved. | | | |


©2014 TEMPO SEMICONDCUTOR, INC..

| Field Name | Bits | R/W | Default | Reset |
|---|---|---|---|---|
| EapdCap | 16 | R | 0h | N/A (Hard-coded) |
| | EAPD support: 1 = yes, 0 = no. | | | |
| VrefCntrl | 15:8 | R | 00h | N/A (Hard-coded) |
| | Vref support:<br>bit 7 = Reserved<br>bit 6 = Reserved<br>bit 5 = 100% support (1 = yes, 0 = no)<br>bit 4 = 80% support (1 = yes, 0 = no)<br>bit 3 = Reserved<br>bit 2 = GND support (1 = yes, 0 = no)<br>bit 1 = 50% support (1 = yes, 0 = no)<br>bit 0 = Hi-Z support (1 = yes, 0 = no) | | | |
| Rsvd1 | 7 | R | 0h | N/A (Hard-coded) |
| | Reserved. | | | |
| BalancedIO | 6 | R | 0h | N/A (Hard-coded) |
| | Balanced I/O support: 1 = yes, 0 = no. | | | |
| InCap | 5 | R | 1h | N/A (Hard-coded) |
| | Input support: 1 = yes, 0 = no. | | | |
| OutCap | 4 | R | 1h | N/A (Hard-coded) |
| | Output support: 1 = yes, 0 = no. | | | |
| HdphDrvCap | 3 | R | 0h | N/A (Hard-coded) |
| | Headphone amp present: 1 = yes, 0 = no. | | | |
| PresDtctCap | 2 | R | 1h | N/A (Hard-coded) |
| | Presence detection support: 1 = yes, 0 = no. | | | |
| TrigRqd | 1 | R | 0h | N/A (Hard-coded) |
| | Trigger required for impedance sense: 1 = yes, 0 = no. | | | |
| ImpSenseCap | 0 | R | 0h | N/A (Hard-coded) |
| | Impedance sense support: 1 = yes, 0 = no. | | | |


©2014 TEMPO SEMICONDCUTOR, INC..

### *7.30.2. Dig1Pin (NID = 23h): ConLst*

| Reg | Byte 4 (Bits 31:24) | Byte 3 (Bits 23:16) | Byte 2 (Bits 15:8) | Byte 1 (Bits 7:0) |
|---|---|---|---|---|
| Set | | | | |
| Get | F000Eh | | | |

| Field Name | Bits | R/W | Default | Reset |
|---|---|---|---|---|
| Rsvd | 31:8 | R | 000000h | N/A (Hard-coded) |
| | Reserved. | | | |
| LForm | 7 | R | 0h | N/A (Hard-coded) |
| | Connection list format: 1 = long-form (15-bit) NID entries, 0 = short-form (7-bit) NID entries. | | | |
| ConL | 6:0 | R | 01h | N/A (Hard-coded) |
| | Number of NID entries in connection list. | | | |

### *7.30.3. Dig1Pin (NID = 20h): ConLstEntry0*

| Reg | Byte 4 (Bits 31:24) | Byte 3 (Bits 23:16) | Byte 2 (Bits 15:8) | Byte 1 (Bits 7:0) |
|---|---|---|---|---|
| Set | | | | |
| Get | F0200h | | | |

| Field Name | Bits | R/W | Default | Reset |
|---|---|---|---|---|
| ConL3 | 31:24 | R | 00h | N/A (Hard-coded) |
| | Unused list entry. | | | |
| ConL2 | 23:16 | R | 00h | N/A (Hard-coded) |
| | Unused list entry. | | | |
| ConL1 | 15:8 | R | 00h | N/A (Hard-coded) |
| | Unused list entry. | | | |


©2014 TEMPO SEMICONDCUTOR, INC..

| Field Name | Bits | R/W | Default | Reset |
|---|---|---|---|---|
| ConL0 | 7:0 | R | 26h | N/A (Hard-coded) |
| | SPDIFOut1 Converter widget (0x26) | | | |

### *7.30.4. Dig1Pin (NID = 23h): PwrState*

| Reg | Byte 4 (Bits 31:24) | Byte 3 (Bits 23:16) | Byte 2 (Bits 15:8) | Byte 1 (Bits 7:0) |
|---|---|---|---|---|
| Set | | | | 705h |
| Get | F0500h | | | |

| Field Name | Bits | R/W | Default | Reset |
|---|---|---|---|---|
| Rsvd4 | 31:11 | R | 000000h | N/A (Hard-coded) |
| | Reserved. | | | |
| SettingsReset | 10 | R | 1h | POR - DAFG - ULR |
| | Indicates if any persistent settings in this Widget have been reset. Cleared by PwrState 'Get', or a 'Set' to any Verb in this Widget. | | | |
| Rsvd3 | 9 | R | 0h | N/A (Hard-coded) |
| | Reserved. | | | |
| Error | 8 | R | 0h | POR - DAFG - ULR |
| | Error indicator: 1 = cannot enter requested power state, 0 = no problem with requested power state. | | | |
| Rsvd2 | 7:6 | R | 0h | N/A (Hard-coded) |
| | Reserved. | | | |
| Act | 5:4 | R | 3h | POR - DAFG - LR |
| | Actual power state of this widget. | | | |
| Rsvd1 | 3:2 | R | 0h | N/A (Hard-coded) |
| | Reserved. | | | |
| Set | 1:0 | RW | 0h | POR - DAFG - LR |
| | Current power state setting for this widget. | | | |


©2014 TEMPO SEMICONDCUTOR, INC..

### 7.30.5. Dig1Pin (NID = 23h): PinWCntrl

| Reg | Byte 4 (Bits 31:24) | Byte 3 (Bits 23:16) | Byte 2 (Bits 15:8) | Byte 1 (Bits 7:0) |
|---|---|---|---|---|
| Set | | | | 707h |
| Get | F0700h | | | |

| Field Name | Bits | R/W | Default | Reset |
|---|---|---|---|---|
| Rsvd2 | 31:7 | R | 0000000h | N/A (Hard-coded) |
| | Reserved. | | | |
| OutEn | 6 | RW | 0h | POR - DAFG - ULR |
| | Output enable: 1 = enabled, 0 = disabled. | | | |
| InEn | 5 | RW | 0h | POR - DAFG - ULR |
| | Input enable: 1 = enabled, 0 = disabled. | | | |
| Rsvd1 | 4:0 | R | 00h | N/A (Hard-coded) |
| | Reserved. | | | |

### 7.30.6. Dig1Pin (NID = 20h): ConfigDefault

| Reg | Byte 4 (Bits 31:24) | Byte 3 (Bits 23:16) | Byte 2 (Bits 15:8) | Byte 1 (Bits 7:0) |
|---|---|---|---|---|
| Set | 71Fh | 71Eh | 71Dh | 71Ch |
| Get | F1F00h / F1E00h / F1D00h / F1C00h | | | |

| Field Name | Bits | R/W | Default | Reset |
|---|---|---|---|---|
| PortConnectivity | 31:30 | RW | 2h | POR |
| | Port connectivity:<br>0h = Port complex is connected to a jack<br>1h = No physical connection for port<br>2h = Fixed function device is attached<br>3h = Both jack and internal device attached (info in all other fields refers to integrated device, any presence detection refers to jack) | | | |


©2014 TEMPO SEMICONDCUTOR, INC..

| Field Name | Bits | R/W | Default | Reset |
|---|---|---|---|---|
| Location | 29:24 | RW | 18h | POR |
| | Location<br><br>Bits [5..4]:<br>0h = External on primary chassis<br>1h = Internal<br>2h = Separate chassis<br>3h = Other<br><br>Bits [3..0]:<br>0h = N/A<br>1h = Rear<br>2h = Front<br>3h = Left<br>4h = Right<br>5h = Top<br>6h = Bottom<br>7h-9h = Special<br>Ah-Fh = Reserved | | | |
| Device | 23:20 | RW | 5h | POR |
| | Default device:<br>0h = Line out<br>1h = Speaker<br>2h = HP out<br>3h = CD<br>4h = SPDIF Out<br>5h = Digital other out<br>6h = Modem line side<br>7h = Modem handset side<br>8h = Line in<br>9h = Aux<br>Ah = Mic in<br>Bh = Telephony<br>Ch = SPDIF In<br>Dh = Digital other in<br>Eh = Reserved<br>Fh = Other | | | |


©2014 TEMPO SEMICONDCUTOR, INC..

| Field Name | Bits | R/W | Default | Reset |
|---|---|---|---|---|
| ConnectionType | 19:16 | RW | 6h | POR |
| | Connection type:<br>0h = Unknown<br>1h = 1/8" stereo/mono<br>2h = 1/4" stereo/mono<br>3h = ATAPI internal<br>4h = RCA<br>5h = Optical<br>6h = Other digital<br>7h = Other analog<br>8h = Multichannel analog (DIN)<br>9h = XLR/Professional<br>Ah = RJ-11 (modem)<br>Bh = Combination<br>Ch-Eh = Reserved<br>Fh = Other | | | |
| Color | 15:12 | RW | 0h | POR |
| | Color:<br>0h = Unknown<br>1h = Black<br>2h = Grey<br>3h = Blue<br>4h = Green<br>5h = Red<br>6h = Orange<br>7h = Yellow<br>8h = Purple<br>9h = Pink<br>Ah-Dh = Reserved<br>Eh = White<br>Fh = Other | | | |
| Misc | 11:8 | RW | 1h | POR |
| | Miscellaneous:<br>Bits [3..1] = Reserved<br>Bit 0 = Jack detect override | | | |
| Association | 7:4 | RW | 6h | POR |
| | Default assocation. | | | |
| Sequence | 3:0 | RW | 0h | POR |
| | Sequence. | | | |


©2014 TEMPO SEMICONDCUTOR, INC..

## 7.31. Dig2Pin (NID = 24h): WCap

| Reg | Byte 4 (Bits 31:24) | Byte 3 (Bits 23:16) | Byte 2 (Bits 15:8) | Byte 1 (Bits 7:0) |
|---|---|---|---|---|
| Set | | | | |
| Get | F0009h | | | |

| Field Name | Bits | R/W | Default | Reset |
|---|---|---|---|---|
| Rsvd2 | 31:24 | R | 00h | N/A (Hard-coded) |
| | Reserved. | | | |
| Type | 23:20 | R | 4h | N/A (Hard-coded) |
| | Widget type:<br>0h = Out Converter<br>1h = In Converter<br>2h = Summing (Mixer)<br>3h = Selector (Mux)<br>4h = Pin Complex<br>5h = Power<br>6h = Volume Knob<br>7h = Beep Generator<br>8h-Eh = Reserved<br>Fh = Vendor Defined | | | |
| Delay | 19:16 | R | 0h | N/A (Hard-coded) |
| | Number of sample delays through widget. | | | |
| Rsvd1 | 15:12 | R | 0h | N/A (Hard-coded) |
| | Reserved. | | | |
| SwapCap | 11 | R | 0h | N/A (Hard-coded) |
| | Left/right swap support: 1 = yes, 0 = no. | | | |
| PwrCntrl | 10 | R | 1h | N/A (Hard-coded) |
| | Power state support: 1 = yes, 0 = no. | | | |
| Dig | 9 | R | 1h | N/A (Hard-coded) |
| | Digital stream support: 1 = yes (digital), 0 = no (analog). | | | |
| ConnList | 8 | R | 1h | N/A (Hard-coded) |
| | Connection list present: 1 = yes, 0 = no. | | | |


©2014 TEMPO SEMICONDCUTOR, INC..

| Field Name | Bits | R/W | Default | Reset |
|---|---|---|---|---|
| UnSolCap | 7 | R | 1h | N/A (Hard-coded) |
| | Unsolicited response support: 1 = yes, 0 = no. | | | |
| ProcWidget | 6 | R | 0h | N/A (Hard-coded) |
| | Processing state support: 1 = yes, 0 = no. | | | |
| Stripe | 5 | R | 0h | N/A (Hard-coded) |
| | Striping support: 1 = yes, 0 = no. | | | |
| FormatOvrd | 4 | R | 0h | N/A (Hard-coded) |
| | Stream format override: 1 = yes, 0 = no. | | | |
| AmpParOvrd | 3 | R | 0h | N/A (Hard-coded) |
| | Amplifier capabilities override: 1 = yes, no. | | | |
| OutAmpPrsnt | 2 | R | 0h | N/A (Hard-coded) |
| | Output amp present: 1 = yes, 0 = no. | | | |
| InAmpPrsnt | 1 | R | 0h | N/A (Hard-coded) |
| | Input amp present: 1 = yes, 0 = no. | | | |
| Stereo | 0 | R | 1h | N/A (Hard-coded) |
| | Stereo stream support: 1 = yes (stereo), 0 = no (mono). | | | |

### *7.31.1. Dig2Pin (NID = 24h): PinCap*

| Reg | Byte 4 (Bits 31:24) | Byte 3 (Bits 23:16) | Byte 2 (Bits 15:8) | Byte 1 (Bits 7:0) |
|---|---|---|---|---|
| Set | | | | |
| Get | F000Ch | | | |

| Field Name | Bits | R/W | Default | Reset |
|---|---|---|---|---|
| Rsvd2 | 31:17 | R | 0000h | N/A (Hard-coded) |
| | Reserved. | | | |


©2014 TEMPO SEMICONDCUTOR, INC..

| Field Name | Bits | R/W | Default | Reset |
|---|---|---|---|---|
| EapdCap | 16 | R | 0h | N/A (Hard-coded) |
| | EAPD support: 1 = yes, 0 = no. | | | |
| VrefCntrl | 15:8 | R | 00h | N/A (Hard-coded) |
| | Vref support:<br>bit 7 = Reserved<br>bit 6 = Reserved<br>bit 5 = 100% support (1 = yes, 0 = no)<br>bit 4 = 80% support (1 = yes, 0 = no)<br>bit 3 = Reserved<br>bit 2 = GND support (1 = yes, 0 = no)<br>bit 1 = 50% support (1 = yes, 0 = no)<br>bit 0 = Hi-Z support (1 = yes, 0 = no) | | | |
| Rsvd1 | 7 | R | 0h | N/A (Hard-coded) |
| | Reserved. | | | |
| BalancedIO | 6 | R | 0h | N/A (Hard-coded) |
| | Balanced I/O support: 1 = yes, 0 = no. | | | |
| InCap | 5 | R | 1h | N/A (Hard-coded) |
| | Input support: 1 = yes, 0 = no. | | | |
| OutCap | 4 | R | 1h | N/A (Hard-coded) |
| | Output support: 1 = yes, 0 = no. | | | |
| HdphDrvCap | 3 | R | 0h | N/A (Hard-coded) |
| | Headphone amp present: 1 = yes, 0 = no. | | | |
| PresDtctCap | 2 | R | 1h | N/A (Hard-coded) |
| | Presence detection support: 1 = yes, 0 = no. | | | |
| TrigRqd | 1 | R | 0h | N/A (Hard-coded) |
| | Trigger required for impedance sense: 1 = yes, 0 = no. | | | |
| ImpSenseCap | 0 | R | 0h | N/A (Hard-coded) |
| | Impedance sense support: 1 = yes, 0 = no. | | | |


©2014 TEMPO SEMICONDCUTOR, INC..

### 7.31.2. Dig2Pin (NID = 24h): ConLst

| Reg | Byte 4 (Bits 31:24) | Byte 3 (Bits 23:16) | Byte 2 (Bits 15:8) | Byte 1 (Bits 7:0) |
|---|---|---|---|---|
| Set | | | | |
| Get | F000Eh | | | |

| Field Name | Bits | R/W | Default | Reset |
|---|---|---|---|---|
| Rsvd | 31:8 | R | 000000h | N/A (Hard-coded) |
| | Reserved. | | | |
| LForm | 7 | R | 0h | N/A (Hard-coded) |
| | Connection list format: 1 = long-form (15-bit) NID entries, 0 = short-form (7-bit) NID entries. | | | |
| ConL | 6:0 | R | 01h | N/A (Hard-coded) |
| | Number of NID entries in connection list. | | | |

### 7.31.3. Dig1Pin (NID = 20h): ConLstEntry0

| Reg | Byte 4 (Bits 31:24) | Byte 3 (Bits 23:16) | Byte 2 (Bits 15:8) | Byte 1 (Bits 7:0) |
|---|---|---|---|---|
| Set | | | | |
| Get | F0200h | | | |

| Field Name | Bits | R/W | Default | Reset |
|---|---|---|---|---|
| ConL3 | 31:24 | R | 00h | N/A (Hard-coded) |
| | Unused list entry. | | | |
| ConL2 | 23:16 | R | 00h | N/A (Hard-coded) |
| | Unused list entry. | | | |
| ConL1 | 15:8 | R | 00h | N/A (Hard-coded) |
| | Unused list entry. | | | |


©2014 TEMPO SEMICONDCUTOR, INC..

| Field Name | Bits | R/W | Default | Reset |
|---|---|---|---|---|
| ConL0 | 7:0 | R | 26h | N/A (Hard-coded) |
| | SPDIFOut1 Converter widget (0x26) | | | |

### *7.31.4. Dig2Pin (NID = 24h): PwrState*

| Reg | Byte 4 (Bits 31:24) | Byte 3 (Bits 23:16) | Byte 2 (Bits 15:8) | Byte 1 (Bits 7:0) |
|---|---|---|---|---|
| Set | | | | 705h |
| Get | F0500h | | | |

| Field Name | Bits | R/W | Default | Reset |
|---|---|---|---|---|
| Rsvd4 | 31:11 | R | 000000h | N/A (Hard-coded) |
| | Reserved. | | | |
| SettingsReset | 10 | R | 1h | POR - DAFG - ULR |
| | Indicates if any persistent settings in this Widget have been reset. Cleared by PwrState 'Get', or a 'Set' to any Verb in this Widget. | | | |
| Rsvd3 | 9 | R | 0h | N/A (Hard-coded) |
| | Reserved. | | | |
| Error | 8 | R | 0h | POR - DAFG - ULR |
| | Error indicator: 1 = cannot enter requested power state, 0 = no problem with requested power state. | | | |
| Rsvd2 | 7:6 | R | 0h | N/A (Hard-coded) |
| | Reserved. | | | |
| Act | 5:4 | R | 3h | POR - DAFG - LR |
| | Actual power state of this widget. | | | |
| Rsvd1 | 3:2 | R | 0h | N/A (Hard-coded) |
| | Reserved. | | | |
| Set | 1:0 | RW | 0h | POR - DAFG - LR |
| | Current power state setting for this widget. | | | |


©2014 TEMPO SEMICONDCUTOR, INC..

### 7.31.5. Dig2Pin (NID = 24h): PinWCntrl

| Reg | Byte 4 (Bits 31:24) | Byte 3 (Bits 23:16) | Byte 2 (Bits 15:8) | Byte 1 (Bits 7:0) |
|---|---|---|---|---|
| Set | | | | 707h |
| Get | F0700h | | | |

| Field Name | Bits | R/W | Default | Reset |
|---|---|---|---|---|
| Rsvd2 | 31:7 | R | 0000000h | N/A (Hard-coded) |
| | Reserved. | | | |
| OutEn | 6 | RW | 0h | POR - DAFG - ULR |
| | Output enable: 1 = enabled, 0 = disabled. | | | |
| InEn | 5 | RW | 0h | POR - DAFG - ULR |
| | Input enable: 1 = enabled, 0 = disabled. | | | |
| Rsvd1 | 4:0 | R | 00h | N/A (Hard-coded) |
| | Reserved. | | | |

### 7.31.6. Dig1Pin (NID = 20h): ConfigDefault

| Reg | Byte 4 (Bits 31:24) | Byte 3 (Bits 23:16) | Byte 2 (Bits 15:8) | Byte 1 (Bits 7:0) |
|---|---|---|---|---|
| Set | 71Fh | 71Eh | 71Dh | 71Ch |
| Get | F1F00h / F1E00h / F1D00h / F1C00h | | | |

| Field Name | Bits | R/W | Default | Reset |
|---|---|---|---|---|
| PortConnectivity | 31:30 | RW | 2h | POR |
| | Port connectivity:<br>0h = Port complex is connected to a jack<br>1h = No physical connection for port<br>2h = Fixed function device is attached<br>3h = Both jack and internal device attached (info in all other fields refers to integrated device, any presence detection refers to jack) | | | |


©2014 TEMPO SEMICONDCUTOR, INC..

| Field Name | Bits | R/W | Default | Reset |
|---|---|---|---|---|
| Location | 29:24 | RW | 01h | POR |
| | Location<br><br>Bits [5..4]:<br>0h = External on primary chassis<br>1h = Internal<br>2h = Separate chassis<br>3h = Other<br><br>Bits [3..0]:<br>0h = N/A<br>1h = Rear<br>2h = Front<br>3h = Left<br>4h = Right<br>5h = Top<br>6h = Bottom<br>7h-9h = Special<br>Ah-Fh = Reserved | | | |
| Device | 23:20 | RW | Ch | POR |
| | Default device:<br>0h = Line out<br>1h = Speaker<br>2h = HP out<br>3h = CD<br>4h = SPDIF Out<br>5h = Digital other out<br>6h = Modem line side<br>7h = Modem handset side<br>8h = Line in<br>9h = Aux<br>Ah = Mic in<br>Bh = Telephony<br>Ch = SPDIF In<br>Dh = Digital other in<br>Eh = Reserved<br>Fh = Other | | | |


©2014 TEMPO SEMICONDCUTOR, INC..

| Field Name | Bits | R/W | Default | Reset |
|---|---|---|---|---|
| ConnectionType | 19:16 | RW | 5h | POR |
| | Connection type:<br>0h = Unknown<br>1h = 1/8" stereo/mono<br>2h = 1/4" stereo/mono<br>3h = ATAPI internal<br>4h = RCA<br>5h = Optical<br>6h = Other digital<br>7h = Other analog<br>8h = Multichannel analog (DIN)<br>9h = XLR/Professional<br>Ah = RJ-11 (modem)<br>Bh = Combination<br>Ch-Eh = Reserved<br>Fh = Other | | | |
| Color | 15:12 | RW | 2h | POR |
| | Color:<br>0h = Unknown<br>1h = Black<br>2h = Grey<br>3h = Blue<br>4h = Green<br>5h = Red<br>6h = Orange<br>7h = Yellow<br>8h = Purple<br>9h = Pink<br>Ah-Dh = Reserved<br>Eh = White<br>Fh = Other | | | |
| Misc | 11:8 | RW | 1h | POR |
| | Miscellaneous:<br>Bits [3..1] = Reserved<br>Bit 0 = Jack detect override | | | |
| Association | 7:4 | RW | 7h | POR |
| | Default assocation. | | | |
| Sequence | 3:0 | RW | 0h | POR |
| | Sequence. | | | |


©2014 TEMPO SEMICONDCUTOR, INC..

## 7.32. SPDIFOut0 (NID = 25h): WCap

| Reg | Byte 4 (Bits 31:24) | Byte 3 (Bits 23:16) | Byte 2 (Bits 15:8) | Byte 1 (Bits 7:0) |
|---|---|---|---|---|
| Set | | | | |
| Get | F0009h | | | |

| Field Name | Bits | R/W | Default | Reset |
|---|---|---|---|---|
| Rsvd2 | 31:24 | R | 00h | N/A (Hard-coded) |
| | Reserved. | | | |
| Type | 23:20 | R | 0h | N/A (Hard-coded) |
| | Widget type:<br>0h = Out Converter<br>1h = In Converter<br>2h = Summing (Mixer)<br>3h = Selector (Mux)<br>4h = Pin Complex<br>5h = Power<br>6h = Volume Knob<br>7h = Beep Generator<br>8h-Eh = Reserved<br>Fh = Vendor Defined | | | |
| Delay | 19:16 | R | 4h | N/A (Hard-coded) |
| | Number of sample delays through widget. | | | |
| Rsvd1 | 15:12 | R | 0h | N/A (Hard-coded) |
| | Reserved. | | | |
| SwapCap | 11 | R | 0h | N/A (Hard-coded) |
| | Left/right swap support: 1 = yes, 0 = no. | | | |
| PwrCntrl | 10 | R | 1h | N/A (Hard-coded) |
| | Power state support: 1 = yes, 0 = no. | | | |
| Dig | 9 | R | 1h | N/A (Hard-coded) |
| | Digital stream support: 1 = yes (digital), 0 = no (analog). | | | |
| ConnList | 8 | R | 0h | N/A (Hard-coded) |
| | Connection list present: 1 = yes, 0 = no. | | | |


©2014 TEMPO SEMICONDCUTOR, INC..

| Field Name | Bits | R/W | Default | Reset |
|---|---|---|---|---|
| UnSolCap | 7 | R | 0h | N/A (Hard-coded) |
| | Unsolicited response support: 1 = yes, 0 = no. | | | |
| ProcWidget | 6 | R | 0h | N/A (Hard-coded) |
| | Processing state support: 1 = yes, 0 = no. | | | |
| Stripe | 5 | R | 0h | N/A (Hard-coded) |
| | Striping support: 1 = yes, 0 = no. | | | |
| FormatOvrd | 4 | R | 1h | N/A (Hard-coded) |
| | Stream format override: 1 = yes, 0 = no. | | | |
| AmpParOvrd | 3 | R | 1h | N/A (Hard-coded) |
| | Amplifier capabilities override: 1 = yes, no. | | | |
| OutAmpPrsnt | 2 | R | 1h | N/A (Hard-coded) |
| | Output amp present: 1 = yes, 0 = no. | | | |
| InAmpPrsnt | 1 | R | 0h | N/A (Hard-coded) |
| | Input amp present: 1 = yes, 0 = no. | | | |
| Stereo | 0 | R | 1h | N/A (Hard-coded) |
| | Stereo stream support: 1 = yes (stereo), 0 = no (mono). | | | |

### *7.32.1. SPDIFOut0 (NID = 25h): PCMCap*

| Reg | Byte 4 (Bits 31:24) | Byte 3 (Bits 23:16) | Byte 2 (Bits 15:8) | Byte 1 (Bits 7:0) |
|---|---|---|---|---|
| Set | | | | |
| Get | F000Ah | | | |

| Field Name | Bits | R/W | Default | Reset |
|---|---|---|---|---|
| Rsvd2 | 31:21 | R | 000h | N/A (Hard-coded) |
| | Reserved. | | | |


©2014 TEMPO SEMICONDCUTOR, INC..

| Field Name | Bits | R/W | Default | Reset |
|---|---|---|---|---|
| B32 | 20 | R | 0h | N/A (Hard-coded) |
| | 32 bit audio format support: 1 = yes, 0 = no. | | | |
| B24 | 19 | R | 1h | N/A (Hard-coded) |
| | 24 bit audio format support: 1 = yes, 0 = no. | | | |
| B20 | 18 | R | 1h | N/A (Hard-coded) |
| | 20 bit audio format support: 1 = yes, 0 = no. | | | |
| B16 | 17 | R | 1h | N/A (Hard-coded) |
| | 16 bit audio format support: 1 = yes, 0 = no. | | | |
| B8 | 16 | R | 0h | N/A (Hard-coded) |
| | 8 bit audio format support: 1 = yes, 0 = no. | | | |
| Rsvd1 | 15:12 | R | 0h | N/A (Hard-coded) |
| | Reserved. | | | |
| R12 | 11 | R | 0h | N/A (Hard-coded) |
| | 384kHz rate support: 1 = yes, 0 = no. | | | |
| R11 | 10 | R | 1h | N/A (Hard-coded) |
| | 192kHz rate support: 1 = yes, 0 = no. | | | |
| R10 | 9 | R | 0h | N/A (Hard-coded) |
| | 176.4kHz rate support: 1 = yes, 0 = no. | | | |
| R9 | 8 | R | 1h | N/A (Hard-coded) |
| | 96kHz rate support: 1 = yes, 0 = no. | | | |
| R8 | 7 | R | 1h | N/A (Hard-coded) |
| | 88.2kHz rate support: 1 = yes, 0 = no. | | | |
| R7 | 6 | R | 1h | N/A (Hard-coded) |
| | 48kHz rate support: 1 = yes, 0 = no. | | | |
| R6 | 5 | R | 1h | N/A (Hard-coded) |
| | 44.1kHz rate support: 1 = yes, 0 = no. | | | |


©2014 TEMPO SEMICONDCUTOR, INC..

| Field Name | Bits | R/W | Default | Reset |
|---|---|---|---|---|
| R5 | 4 | R | 0h | N/A (Hard-coded) |
| | 32kHz rate support: 1 = yes, 0 = no. | | | |
| R4 | 3 | R | 0h | N/A (Hard-coded) |
| | 22.05kHz rate support: 1 = yes, 0 = no. | | | |
| R3 | 2 | R | 0h | N/A (Hard-coded) |
| | 16kHz rate support: 1 = yes, 0 = no. | | | |
| R2 | 1 | R | 0h | N/A (Hard-coded) |
| | 11.025kHz rate support: 1 = yes, 0 = no. | | | |
| R1 | 0 | R | 0h | N/A (Hard-coded) |
| | 8kHz rate support: 1 = yes, 0 = no. | | | |

### *7.32.2. SPDIFOut0 (NID = 25h): StreamCap*

| Reg | Byte 4 (Bits 31:24) | Byte 3 (Bits 23:16) | Byte 2 (Bits 15:8) | Byte 1 (Bits 7:0) |
|---|---|---|---|---|
| Set | | | | |
| Get | F000Bh | | | |

| Field Name | Bits | R/W | Default | Reset |
|---|---|---|---|---|
| Rsvd | 31:3 | R | 00000000h | N/A (Hard-coded) |
| | Reserved. | | | |
| AC3 | 2 | R | 1h | N/A (Hard-coded) |
| | AC-3 formatted data support: 1 = yes, 0 = no. | | | |
| Float32 | 1 | R | 0h | N/A (Hard-coded) |
| | Float32 formatted data support: 1 = yes, 0 = no. | | | |
| PCM | 0 | R | 1h | N/A (Hard-coded) |
| | PCM-formatted data support: 1 = yes, 0 = no. | | | |


©2014 TEMPO SEMICONDCUTOR, INC..

### *7.32.3. SPDIFOut0 (NID = 25h): OutAmpCap*

| Reg | Byte 4 (Bits 31:24) | Byte 3 (Bits 23:16) | Byte 2 (Bits 15:8) | Byte 1 (Bits 7:0) |
|---|---|---|---|---|
| Set | | | | |
| Get | F0012h | | | |

| Field Name | Bits | R/W | Default | Reset |
|---|---|---|---|---|
| Mute | 31 | R | 1h | N/A (Hard-coded) |
| | Mute support: 1 = yes, 0 = no. | | | |
| Rsvd3 | 30:23 | R | 00h | N/A (Hard-coded) |
| | Reserved. | | | |
| StepSize | 22:16 | R | 00h | N/A (Hard-coded) |
| | Size of each step in the gain range: 0 to 127 = .25dB to 32dB, in .25dB steps. | | | |
| Rsvd2 | 15 | R | 0h | N/A (Hard-coded) |
| | Reserved. | | | |
| NumSteps | 14:8 | R | 00h | N/A (Hard-coded) |
| | Number of gains steps (number of possible settings - 1). | | | |
| Rsvd1 | 7 | R | 0h | N/A (Hard-coded) |
| | Reserved. | | | |
| Offset | 6:0 | R | 00h | N/A (Hard-coded) |
| | Indicates which step is 0dB | | | |

### *7.32.4. SPDIFOut0 (NID = 25h): Cnvtr*

| Reg | Byte 4 (Bits 31:24) | Byte 3 (Bits 23:16) | Byte 2 (Bits 15:8) | Byte 1 (Bits 7:0) |
|---|---|---|---|---|
| Set | | | 2h | |
| Get | A0000h | | | |


©2014 TEMPO SEMICONDCUTOR, INC..

| Field Name | Bits | R/W | Default | Reset |
|---|---|---|---|---|
| Rsvd2 | 31:16 | R | 0000h | N/A (Hard-coded) |
| | Reserved. | | | |
| FrmtNonPCM | 15 | RW | 0h | POR - DAFG - ULR |
| | Stream type: 1 = Non-PCM, 0 = PCM. | | | |
| FrmtSmplRate | 14 | RW | 0h | POR - DAFG - ULR |
| | Sample base rate: 1 = 44.1kHz, 0 = 48kHz. | | | |
| SmplRateMultp | 13:11 | RW | 0h | POR - DAFG - ULR |
| | Sample base rate multiple:<br>000b= x1 (48kHz/44.1kHz or less)<br>001b= x2 (96kHz/88.2kHz/32kHz)<br>010b= x3 (144kHz)<br>011b= x4 (192kHz/176.4kHz)<br>100b-111b Reserved | | | |
| SmplRateDiv | 10:8 | RW | 0h | POR - DAFG - ULR |
| | Sample base rate divider:<br>000b= Divide by 1 (48kHz/44.1kHz)<br>001b= Divide by 2 (24kHz/20.05kHz)<br>010b= Divide by 3 (16kHz/32kHz)<br>011b= Divide by 4 (11.025kHz)<br>100b= Divide by 5 (9.6kHz)<br>101b= Divide by 6 (8kHz)<br>110b= Divide by 7<br>111b= Divide by 8 (6kHz) | | | |
| Rsvd1 | 7 | R | 0h | N/A (Hard-coded) |
| | Reserved. | | | |
| BitsPerSmpl | 6:4 | RW | 3h | POR - DAFG - ULR |
| | Bits per sample:<br>000b= 8 bits<br>001b= 16 bits<br>010b= 20 bits<br>011b= 24 bits<br>100b= 32 bits<br>101b-111b= Reserved | | | |


©2014 TEMPO SEMICONDCUTOR, INC..

| Field Name | Bits | R/W | Default | Reset |
|---|---|---|---|---|
| NmbrChan | 3:0 | RW | 1h | POR - DAFG - ULR |
| | Total number of channels in the stream assigned to this converter: 0000b-1111b= 1-16 channels. | | | |

### 7.32.5. SPDIFOut0 (NID = 25h): OutAmpLeft

| Reg | Byte 4 (Bits 31:24) | Byte 3 (Bits 23:16) | Byte 2 (Bits 15:8) | Byte 1 (Bits 7:0) |
|---|---|---|---|---|
| Set | | | | 3A0h |
| Get | BA000h | | | |

| Field Name | Bits | R/W | Default | Reset |
|---|---|---|---|---|
| Rsvd2 | 31:8 | R | 000000h | N/A (Hard-coded) |
| | Reserved. | | | |
| Mute | 7 | RW | 0h | POR - DAFG - ULR |
| | Amp mute: 1 = muted, 0 = not muted. | | | |
| Rsvd1 | 6:0 | R | 00h | N/A (Hard-coded) |
| | Reserved. | | | |

### 7.32.6. SPDIFOut0 (NID = 25h): OutAmpRight

| Reg | Byte 4 (Bits 31:24) | Byte 3 (Bits 23:16) | Byte 2 (Bits 15:8) | Byte 1 (Bits 7:0) |
|---|---|---|---|---|
| Set | | | | 390h |
| Get | B8000h | | | |

| Field Name | Bits | R/W | Default | Reset |
|---|---|---|---|---|
| Rsvd2 | 31:8 | R | 000000h | N/A (Hard-coded) |
| | Reserved. | | | |


©2014 TEMPO SEMICONDCUTOR, INC..

| Field Name | Bits | R/W | Default | Reset |
|---|---|---|---|---|
| Mute | 7 | RW | 0h | POR - DAFG - ULR |
| | Amp mute: 1 = muted, 0 = not muted. | | | |
| Rsvd1 | 6:0 | R | 00h | N/A (Hard-coded) |
| | Reserved. | | | |

### *7.32.7. SPDIFOut0 (NID = 25h): PwrState*

| Reg | Byte 4 (Bits 31:24) | Byte 3 (Bits 23:16) | Byte 2 (Bits 15:8) | Byte 1 (Bits 7:0) |
|---|---|---|---|---|
| Set | | | | 705h |
| Get | F0500h | | | |

| Field Name | Bits | R/W | Default | Reset |
|---|---|---|---|---|
| Rsvd4 | 31:11 | R | 000000h | N/A (Hard-coded) |
| | Reserved. | | | |
| SettingsReset | 10 | R | 1h | POR - DAFG - ULR |
| | Indicates if any persistent settings in this Widget have been reset. Cleared by PwrState 'Get', or a 'Set' to any Verb in this Widget. | | | |
| Rsvd3 | 9 | R | 0h | N/A (Hard-coded) |
| | Reserved. | | | |
| Error | 8 | R | 0h | POR - DAFG - ULR |
| | Error indicator: 1 = cannot enter requested power state, 0 = no problem with requested power state. | | | |
| Rsvd2 | 7:6 | R | 0h | N/A (Hard-coded) |
| | Reserved. | | | |
| Act | 5:4 | R | 3h | POR - DAFG - LR |
| | Actual power state of this widget. | | | |
| Rsvd1 | 3:2 | R | 0h | N/A (Hard-coded) |
| | Reserved. | | | |


©2014 TEMPO SEMICONDCUTOR, INC..

| Field Name | Bits | R/W | Default | Reset |
|---|---|---|---|---|
| Set | 1:0 | RW | 3h | POR - DAFG - LR |
| | Current power state setting for this widget. | | | |

### 7.32.8. SPDIFOut0 (NID = 25h): CnvtrID

| Reg | Byte 4 (Bits 31:24) | Byte 3 (Bits 23:16) | Byte 2 (Bits 15:8) | Byte 1 (Bits 7:0) |
|---|---|---|---|---|
| Set | | | | 706h |
| Get | F0600h | | | |

| Field Name | Bits | R/W | Default | Reset |
|---|---|---|---|---|
| Rsvd | 31:8 | R | 000000h | N/A (Hard-coded) |
| | Reserved. | | | |
| Strm | 7:4 | RW | 0h | POR - S&DAFG - LR - PS |
| | Stream ID: 0h = Converter "off", 1h-Fh = valid ID's. | | | |
| Ch | 3:0 | RW | 0h | POR - S&DAFG - LR - PS |
| | Channel assignment ("Ch" and "Ch+1" assigned as a pair, for a stereo converter). | | | |

### 7.32.9. SPDIFOut0 (NID = 25h): DigCnvtr

| Reg | Byte 4 (Bits 31:24) | Byte 3 (Bits 23:16) | Byte 2 (Bits 15:8) | Byte 1 (Bits 7:0) |
|---|---|---|---|---|
| Set | 73Fh | 73Eh | 70Eh | 70Dh |
| Get | F0E00h / F0D00h | | | |

| Field Name | Bits | R/W | Default | Reset |
|---|---|---|---|---|
| Rsvd2 | 31:24 | R | 00h | N/A (Hard-coded) |
| | Reserved. | | | |


©2014 TEMPO SEMICONDCUTOR, INC..

| Field Name | Bits | R/W | Default | Reset |
|---|---|---|---|---|
| KeepAlive | 23 | RW | 0h | POR - DAFG - ULR |
| | Keep Alive Enable: 1 = clocking information maintained during D3, 0 = clock information not required during D3. | | | |
| Rsvd1 | 22:15 | R | 00h | N/A (Hard-coded) |
| | Reserved. | | | |
| CC | 14:8 | RW | 00h | POR - DAFG - ULR |
| | CC: Category Code. | | | |
| L | 7 | RW | 0h | POR - DAFG - ULR |
| | L: Generation Level. | | | |
| PRO | 6 | RW | 0h | POR - DAFG - ULR |
| | PRO: Professional. | | | |
| AUDIO | 5 | RW | 0h | POR - DAFG - ULR |
| | /AUDIO: Non-Audio. | | | |
| COPY | 4 | RW | 0h | POR - DAFG - ULR |
| | COPY: Copyright. | | | |
| PRE | 3 | RW | 0h | POR - DAFG - ULR |
| | PRE: Preemphasis. | | | |
| VCFG | 2 | RW | 0h | POR - DAFG - ULR |
| | VCFG: Validity Config. | | | |
| V | 1 | RW | 0h | POR - DAFG - ULR |
| | V: Validity. | | | |
| DigEn | 0 | RW | 0h | POR - DAFG - ULR |
| | Digital enable: 1 = converter enabled, 0 = converter disable. | | | |


©2014 TEMPO SEMICONDCUTOR, INC..

## 7.33. SPDIFOut1 (NID = 26h): WCap

| Reg | Byte 4 (Bits 31:24) | Byte 3 (Bits 23:16) | Byte 2 (Bits 15:8) | Byte 1 (Bits 7:0) |
|---|---|---|---|---|
| Set | | | | |
| Get | F0009h | | | |

| Field Name | Bits | R/W | Default | Reset |
|---|---|---|---|---|
| Rsvd2 | 31:24 | R | 00h | N/A (Hard-coded) |
| | Reserved. | | | |
| Type | 23:20 | R | 0h | N/A (Hard-coded) |
| | Widget type:<br>0h = Out Converter<br>1h = In Converter<br>2h = Summing (Mixer)<br>3h = Selector (Mux)<br>4h = Pin Complex<br>5h = Power<br>6h = Volume Knob<br>7h = Beep Generator<br>8h-Eh = Reserved<br>Fh = Vendor Defined | | | |
| Delay | 19:16 | R | 4h | N/A (Hard-coded) |
| | Number of sample delays through widget. | | | |
| Rsvd1 | 15:12 | R | 0h | N/A (Hard-coded) |
| | Reserved. | | | |
| SwapCap | 11 | R | 0h | N/A (Hard-coded) |
| | Left/right swap support: 1 = yes, 0 = no. | | | |
| PwrCntrl | 10 | R | 1h | N/A (Hard-coded) |
| | Power state support: 1 = yes, 0 = no. | | | |
| Dig | 9 | R | 1h | N/A (Hard-coded) |
| | Digital stream support: 1 = yes (digital), 0 = no (analog). | | | |
| ConnList | 8 | R | 0h | N/A (Hard-coded) |
| | Connection list present: 1 = yes, 0 = no. | | | |


©2014 TEMPO SEMICONDCUTOR, INC..

| Field Name | Bits | R/W | Default | Reset |
|---|---|---|---|---|
| UnSolCap | 7 | R | 0h | N/A (Hard-coded) |
| | Unsolicited response support: 1 = yes, 0 = no. | | | |
| ProcWidget | 6 | R | 0h | N/A (Hard-coded) |
| | Processing state support: 1 = yes, 0 = no. | | | |
| Stripe | 5 | R | 0h | N/A (Hard-coded) |
| | Striping support: 1 = yes, 0 = no. | | | |
| FormatOvrd | 4 | R | 1h | N/A (Hard-coded) |
| | Stream format override: 1 = yes, 0 = no. | | | |
| AmpParOvrd | 3 | R | 1h | N/A (Hard-coded) |
| | Amplifier capabilities override: 1 = yes, no. | | | |
| OutAmpPrsnt | 2 | R | 1h | N/A (Hard-coded) |
| | Output amp present: 1 = yes, 0 = no. | | | |
| InAmpPrsnt | 1 | R | 0h | N/A (Hard-coded) |
| | Input amp present: 1 = yes, 0 = no. | | | |
| Stereo | 0 | R | 1h | N/A (Hard-coded) |
| | Stereo stream support: 1 = yes (stereo), 0 = no (mono). | | | |

### *7.33.1. SPDIFOut1 (NID = 26h): PCMCap*

| Reg | Byte 4 (Bits 31:24) | Byte 3 (Bits 23:16) | Byte 2 (Bits 15:8) | Byte 1 (Bits 7:0) |
|---|---|---|---|---|
| Set | | | | |
| Get | F000Ah | | | |

| Field Name | Bits | R/W | Default | Reset |
|---|---|---|---|---|
| Rsvd2 | 31:21 | R | 000h | N/A (Hard-coded) |
| | Reserved. | | | |


©2014 TEMPO SEMICONDCUTOR, INC..

| Field Name | Bits | R/W | Default | Reset |
|---|---|---|---|---|
| B32 | 20 | R | 0h | N/A (Hard-coded) |
| | 32 bit audio format support: 1 = yes, 0 = no. | | | |
| B24 | 19 | R | 1h | N/A (Hard-coded) |
| | 24 bit audio format support: 1 = yes, 0 = no. | | | |
| B20 | 18 | R | 1h | N/A (Hard-coded) |
| | 20 bit audio format support: 1 = yes, 0 = no. | | | |
| B16 | 17 | R | 1h | N/A (Hard-coded) |
| | 16 bit audio format support: 1 = yes, 0 = no. | | | |
| B8 | 16 | R | 0h | N/A (Hard-coded) |
| | 8 bit audio format support: 1 = yes, 0 = no. | | | |
| Rsvd1 | 15:12 | R | 0h | N/A (Hard-coded) |
| | Reserved. | | | |
| R12 | 11 | R | 0h | N/A (Hard-coded) |
| | 384kHz rate support: 1 = yes, 0 = no. | | | |
| R11 | 10 | R | 1h | N/A (Hard-coded) |
| | 192kHz rate support: 1 = yes, 0 = no. | | | |
| R10 | 9 | R | 0h | N/A (Hard-coded) |
| | 176.4kHz rate support: 1 = yes, 0 = no. | | | |
| R9 | 8 | R | 1h | N/A (Hard-coded) |
| | 96kHz rate support: 1 = yes, 0 = no. | | | |
| R8 | 7 | R | 1h | N/A (Hard-coded) |
| | 88.2kHz rate support: 1 = yes, 0 = no. | | | |
| R7 | 6 | R | 1h | N/A (Hard-coded) |
| | 48kHz rate support: 1 = yes, 0 = no. | | | |
| R6 | 5 | R | 1h | N/A (Hard-coded) |
| | 44.1kHz rate support: 1 = yes, 0 = no. | | | |


©2014 TEMPO SEMICONDCUTOR, INC..

| Field Name | Bits | R/W | Default | Reset |
|---|---|---|---|---|
| R5 | 4 | R | 0h | N/A (Hard-coded) |
| | 32kHz rate support: 1 = yes, 0 = no. | | | |
| R4 | 3 | R | 0h | N/A (Hard-coded) |
| | 22.05kHz rate support: 1 = yes, 0 = no. | | | |
| R3 | 2 | R | 0h | N/A (Hard-coded) |
| | 16kHz rate support: 1 = yes, 0 = no. | | | |
| R2 | 1 | R | 0h | N/A (Hard-coded) |
| | 11.025kHz rate support: 1 = yes, 0 = no. | | | |
| R1 | 0 | R | 0h | N/A (Hard-coded) |
| | 8kHz rate support: 1 = yes, 0 = no. | | | |

### *7.33.2. SPDIFOut1 (NID = 26h): StreamCap*

| Reg | Byte 4 (Bits 31:24) | Byte 3 (Bits 23:16) | Byte 2 (Bits 15:8) | Byte 1 (Bits 7:0) |
|---|---|---|---|---|
| Set | | | | |
| Get | F000Bh | | | |

| Field Name | Bits | R/W | Default | Reset |
|---|---|---|---|---|
| Rsvd | 31:3 | R | 00000000h | N/A (Hard-coded) |
| | Reserved. | | | |
| AC3 | 2 | R | 1h | N/A (Hard-coded) |
| | AC-3 formatted data support: 1 = yes, 0 = no. | | | |
| Float32 | 1 | R | 0h | N/A (Hard-coded) |
| | Float32 formatted data support: 1 = yes, 0 = no. | | | |
| PCM | 0 | R | 1h | N/A (Hard-coded) |
| | PCM-formatted data support: 1 = yes, 0 = no. | | | |


©2014 TEMPO SEMICONDCUTOR, INC..

### *7.33.3. SPDIFOut1 (NID = 26h): OutAmpCap*

| Reg | Byte 4 (Bits 31:24) | Byte 3 (Bits 23:16) | Byte 2 (Bits 15:8) | Byte 1 (Bits 7:0) |
|---|---|---|---|---|
| Set | | | | |
| Get | F0012h | | | |

| Field Name | Bits | R/W | Default | Reset |
|---|---|---|---|---|
| Mute | 31 | R | 1h | N/A (Hard-coded) |
| | Mute support: 1 = yes, 0 = no. | | | |
| Rsvd3 | 30:23 | R | 00h | N/A (Hard-coded) |
| | Reserved. | | | |
| StepSize | 22:16 | R | 00h | N/A (Hard-coded) |
| | Size of each step in the gain range: 0 to 127 = .25dB to 32dB, in .25dB steps. | | | |
| Rsvd2 | 15 | R | 0h | N/A (Hard-coded) |
| | Reserved. | | | |
| NumSteps | 14:8 | R | 00h | N/A (Hard-coded) |
| | Number of gains steps (number of possible settings - 1). | | | |
| Rsvd1 | 7 | R | 0h | N/A (Hard-coded) |
| | Reserved. | | | |
| Offset | 6:0 | R | 00h | N/A (Hard-coded) |
| | Indicates which step is 0dB | | | |

### *7.33.4. SPDIFOut1 (NID = 26h): Cnvtr*

| Reg | Byte 4 (Bits 31:24) | Byte 3 (Bits 23:16) | Byte 2 (Bits 15:8) | Byte 1 (Bits 7:0) |
|---|---|---|---|---|
| Set | | | 2h | |
| Get | A0000h | | | |


©2014 TEMPO SEMICONDCUTOR, INC..

| Field Name | Bits | R/W | Default | Reset |
|---|---|---|---|---|
| Rsvd2 | 31:16 | R | 0000h | N/A (Hard-coded) |
| | Reserved. | | | |
| FrmtNonPCM | 15 | RW | 0h | POR - DAFG - ULR |
| | Stream type: 1 = Non-PCM, 0 = PCM. | | | |
| FrmtSmplRate | 14 | RW | 0h | POR - DAFG - ULR |
| | Sample base rate: 1 = 44.1kHz, 0 = 48kHz. | | | |
| SmplRateMultp | 13:11 | RW | 0h | POR - DAFG - ULR |
| | Sample base rate multiple:<br>000b= x1 (48kHz/44.1kHz or less)<br>001b= x2 (96kHz/88.2kHz/32kHz)<br>010b= x3 (144kHz)<br>011b= x4 (192kHz/176.4kHz)<br>100b-111b Reserved | | | |
| SmplRateDiv | 10:8 | RW | 0h | POR - DAFG - ULR |
| | Sample base rate divider:<br>000b= Divide by 1 (48kHz/44.1kHz)<br>001b= Divide by 2 (24kHz/20.05kHz)<br>010b= Divide by 3 (16kHz/32kHz)<br>011b= Divide by 4 (11.025kHz)<br>100b= Divide by 5 (9.6kHz)<br>101b= Divide by 6 (8kHz)<br>110b= Divide by 7<br>111b= Divide by 8 (6kHz) | | | |
| Rsvd1 | 7 | R | 0h | N/A (Hard-coded) |
| | Reserved. | | | |
| BitsPerSmpl | 6:4 | RW | 3h | POR - DAFG - ULR |
| | Bits per sample:<br>000b= 8 bits<br>001b= 16 bits<br>010b= 20 bits<br>011b= 24 bits<br>100b= 32 bits<br>101b-111b= Reserved | | | |


©2014 TEMPO SEMICONDCUTOR, INC..

| Field Name | Bits | R/W | Default | Reset |
|---|---|---|---|---|
| NmbrChan | 3:0 | RW | 1h | POR - DAFG - ULR |
| | Total number of channels in the stream assigned to this converter: 0000b-1111b= 1-16 channels. | | | |

### 7.33.5. SPDIFOut1 (NID = 26h): OutAmpLeft

| Reg | Byte 4 (Bits 31:24) | Byte 3 (Bits 23:16) | Byte 2 (Bits 15:8) | Byte 1 (Bits 7:0) |
|---|---|---|---|---|
| Set | | | | 3A0h |
| Get | BA000h | | | |

| Field Name | Bits | R/W | Default | Reset |
|---|---|---|---|---|
| Rsvd2 | 31:8 | R | 000000h | N/A (Hard-coded) |
| | Reserved. | | | |
| Mute | 7 | RW | 0h | POR - DAFG - ULR |
| | Amp mute: 1 = muted, 0 = not muted. | | | |
| Rsvd1 | 6:0 | R | 00h | N/A (Hard-coded) |
| | Reserved. | | | |

### 7.33.6. SPDIFOut1 (NID = 26h): OutAmpRight

| Reg | Byte 4 (Bits 31:24) | Byte 3 (Bits 23:16) | Byte 2 (Bits 15:8) | Byte 1 (Bits 7:0) |
|---|---|---|---|---|
| Set | | | | 390h |
| Get | B8000h | | | |

| Field Name | Bits | R/W | Default | Reset |
|---|---|---|---|---|
| Rsvd2 | 31:8 | R | 000000h | N/A (Hard-coded) |
| | Reserved. | | | |


©2014 TEMPO SEMICONDCUTOR, INC..

| Field Name | Bits | R/W | Default | Reset |
|---|---|---|---|---|
| Mute | 7 | RW | 0h | POR - DAFG - ULR |
| | Amp mute: 1 = muted, 0 = not muted. | | | |
| Rsvd1 | 6:0 | R | 00h | N/A (Hard-coded) |
| | Reserved. | | | |

### *7.33.7. SPDIFOut1 (NID = 26h): PwrState*

| Reg | Byte 4 (Bits 31:24) | Byte 3 (Bits 23:16) | Byte 2 (Bits 15:8) | Byte 1 (Bits 7:0) |
|---|---|---|---|---|
| Set | | | | 705h |
| Get | F0500h | | | |

| Field Name | Bits | R/W | Default | Reset |
|---|---|---|---|---|
| Rsvd4 | 31:11 | R | 000000h | N/A (Hard-coded) |
| | Reserved. | | | |
| SettingsReset | 10 | R | 1h | POR - DAFG - ULR |
| | Indicates if any persistent settings in this Widget have been reset. Cleared by PwrState 'Get', or a 'Set' to any Verb in this Widget. | | | |
| Rsvd3 | 9 | R | 0h | N/A (Hard-coded) |
| | Reserved. | | | |
| Error | 8 | R | 0h | POR - DAFG - ULR |
| | Error indicator: 1 = cannot enter requested power state, 0 = no problem with requested power state. | | | |
| Rsvd2 | 7:6 | R | 0h | N/A (Hard-coded) |
| | Reserved. | | | |
| Act | 5:4 | R | 3h | POR - DAFG - LR |
| | Actual power state of this widget. | | | |
| Rsvd1 | 3:2 | R | 0h | N/A (Hard-coded) |
| | Reserved. | | | |


©2014 TEMPO SEMICONDCUTOR, INC..

| Field Name | Bits | R/W | Default | Reset |
|---|---|---|---|---|
| Set | 1:0 | RW | 3h | POR - DAFG - LR |
| | Current power state setting for this widget. | | | |

### 7.33.8. SPDIFOut1 (NID = 26h): CnvtrID

| Reg | Byte 4 (Bits 31:24) | Byte 3 (Bits 23:16) | Byte 2 (Bits 15:8) | Byte 1 (Bits 7:0) |
|---|---|---|---|---|
| Set | | | | 706h |
| Get | F0600h | | | |

| Field Name | Bits | R/W | Default | Reset |
|---|---|---|---|---|
| Rsvd | 31:8 | R | 000000h | N/A (Hard-coded) |
| | Reserved. | | | |
| Strm | 7:4 | RW | 0h | POR - S&DAFG - LR - PS |
| | Stream ID: 0h = Converter "off", 1h-Fh = valid ID's. | | | |
| Ch | 3:0 | RW | 0h | POR - S&DAFG - LR - PS |
| | Channel assignment ("Ch" and "Ch+1" assigned as a pair, for a stereo converter). | | | |

### 7.33.9. SPDIFOut1 (NID = 26h): DigCnvtr

| Reg | Byte 4 (Bits 31:24) | Byte 3 (Bits 23:16) | Byte 2 (Bits 15:8) | Byte 1 (Bits 7:0) |
|---|---|---|---|---|
| Set | 73Fh | 73Eh | 70Eh | 70Dh |
| Get | F0E00h / F0D00h | | | |

| Field Name | Bits | R/W | Default | Reset |
|---|---|---|---|---|
| Rsvd2 | 31:24 | R | 00h | N/A (Hard-coded) |
| | Reserved. | | | |


©2014 TEMPO SEMICONDCUTOR, INC..

| Field Name | Bits | R/W | Default | Reset |
|---|---|---|---|---|
| KeepAlive | 23 | RW | 0h | POR - DAFG - ULR |
| | Keep Alive Enable: 1 = clocking information maintained during D3, 0 = clock information not required during D3. | | | |
| Rsvd1 | 22:15 | R | 00h | N/A (Hard-coded) |
| | Reserved. | | | |
| CC | 14:8 | RW | 00h | POR - DAFG - ULR |
| | CC: Category Code. | | | |
| L | 7 | RW | 0h | POR - DAFG - ULR |
| | L: Generation Level. | | | |
| PRO | 6 | RW | 0h | POR - DAFG - ULR |
| | PRO: Professional. | | | |
| AUDIO | 5 | RW | 0h | POR - DAFG - ULR |
| | /AUDIO: Non-Audio. | | | |
| COPY | 4 | RW | 0h | POR - DAFG - ULR |
| | COPY: Copyright. | | | |
| PRE | 3 | RW | 0h | POR - DAFG - ULR |
| | PRE: Preemphasis. | | | |
| VCFG | 2 | RW | 0h | POR - DAFG - ULR |
| | VCFG: Validity Config. | | | |
| V | 1 | RW | 0h | POR - DAFG - ULR |
| | V: Validity. | | | |
| DigEn | 0 | RW | 0h | POR - DAFG - ULR |
| | Digital enable: 1 = converter enabled, 0 = converter disable. | | | |


©2014 TEMPO SEMICONDCUTOR, INC..

## 7.34. SPDIFIn (NID = 27h): WCap

| Reg | Byte 4 (Bits 31:24) | Byte 3 (Bits 23:16) | Byte 2 (Bits 15:8) | Byte 1 (Bits 7:0) |
|---|---|---|---|---|
| Set | | | | |
| Get | F0009h | | | |

| Field Name | Bits | R/W | Default | Reset |
|---|---|---|---|---|
| Rsvd2 | 31:24 | R | 00h | N/A (Hard-coded) |
| | Reserved. | | | |
| Type | 23:20 | R | 1h | N/A (Hard-coded) |
| | Widget type:<br>0h = Out Converter<br>1h = In Converter<br>2h = Summing (Mixer)<br>3h = Selector (Mux)<br>4h = Pin Complex<br>5h = Power<br>6h = Volume Knob<br>7h = Beep Generator<br>8h-Eh = Reserved<br>Fh = Vendor Defined | | | |
| Delay | 19:16 | R | 4h | N/A (Hard-coded) |
| | Number of sample delays through widget. | | | |
| Rsvd1 | 15:12 | R | 0h | N/A (Hard-coded) |
| | Reserved. | | | |
| SwapCap | 11 | R | 0h | N/A (Hard-coded) |
| | Left/right swap support: 1 = yes, 0 = no. | | | |
| PwrCntrl | 10 | R | 1h | N/A (Hard-coded) |
| | Power state support: 1 = yes, 0 = no. | | | |
| Dig | 9 | R | 1h | N/A (Hard-coded) |
| | Digital stream support: 1 = yes (digital), 0 = no (analog). | | | |
| ConnList | 8 | R | 1h | N/A (Hard-coded) |
| | Connection list present: 1 = yes, 0 = no. | | | |


©2014 TEMPO SEMICONDCUTOR, INC..

| Field Name | Bits | R/W | Default | Reset |
|---|---|---|---|---|
| UnSolCap | 7 | R | 0h | N/A (Hard-coded) |
| | Unsolicited response support: 1 = yes, 0 = no. | | | |
| ProcWidget | 6 | R | 0h | N/A (Hard-coded) |
| | Processing state support: 1 = yes, 0 = no. | | | |
| Stripe | 5 | R | 0h | N/A (Hard-coded) |
| | Striping support: 1 = yes, 0 = no. | | | |
| FormatOvrd | 4 | R | 1h | N/A (Hard-coded) |
| | Stream format override: 1 = yes, 0 = no. | | | |
| AmpParOvrd | 3 | R | 1h | N/A (Hard-coded) |
| | Amplifier capabilities override: 1 = yes, no. | | | |
| OutAmpPrsnt | 2 | R | 0h | N/A (Hard-coded) |
| | Output amp present: 1 = yes, 0 = no. | | | |
| InAmpPrsnt | 1 | R | 1h | N/A (Hard-coded) |
| | Input amp present: 1 = yes, 0 = no. | | | |
| Stereo | 0 | R | 1h | N/A (Hard-coded) |
| | Stereo stream support: 1 = yes (stereo), 0 = no (mono). | | | |

### *7.34.1. SPDIFIn (NID = 27h): PCMCap*

| Reg | Byte 4 (Bits 31:24) | Byte 3 (Bits 23:16) | Byte 2 (Bits 15:8) | Byte 1 (Bits 7:0) |
|---|---|---|---|---|
| Set | | | | |
| Get | F000Ah | | | |

| Field Name | Bits | R/W | Default | Reset |
|---|---|---|---|---|
| Rsvd2 | 31:21 | R | 000h | N/A (Hard-coded) |
| | Reserved. | | | |


©2014 TEMPO SEMICONDCUTOR, INC..

| Field Name | Bits | R/W | Default | Reset |
|---|---|---|---|---|
| B32 | 20 | R | 0h | N/A (Hard-coded) |
| | 32 bit audio format support: 1 = yes, 0 = no. | | | |
| B24 | 19 | R | 1h | N/A (Hard-coded) |
| | 24 bit audio format support: 1 = yes, 0 = no. | | | |
| B20 | 18 | R | 1h | N/A (Hard-coded) |
| | 20 bit audio format support: 1 = yes, 0 = no. | | | |
| B16 | 17 | R | 1h | N/A (Hard-coded) |
| | 16 bit audio format support: 1 = yes, 0 = no. | | | |
| B8 | 16 | R | 0h | N/A (Hard-coded) |
| | 8 bit audio format support: 1 = yes, 0 = no. | | | |
| Rsvd1 | 15:12 | R | 0h | N/A (Hard-coded) |
| | Reserved. | | | |
| R12 | 11 | R | 0h | N/A (Hard-coded) |
| | 384kHz rate support: 1 = yes, 0 = no. | | | |
| R11 | 10 | R | 0h | N/A (Hard-coded) |
| | 192kHz rate support: 1 = yes, 0 = no. | | | |
| R10 | 9 | R | 0h | N/A (Hard-coded) |
| | 176.4kHz rate support: 1 = yes, 0 = no. | | | |
| R9 | 8 | R | 1h | N/A (Hard-coded) |
| | 96kHz rate support: 1 = yes, 0 = no. | | | |
| R8 | 7 | R | 0h | N/A (Hard-coded) |
| | 88.2kHz rate support: 1 = yes, 0 = no. | | | |
| R7 | 6 | R | 1h | N/A (Hard-coded) |
| | 48kHz rate support: 1 = yes, 0 = no. | | | |
| R6 | 5 | R | 1h | N/A (Hard-coded) |
| | 44.1kHz rate support: 1 = yes, 0 = no. | | | |


©2014 TEMPO SEMICONDCUTOR, INC..

| Field Name | Bits | R/W | Default | Reset |
|---|---|---|---|---|
| R5 | 4 | R | 0h | N/A (Hard-coded) |
| | 32kHz rate support: 1 = yes, 0 = no. | | | |
| R4 | 3 | R | 0h | N/A (Hard-coded) |
| | 22.05kHz rate support: 1 = yes, 0 = no. | | | |
| R3 | 2 | R | 0h | N/A (Hard-coded) |
| | 16kHz rate support: 1 = yes, 0 = no. | | | |
| R2 | 1 | R | 0h | N/A (Hard-coded) |
| | 11.025kHz rate support: 1 = yes, 0 = no. | | | |
| R1 | 0 | R | 0h | N/A (Hard-coded) |
| | 8kHz rate support: 1 = yes, 0 = no. | | | |

### *7.34.2. SPDIFIn (NID = 27h): StreamCap*

| Reg | Byte 4 (Bits 31:24) | Byte 3 (Bits 23:16) | Byte 2 (Bits 15:8) | Byte 1 (Bits 7:0) |
|---|---|---|---|---|
| Set | | | | |
| Get | F000Bh | | | |

| Field Name | Bits | R/W | Default | Reset |
|---|---|---|---|---|
| Rsvd | 31:3 | R | 00000000h | N/A (Hard-coded) |
| | Reserved. | | | |
| AC3 | 2 | R | 1h | N/A (Hard-coded) |
| | AC-3 formatted data support: 1 = yes, 0 = no. | | | |
| Float32 | 1 | R | 0h | N/A (Hard-coded) |
| | Float32 formatted data support: 1 = yes, 0 = no. | | | |
| PCM | 0 | R | 1h | N/A (Hard-coded) |
| | PCM-formatted data support: 1 = yes, 0 = no. | | | |


©2014 TEMPO SEMICONDCUTOR, INC..

### *7.34.3. SPDIFIn (NID = 27h): Cnvtr*

| Reg | Byte 4 (Bits 31:24) | Byte 3 (Bits 23:16) | Byte 2 (Bits 15:8) | Byte 1 (Bits 7:0) |
|---|---|---|---|---|
| Set | | | 2h | |
| Get | A0000h | | | |

| Field Name | Bits | R/W | Default | Reset |
|---|---|---|---|---|
| Rsvd2 | 31:16 | R | 0000h | N/A (Hard-coded) |
| | Reserved. | | | |
| FrmtNonPCM | 15 | RW | 0h | POR - DAFG - ULR |
| | Stream type: 1 = Non-PCM, 0 = PCM. | | | |
| FrmtSmplRate | 14 | RW | 0h | POR - DAFG - ULR |
| | Sample base rate: 1 = 44.1kHz, 0 = 48kHz. | | | |
| SmplRateMultp | 13:11 | RW | 0h | POR - DAFG - ULR |
| | Sample base rate multiple:<br>000b= x1 (48kHz/44.1kHz or less)<br>001b= x2 (96kHz/88.2kHz/32kHz)<br>010b= x3 (144kHz)<br>011b= x4 (192kHz/176.4kHz)<br>100b-111b Reserved | | | |
| SmplRateDiv | 10:8 | RW | 0h | POR - DAFG - ULR |
| | Sample base rate divider:<br>000b= Divide by 1 (48kHz/44.1kHz)<br>001b= Divide by 2 (24kHz/20.05kHz)<br>010b= Divide by 3 (16kHz/32kHz)<br>011b= Divide by 4 (11.025kHz)<br>100b= Divide by 5 (9.6kHz)<br>101b= Divide by 6 (8kHz)<br>110b= Divide by 7<br>111b= Divide by 8 (6kHz) | | | |
| Rsvd1 | 7 | R | 0h | N/A (Hard-coded) |
| | Reserved. | | | |


©2014 TEMPO SEMICONDCUTOR, INC..

| Field Name | Bits | R/W | Default | Reset |
|---|---|---|---|---|
| BitsPerSmpl | 6:4 | RW | 3h | POR - DAFG - ULR |
| | Bits per sample:<br>000b= 8 bits<br>001b= 16 bits<br>010b= 20 bits<br>011b= 24 bits<br>100b= 32 bits<br>101b-111b= Reserved | | | |
| NmbrChan | 3:0 | RW | 1h | POR - DAFG - ULR |
| | Total number of channels in the stream assigned to this converter:<br>0000b-1111b= 1-16 channels. | | | |

### *7.34.4. SPDIFIn (NID = 27h): ConLst*

| Reg | Byte 4 (Bits 31:24) | Byte 3 (Bits 23:16) | Byte 2 (Bits 15:8) | Byte 1 (Bits 7:0) |
|---|---|---|---|---|
| Set | | | | |
| Get | F000Eh | | | |

| Field Name | Bits | R/W | Default | Reset |
|---|---|---|---|---|
| Rsvd | 31:8 | R | 000000h | N/A (Hard-coded) |
| | Reserved. | | | |
| LForm | 7 | R | 0h | N/A (Hard-coded) |
| | Connection list format: 1 = long-form (15-bit) NID entries, 0 = short-form (7-bit) NID entries. | | | |
| ConL | 6:0 | R | 01h | N/A (Hard-coded) |
| | Number of NID entries in connection list. | | | |

### *7.34.5. SPDIFIn (NID = 27h): ConLstEntry0*

| Reg | Byte 4 (Bits 31:24) | Byte 3 (Bits 23:16) | Byte 2 (Bits 15:8) | Byte 1 (Bits 7:0) |
|---|---|---|---|---|
| Set | | | | |
| Get | F0200h | | | |


©2014 TEMPO SEMICONDCUTOR, INC..

| Field Name | Bits | R/W | Default | Reset |
|---|---|---|---|---|
| ConL3 | 31:24 | R | 00h | N/A (Hard-coded) |
| | Unused | | | |
| ConL2 | 23:16 | R | 00h | N/A (Hard-coded) |
| | Unused | | | |
| ConL1 | 15:8 | R | 00h | N/A (Hard-coded) |
| | Unused | | | |
| ConL0 | 7:0 | R | 24h | N/A (Hard-coded) |
| | Dig2Pin pin widget (0x24 | | | |

### *7.34.6. SPDIFIn (NID = 27h): PwrState*

| Reg | Byte 4 (Bits 31:24) | Byte 3 (Bits 23:16) | Byte 2 (Bits 15:8) | Byte 1 (Bits 7:0) |
|---|---|---|---|---|
| Set | | | | 705h |
| Get | F0500h | | | |

| Field Name | Bits | R/W | Default | Reset |
|---|---|---|---|---|
| Rsvd4 | 31:11 | R | 000000h | N/A (Hard-coded) |
| | Reserved. | | | |
| SettingsReset | 10 | R | 1h | POR - DAFG - ULR |
| | Indicates if any persistent settings in this Widget have been reset. Cleared by PwrState 'Get', or a 'Set' to any Verb in this Widget. | | | |
| Rsvd3 | 9 | R | 0h | N/A (Hard-coded) |
| | Reserved. | | | |
| Error | 8 | R | 0h | POR - DAFG - ULR |
| | Error indicator: 1 = cannot enter requested power state, 0 = no problem with requested power state. | | | |


©2014 TEMPO SEMICONDCUTOR, INC..

| Field Name | Bits | R/W | Default | Reset |
|---|---|---|---|---|
| Rsvd2 | 7:6 | R | 0h | N/A (Hard-coded) |
| | Reserved. | | | |
| Act | 5:4 | R | 3h | POR - DAFG - LR |
| | Actual power state of this widget. | | | |
| Rsvd1 | 3:2 | R | 0h | N/A (Hard-coded) |
| | Reserved. | | | |
| Set | 1:0 | RW | 3h | POR - DAFG - LR |
| | Current power state setting for this widget. | | | |

### *7.34.7. SPDIFIn (NID = 27h): CnvtrID*

| Reg | Byte 4 (Bits 31:24) | Byte 3 (Bits 23:16) | Byte 2 (Bits 15:8) | Byte 1 (Bits 7:0) |
|---|---|---|---|---|
| Set | | | | 706h |
| Get | F0600h | | | |

| Field Name | Bits | R/W | Default | Reset |
|---|---|---|---|---|
| Rsvd | 31:8 | R | 000000h | N/A (Hard-coded) |
| | Reserved. | | | |
| Strm | 7:4 | RW | 0h | POR - S&DAFG - LR - PS |
| | Stream ID: 0h = Converter "off", 1h-Fh = valid ID's. | | | |
| Ch | 3:0 | RW | 0h | POR - S&DAFG - LR - PS |
| | Channel assignment ("Ch" and "Ch+1" assigned as a pair, for a stereo converter). | | | |

### *7.34.8. SPDIFIn (NID = 27h): DigCnvtr*

| Reg | Byte 4 (Bits 31:24) | Byte 3 (Bits 23:16) | Byte 2 (Bits 15:8) | Byte 1 (Bits 7:0) |
|---|---|---|---|---|
| Set | 73Fh | 73Eh | 70Eh | 70Dh |


©2014 TEMPO SEMICONDCUTOR, INC..

### *7.34.8. SPDIFIn (NID = 27h): DigCnvtr*

| Reg | Byte 4 (Bits 31:24) | Byte 3 (Bits 23:16) | Byte 2 (Bits 15:8) | Byte 1 (Bits 7:0) |
|---|---|---|---|---|
| Get | F0E00h / F0D00h | | | |

| Field Name | Bits | R/W | Default | Reset |
|---|---|---|---|---|
| Rsvd2 | 31:24 | R | 00h | N/A (Hard-coded) |
| | Reserved. | | | |
| KeepAlive | 23 | RW | 0h | POR - DAFG - ULR |
| | Keep Alive Enable: 1 = clocking information maintained during D3, 0 = clock information not required during D3. | | | |
| Rsvd1 | 22:15 | R | 00h | N/A (Hard-coded) |
| | Reserved. | | | |
| CC | 14:8 | RW | 00h | POR - DAFG - ULR |
| | CC: Category Code. | | | |
| L | 7 | RW | 0h | POR - DAFG - ULR |
| | L: Generation Level. | | | |
| PRO | 6 | RW | 0h | POR - DAFG - ULR |
| | PRO: Professional. | | | |
| AUDIO | 5 | RW | 0h | POR - DAFG - ULR |
| | /AUDIO: Non-Audio. | | | |
| COPY | 4 | RW | 0h | POR - DAFG - ULR |
| | COPY: Copyright. | | | |
| PRE | 3 | RW | 0h | POR - DAFG - ULR |
| | PRE: Preemphasis. | | | |
| VCFG | 2 | RW | 0h | POR - DAFG - ULR |
| | VCFG: Validity Config. | | | |
| V | 1 | RW | 0h | POR - DAFG - ULR |
| | V: Validity. | | | |


©2014 TEMPO SEMICONDCUTOR, INC..

| Field Name | Bits | R/W | Default | Reset |
|---|---|---|---|---|
| DigEn | 0 | RW | 0h | POR - DAFG - ULR |
| | Digital enable: 1 = converter enabled, 0 = converter disable. | | | |

### *7.34.9. SPDIFIn (NID = 27h): InAmpCap*

| Reg | Byte 4 (Bits 31:24) | Byte 3 (Bits 23:16) | Byte 2 (Bits 15:8) | Byte 1 (Bits 7:0) |
|---|---|---|---|---|
| Set | | | | |
| Get | F000Dh | | | |

| Field Name | Bits | R/W | Default | Reset |
|---|---|---|---|---|
| Mute | 31 | R | 1h | N/A (Hard-coded) |
| | Mute support: 1 = yes, 0 = no. | | | |
| Rsvd3 | 30:23 | R | 00h | N/A (Hard-coded) |
| | Reserved. | | | |
| StepSize | 22:16 | R | 05h | N/A (Hard-coded) |
| | Size of each step in the gain range: 0 to 127 = .25dB to 32dB, in .25dB steps. | | | |
| Rsvd2 | 15 | R | 0h | N/A (Hard-coded) |
| | Reserved. | | | |
| NumSteps | 14:8 | R | 00h | N/A (Hard-coded) |
| | Number of gains steps (number of possible settings - 1). | | | |
| Rsvd1 | 7 | R | 0h | N/A (Hard-coded) |
| | Reserved. | | | |
| Offset | 6:0 | R | 00h | N/A (Hard-coded) |
| | Indicates which step is 0dB | | | |


©2014 TEMPO SEMICONDCUTOR, INC..

### 7.34.10. SPDIFIn (NID = 27h): InAmpLeft

| Reg | Byte 4 (Bits 31:24) | Byte 3 (Bits 23:16) | Byte 2 (Bits 15:8) | Byte 1 (Bits 7:0) |
|---|---|---|---|---|
| Set | | | | 360h |
| Get | B2000h | | | |

| Field Name | Bits | R/W | Default | Reset |
|---|---|---|---|---|
| Rsvd2 | 31:8 | R | 000000h | N/A (Hard-coded) |
| | Reserved. | | | |
| Mute | 7 | RW | 0h | POR - DAFG - ULR |
| | Amp mute: 1 = muted, 0 = not muted | | | |
| Rsvd1 | 6:0 | R | 0h | N/A (Hard-coded) |
| | Reserved. | | | |

### 7.34.11. SPDIFIn (NID = 27h): InAmpRight

| Reg | Byte 4 (Bits 31:24) | Byte 3 (Bits 23:16) | Byte 2 (Bits 15:8) | Byte 1 (Bits 7:0) |
|---|---|---|---|---|
| Set | | | | 350h |
| Get | B0000h | | | |

| Field Name | Bits | R/W | Default | Reset |
|---|---|---|---|---|
| Rsvd2 | 31:8 | R | 000000h | N/A (Hard-coded) |
| | Reserved. | | | |
| Mute | 7 | RW | 0h | POR - DAFG - ULR |
| | Amp mute: 1 = muted, 0 = not muted | | | |
| Rsvd1 | 6:0 | R | 0h | N/A (Hard-coded) |
| | Reserved. | | | |

### 7.34.12. SPDIFIn (NID = 27h): VS

| Reg | Byte 4 (Bits 31:24) | Byte 3 (Bits 23:16) | Byte 2 (Bits 15:8) | Byte 1 (Bits 7:0) |
|---|---|---|---|---|
| Set | | | | 7E8h |
| Get | FE800h | | | |


©2014 TEMPO SEMICONDCUTOR, INC..

| Field Name | Bits | R/W | Default | Reset |
|---|---|---|---|---|
| RcvSmplRate | 31:29 | R | 7h | POR - DAFG - ULR |
| | Received Sample Rate:<br>000b = 44.1kHz<br>001b = 48kHz<br>010b = 88.2kHz<br>011b = 96kHz<br>100b = 176.4kHz<br>101b = 192kHz<br>11Xb = Invalid Rate | | | |
| Rsvd2 | 28:26 | R | 0h | POR - DAFG - ULR |
| | Reserved. | | | |
| OrigFS | 25:22 | R | 0h | POR - DAFG - ULR |
| | Original Sample Rate (per IEC60958-3 spec):<br>0000b = Original sampling frequency not indicated<br>0001b = 192kHz<br>0010b = 12kHz<br>0011b = 176.4kHz<br>0100b = Reserved<br>0101b = 96kHz<br>0110b = 8kHz<br>0111b = 88.2kHz<br>1000b = 16kHz<br>1001b = 24kHz<br>1010b = 11.025kHz<br>1011b = 22.05kHz<br>1100b = 32kHz<br>1101b = 48khz<br>1110b = Reserved<br>1111b = 44.1kHz | | | |
| CA | 21:20 | R | 0h | POR - DAFG - ULR |
| | Clock Accuracy (per IEC60958-3 spec):<br>00b = Level II<br>01b = Level I<br>10b = Level III<br>11b = Reserved | | | |


©2014 TEMPO SEMICONDCUTOR, INC..

| Field Name | Bits | R/W | Default | Reset |
|---|---|---|---|---|
| FS | 19:16 | R | 0h | POR - DAFG - ULR |
| | Sample Rate (per IEC60958-3 spec):<br>0000b = 44.1kHz<br>0001b = Original sampling frequency not indicated<br>0010b = 48kHz<br>0011b = 32kHz<br>0100b = 22.05kHz<br>0101b = Reserved<br>0110b = 24kHz<br>0111b = Reserved<br>1000b = 88.2kHz<br>1001b = Reserved<br>1010b = 96kHz<br>1011b = Reserved<br>1100b = 176.4kHz<br>1101b = Reserved<br>1110b = 192kHz<br>1111b = Reserved | | | |
| CN | 15:12 | R | 0h | POR - DAFG - ULR |
| | Channel Number (per IEC60958-3 spec):<br>0000b = Do not take into account<br>0001b = Channel 1 (Left channel for stereo channel format)<br>0010b = Channel 2 (Right channel for stereo channel format)<br>0011b-1111b = Channel 3-15 | | | |
| SamplWrdL | 11:9 | R | 0h | POR - DAFG - ULR |
| | Sample Word Length (per IEC60958-3 spec):<br>000b = Word length not indicated<br>001b = Max length - 4<br>010b = Max length - 2<br>011b = Reserved<br>100b = Max length - 1<br>101b = Max length - 0<br>110b = Max length - 3<br>111b = Reserved | | | |
| MaxWrdL | 8 | R | 0h | POR - DAFG - ULR |
| | Max Word Length (per IEC60958-3 spec): 0 = 20 bits, 1 = 24 bits. | | | |
| NoBlkChk | 7 | RW | 0h | POR - DAFG - ULR |
| | Disable Sample Block Checking. | | | |
| Rsvd | 6:5 | R | 0h | N/A (Hard-coded) |
| | Reserved. | | | |


©2014 TEMPO SEMICONDCUTOR, INC..

| Field Name | Bits | R/W | Default | Reset |
|---|---|---|---|---|
| ParityLimit | 4:3 | RW | 0h | POR - DAFG - ULR |
| | SPDIFIn Parity Limit (DPLL loses lock when the set number of parity errors per block is detected):<br>00b = 4 Parity errors<br>01b = 3 Parity errors<br>10b = 2 Parity errors<br>11b = 1 Parity errors | | | |
| SPRun | 2 | R | 0h | POR - DAFG - ULR |
| | SPDIFIn Running 0 = no signal on SPDIFIn Pin, 1 = Signal on SPDIFIn pin. | | | |
| SiPerr | 1 | RW | 0h | POR - DAFG - ULR |
| | SPDIFIn Parity Error: 0 = No error detected, 1 = Error detected (write 0 to clear). Not affected by ParityLimit. | | | |
| CopyInv | 0 | RW | 0h | POR - DAFG - ULR |
| | Copyright Invert: 0 = Do not invert COPY bit, 1 = Invert COPY bit.. | | | |


©2014 TEMPO SEMICONDCUTOR, INC..

## 7.35. InPort0Mux (NID = 28h): WCap

| Reg | Byte 4 (Bits 31:24) | Byte 3 (Bits 23:16) | Byte 2 (Bits 15:8) | Byte 1 (Bits 7:0) |
|---|---|---|---|---|
| Set | | | | |
| Get | F0009h | | | |

| Field Name | Bits | R/W | Default | Reset |
|---|---|---|---|---|
| Rsvd2 | 31:24 | R | 00h | N/A (Hard-coded) |
| | Reserved. | | | |
| Type | 23:20 | R | 3h | N/A (Hard-coded) |
| | Widget type:<br>0h = Out Converter<br>1h = In Converter<br>2h = Summing (Mixer)<br>3h = Selector (Mux)<br>4h = Pin Complex<br>5h = Power<br>6h = Volume Knob<br>7h = Beep Generator<br>8h-Eh = Reserved<br>Fh = Vendor Defined | | | |
| Delay | 19:16 | R | 0h | N/A (Hard-coded) |
| | Number of sample delays through widget. | | | |
| Rsvd1 | 15:12 | R | 0h | N/A (Hard-coded) |
| | Reserved. | | | |
| SwapCap | 11 | R | 0h | N/A (Hard-coded) |
| | Left/right swap support: 1 = yes, 0 = no. | | | |
| PwrCntrl | 10 | R | 1h | N/A (Hard-coded) |
| | Power state support: 1 = yes, 0 = no. | | | |
| DigitalStrm | 9 | R | 0h | N/A (Hard-coded) |
| | Digital stream support: 1 = yes (digital), 0 = no (analog). | | | |
| ConnList | 8 | R | 1h | N/A (Hard-coded) |
| | Connection list present: 1 = yes, 0 = no. | | | |


©2014 TEMPO SEMICONDCUTOR, INC..

| Field Name | Bits | R/W | Default | Reset |
|---|---|---|---|---|
| UnsolCap | 7 | R | 0h | N/A (Hard-coded) |
| | Unsolicited response support: 1 = yes, 0 = no. | | | |
| ProcWidget | 6 | R | 0h | N/A (Hard-coded) |
| | Processing state support: 1 = yes, 0 = no. | | | |
| Stripe | 5 | R | 0h | N/A (Hard-coded) |
| | Striping support: 1 = yes, 0 = no. | | | |
| FormatOvrd | 4 | R | 0h | N/A (Hard-coded) |
| | Stream format override: 1 = yes, 0 = no. | | | |
| AmpParamOvrd | 3 | R | 0h | N/A (Hard-coded) |
| | Amplifier capabilities override: 1 = yes, no. | | | |
| OutAmpPrsnt | 2 | R | 0h | N/A (Hard-coded) |
| | Output amp present: 1 = yes, 0 = no. | | | |
| InAmpPrsnt | 1 | R | 0h | N/A (Hard-coded) |
| | Input amp present: 1 = yes, 0 = no. | | | |
| Stereo | 0 | R | 1h | N/A (Hard-coded) |
| | Stereo stream support: 1 = yes (stereo), 0 = no (mono). | | | |

### *7.35.1. InPort0Mux (NID = 28h): ConLst*

| Reg | Byte 4 (Bits 31:24) | Byte 3 (Bits 23:16) | Byte 2 (Bits 15:8) | Byte 1 (Bits 7:0) |
|---|---|---|---|---|
| Set | | | | |
| Get | F000Eh | | | |

| Field Name | Bits | R/W | Default | Reset |
|---|---|---|---|---|
| Rsvd | 31:8 | R | 000000h | N/A (Hard-coded) |
| | Reserved. | | | |


©2014 TEMPO SEMICONDCUTOR, INC..

| Field Name | Bits | R/W | Default | Reset |
|---|---|---|---|---|
| LForm | 7 | R | 0h | N/A (Hard-coded) |
| | Connection list format: 1 = long-form (15-bit) NID entries, 0 = short-form (7-bit) NID entries. | | | |
| ConL | 6:0 | R | 04h | N/A (Hard-coded) |
| | Number of NID entries in connection list. | | | |

### *7.35.2. InPort0Mux (NID = 28h): ConLstEntry0*

| Reg | Byte 4 (Bits 31:24) | Byte 3 (Bits 23:16) | Byte 2 (Bits 15:8) | Byte 1 (Bits 7:0) |
|---|---|---|---|---|
| Set | | | | |
| Get | F0200h | | | |

| Field Name | Bits | R/W | Default | Reset |
|---|---|---|---|---|
| ConL3 | 31:24 | R | 0Fh | N/A (Hard-coded) |
| | Port Fwidget (0x0F) | | | |
| ConL2 | 23:16 | R | 0Dh | N/A (Hard-coded) |
| | Port D Pin widget (0x0D) | | | |
| ConL1 | 15:8 | R | 0Bh | N/A (Hard-coded) |
| | Port B Pin widget (0x0B) | | | |
| ConL0 | 7:0 | R | 0Ah | N/A (Hard-coded) |
| | Port A Pin widget (0x0A) | | | |

### *7.35.3. InPort0Mux (NID = 28h): ConSelectCtrl*

| Reg | Byte 4 (Bits 31:24) | Byte 3 (Bits 23:16) | Byte 2 (Bits 15:8) | Byte 1 (Bits 7:0) |
|---|---|---|---|---|
| Set | | | | 701h |
| Get | F0100h | | | |


©2014 TEMPO SEMICONDCUTOR, INC..

| Field Name | Bits | R/W | Default | Reset |
|---|---|---|---|---|
| Rsvd | 31:3 | R | 00000000h | N/A (Hard-coded) |
| | Reserved. | | | |
| Index | 2:0 | RW | 0h | POR - DAFG - ULR |
| | Connection select control index. | | | |

### *7.35.4. InPort0Mux (NID = 28h): PwrState*

| Reg | Byte 4 (Bits 31:24) | Byte 3 (Bits 23:16) | Byte 2 (Bits 15:8) | Byte 1 (Bits 7:0) |
|---|---|---|---|---|
| Set | | | | 705h |
| Get | F0500h | | | |

| Field Name | Bits | R/W | Default | Reset |
|---|---|---|---|---|
| Rsvd4 | 31:11 | R | 000000h | N/A (Hard-coded) |
| | Reserved. | | | |
| SettingsReset | 10 | R | 1h | POR - DAFG - ULR |
| | Indicates if any persistent settings in this Widget have been reset. Cleared by PwrState 'Get', or a 'Set' to any Verb in this Widget. | | | |
| Rsvd3 | 9 | R | 0h | N/A (Hard-coded) |
| | Reserved. | | | |
| Error | 8 | R | 0h | POR - DAFG - ULR |
| | Error indicator: 1 = cannot enter requested power state, 0 = no problem with requested power state. | | | |
| Rsvd2 | 7:6 | R | 0h | N/A (Hard-coded) |
| | Reserved. | | | |
| Act | 5:4 | R | 3h | POR - DAFG - LR |
| | Actual power state of this widget. | | | |


©2014 TEMPO SEMICONDCUTOR, INC..

| Field Name | Bits | R/W | Default | Reset |
|---|---|---|---|---|
| Rsvd1 | 3:2 | R | 0h | N/A (Hard-coded) |
| | Reserved. | | | |
| Set | 1:0 | RW | 0h | POR - DAFG - LR |
| | Current power state setting for this widget. | | | |


©2014 TEMPO SEMICONDCUTOR, INC..

## 7.36. InPort1Mux (NID = 29h): WCap

| Reg | Byte 4 (Bits 31:24) | Byte 3 (Bits 23:16) | Byte 2 (Bits 15:8) | Byte 1 (Bits 7:0) |
|---|---|---|---|---|
| Set | | | | |
| Get | F0009h | | | |

| Field Name | Bits | R/W | Default | Reset |
|---|---|---|---|---|
| Rsvd2 | 31:24 | R | 00h | N/A (Hard-coded) |
| | Reserved. | | | |
| Type | 23:20 | R | 3h | N/A (Hard-coded) |
| | Widget type:<br>0h = Out Converter<br>1h = In Converter<br>2h = Summing (Mixer)<br>3h = Selector (Mux)<br>4h = Pin Complex<br>5h = Power<br>6h = Volume Knob<br>7h = Beep Generator<br>8h-Eh = Reserved<br>Fh = Vendor Defined | | | |
| Delay | 19:16 | R | 0h | N/A (Hard-coded) |
| | Number of sample delays through widget. | | | |
| Rsvd1 | 15:12 | R | 0h | N/A (Hard-coded) |
| | Reserved. | | | |
| SwapCap | 11 | R | 0h | N/A (Hard-coded) |
| | Left/right swap support: 1 = yes, 0 = no. | | | |
| PwrCntrl | 10 | R | 1h | N/A (Hard-coded) |
| | Power state support: 1 = yes, 0 = no. | | | |
| DigitalStrm | 9 | R | 0h | N/A (Hard-coded) |
| | Digital stream support: 1 = yes (digital), 0 = no (analog). | | | |
| ConnList | 8 | R | 1h | N/A (Hard-coded) |
| | Connection list present: 1 = yes, 0 = no. | | | |


©2014 TEMPO SEMICONDCUTOR, INC..

| Field Name | Bits | R/W | Default | Reset |
|---|---|---|---|---|
| UnsolCap | 7 | R | 0h | N/A (Hard-coded) |
| | Unsolicited response support: 1 = yes, 0 = no. | | | |
| ProcWidget | 6 | R | 0h | N/A (Hard-coded) |
| | Processing state support: 1 = yes, 0 = no. | | | |
| Stripe | 5 | R | 0h | N/A (Hard-coded) |
| | Striping support: 1 = yes, 0 = no. | | | |
| FormatOvrd | 4 | R | 0h | N/A (Hard-coded) |
| | Stream format override: 1 = yes, 0 = no. | | | |
| AmpParamOvrd | 3 | R | 0h | N/A (Hard-coded) |
| | Amplifier capabilities override: 1 = yes, no. | | | |
| OutAmpPrsnt | 2 | R | 0h | N/A (Hard-coded) |
| | Output amp present: 1 = yes, 0 = no. | | | |
| InAmpPrsnt | 1 | R | 0h | N/A (Hard-coded) |
| | Input amp present: 1 = yes, 0 = no. | | | |
| Stereo | 0 | R | 1h | N/A (Hard-coded) |
| | Stereo stream support: 1 = yes (stereo), 0 = no (mono). | | | |

### *7.36.1. InPort1Mux (NID = 29h): ConLst*

| Reg | Byte 4 (Bits 31:24) | Byte 3 (Bits 23:16) | Byte 2 (Bits 15:8) | Byte 1 (Bits 7:0) |
|---|---|---|---|---|
| Set | | | | |
| Get | F000Eh | | | |

| Field Name | Bits | R/W | Default | Reset |
|---|---|---|---|---|
| Rsvd | 31:8 | R | 000000h | N/A (Hard-coded) |
| | Reserved. | | | |


©2014 TEMPO SEMICONDCUTOR, INC..

| Field Name | Bits | R/W | Default | Reset |
|---|---|---|---|---|
| LForm | 7 | R | 0h | N/A (Hard-coded) |
| | Connection list format: 1 = long-form (15-bit) NID entries, 0 = short-form (7-bit) NID entries. | | | |
| ConL | 6:0 | R | 04h | N/A (Hard-coded) |
| | Number of NID entries in connection list. | | | |

### *7.36.2. InPort1Mux (NID = 29h): ConLstEntry0*

| Reg | Byte 4 (Bits 31:24) | Byte 3 (Bits 23:16) | Byte 2 (Bits 15:8) | Byte 1 (Bits 7:0) |
|---|---|---|---|---|
| Set | | | | |
| Get | F0200h | | | |

| Field Name | Bits | R/W | Default | Reset |
|---|---|---|---|---|
| ConL3 | 31:24 | R | 11h | N/A (Hard-coded) |
| | Port H Pin widget (0x11) | | | |
| ConL2 | 23:16 | R | 10h | N/A (Hard-coded) |
| | Port G Pin widget (0x10) | | | |
| ConL1 | 15:8 | R | 0Eh | N/A (Hard-coded) |
| | Port E Pin widget (0x0E) | | | |
| ConL0 | 7:0 | R | 0Ah | N/A (Hard-coded) |
| | Port A Pin widget (0x0A) | | | |

### *7.36.3. InPort1Mux (NID = 29h): ConSelectCtrl*

| Reg | Byte 4 (Bits 31:24) | Byte 3 (Bits 23:16) | Byte 2 (Bits 15:8) | Byte 1 (Bits 7:0) |
|---|---|---|---|---|
| Set | | | | 701h |
| Get | F0100h | | | |


©2014 TEMPO SEMICONDCUTOR, INC..

| Field Name | Bits | R/W | Default | Reset |
|---|---|---|---|---|
| Rsvd | 31:3 | R | 00000000h | N/A (Hard-coded) |
| | Reserved. | | | |
| Index | 2:0 | RW | 0h | POR - DAFG - ULR |
| | Connection select control index. | | | |

### *7.36.4. InPort1Mux (NID = 29h): PwrState*

| Reg | Byte 4 (Bits 31:24) | Byte 3 (Bits 23:16) | Byte 2 (Bits 15:8) | Byte 1 (Bits 7:0) |
|---|---|---|---|---|
| Set | | | | 705h |
| Get | F0500h | | | |

| Field Name | Bits | R/W | Default | Reset |
|---|---|---|---|---|
| Rsvd4 | 31:11 | R | 000000h | N/A (Hard-coded) |
| | Reserved. | | | |
| SettingsReset | 10 | R | 1h | POR - DAFG - ULR |
| | Indicates if any persistent settings in this Widget have been reset. Cleared by PwrState 'Get', or a 'Set' to any Verb in this Widget. | | | |
| Rsvd3 | 9 | R | 0h | N/A (Hard-coded) |
| | Reserved. | | | |
| Error | 8 | R | 0h | POR - DAFG - ULR |
| | Error indicator: 1 = cannot enter requested power state, 0 = no problem with requested power state. | | | |
| Rsvd2 | 7:6 | R | 0h | N/A (Hard-coded) |
| | Reserved. | | | |
| Act | 5:4 | R | 3h | POR - DAFG - LR |
| | Actual power state of this widget. | | | |


©2014 TEMPO SEMICONDCUTOR, INC..

| Field Name | Bits | R/W | Default | Reset |
|---|---|---|---|---|
| Rsvd1 | 3:2 | R | 0h | N/A (Hard-coded) |
| | Reserved. | | | |
| Set | 1:0 | RW | 0h | POR - DAFG - LR |
| | Current power state setting for this widget. | | | |


©2014 TEMPO SEMICONDCUTOR, INC..

## 7.12. ADC0 (NID = 1Ah): WCap

| Reg | Byte 4 (Bits 31:24) | Byte 3 (Bits 23:16) | Byte 2 (Bits 15:8) | Byte 1 (Bits 7:0) |
|---|---|---|---|---|
| Set | | | | |
| Get | F0009h | | | |

| Field Name | Bits | R/W | Default | Reset |
|---|---|---|---|---|
| Rsvd2 | 31:24 | R | 00h | N/A (Hard-coded) |
| | Reserved. | | | |
| Type | 23:20 | R | 1h | N/A (Hard-coded) |
| | Widget type:<br>0h = Out Converter<br>1h = In Converter<br>2h = Summing (Mixer)<br>3h = Selector (Mux)<br>4h = Pin Complex<br>5h = Power<br>6h = Volume Knob<br>7h = Beep Generator<br>8h-Eh = Reserved<br>Fh = Vendor Defined | | | |
| Delay | 19:16 | R | Dh | N/A (Hard-coded) |
| | Number of sample delays through widget. | | | |
| Rsvd1 | 15:12 | R | 0h | N/A (Hard-coded) |
| | Reserved. | | | |
| SwapCap | 11 | R | 0h | N/A (Hard-coded) |
| | Left/right swap support: 1 = yes, 0 = no. | | | |
| PwrCntrl | 10 | R | 1h | N/A (Hard-coded) |
| | Power state support: 1 = yes, 0 = no. | | | |
| Dig | 9 | R | 0h | N/A (Hard-coded) |
| | Digital stream support: 1 = yes (digital), 0 = no (analog). | | | |


©2014 TEMPO SEMICONDCUTOR, INC..

| Field Name | Bits | R/W | Default | Reset |
|---|---|---|---|---|
| ConnList | 8 | R | 1h | N/A (Hard-coded) |
| | Connection list present: 1 = yes, 0 = no. | | | |
| UnSolCap | 7 | R | 0h | N/A (Hard-coded) |
| | Unsolicited response support: 1 = yes, 0 = no. | | | |
| ProcWidget | 6 | R | 1h | N/A (Hard-coded) |
| | Processing state support: 1 = yes, 0 = no. | | | |
| Stripe | 5 | R | 0h | N/A (Hard-coded) |
| | Striping support: 1 = yes, 0 = no. | | | |
| FormatOvrd | 4 | R | 0h | N/A (Hard-coded) |
| | Stream format override: 1 = yes, 0 = no. | | | |
| AmpParOvrd | 3 | R | 0h | N/A (Hard-coded) |
| | Amplifier capabilities override: 1 = yes, no. | | | |
| OutAmpPrsnt | 2 | R | 0h | N/A (Hard-coded) |
| | Output amp present: 1 = yes, 0 = no. | | | |
| InAmpPrsnt | 1 | R | 0h | N/A (Hard-coded) |
| | Input amp present: 1 = yes, 0 = no. | | | |
| Stereo | 0 | R | 1h | N/A (Hard-coded) |
| | Stereo stream support: 1 = yes (stereo), 0 = no (mono). | | | |

### *7.12.1. ADC0 (NID = 1Ah): ConLst*

| Reg | Byte 4 (Bits 31:24) | Byte 3 (Bits 23:16) | Byte 2 (Bits 15:8) | Byte 1 (Bits 7:0) |
|---|---|---|---|---|
| Set | | | | |
| Get | F000Eh | | | |


©2014 TEMPO SEMICONDCUTOR, INC..

| Field Name | Bits | R/W | Default | Reset |
|---|---|---|---|---|
| Rsvd | 31:8 | R | 000000h | N/A (Hard-coded) |
| | Reserved. | | | |
| LForm | 7 | R | 0h | N/A (Hard-coded) |
| | Connection list format: 1 = long-form (15-bit) NID entries, 0 = short-form (7-bit) NID entries. | | | |
| ConL | 6:0 | R | 01h | N/A (Hard-coded) |
| | Number of NID entries in connection list. | | | |

### *7.12.2. ADC0 (NID = 1Ah): ConLstEntry0*

| Reg | Byte 4 (Bits 31:24) | Byte 3 (Bits 23:16) | Byte 2 (Bits 15:8) | Byte 1 (Bits 7:0) |
|---|---|---|---|---|
| Set | | | | |
| Get | F0200h | | | |

| Field Name | Bits | R/W | Default | Reset |
|---|---|---|---|---|
| ConL3 | 31:24 | R | 00h | N/A (Hard-coded) |
| | Unused list entry. | | | |
| ConL2 | 23:16 | R | 00h | N/A (Hard-coded) |
| | Unused list entry. | | | |
| ConL1 | 15:8 | R | 00h | N/A (Hard-coded) |
| | Unused list entry. | | | |
| ConL0 | 7:0 | R | 20h | N/A (Hard-coded) |
| | ADC0Mux Selector widget (0x20) | | | |

### *7.12.3. ADC0 (NID = 1Ah): Cnvtr*

| Reg | Byte 4 (Bits 31:24) | Byte 3 (Bits 23:16) | Byte 2 (Bits 15:8) | Byte 1 (Bits 7:0) |
|---|---|---|---|---|
| Set | | | 2h | |


©2014 TEMPO SEMICONDCUTOR, INC..

### 7.12.3. ADC0 (NID = 1Ah): Cnvtr

| Reg | Byte 4 (Bits 31:24) | Byte 3 (Bits 23:16) | Byte 2 (Bits 15:8) | Byte 1 (Bits 7:0) |
|---|---|---|---|---|
| Get | A0000h | | | |

| Field Name | Bits | R/W | Default | Reset |
|---|---|---|---|---|
| Rsvd2 | 31:16 | R | 0000h | N/A (Hard-coded) |
| | Reserved. | | | |
| StrmType | 15 | R | 0h | N/A (Hard-coded) |
| | Stream type: 1 = Non-PCM, 0 = PCM. | | | |
| FrmtSmplRate | 14 | RW | 0h | POR - DAFG - ULR |
| | Sample base rate: 1 = 44.1kHz, 0 = 48kHz. | | | |
| SmplRateMultp | 13:11 | RW | 0h | POR - DAFG - ULR |
| | Sample base rate multiple:<br>000b= x1 (48kHz/44.1kHz or less)<br>001b= x2 (96kHz/88.2kHz/32kHz)<br>010b= x3 (144kHz)<br>011b= x4 (192kHz/176.4kHz)<br>100b-111b Reserved | | | |
| SmplRateDiv | 10:8 | RW | 0h | POR - DAFG - ULR |
| | Sample base rate divider:<br>000b= Divide by 1 (48kHz/44.1kHz)<br>001b= Divide by 2 (24kHz/20.05kHz)<br>010b= Divide by 3 (16kHz/32kHz)<br>011b= Divide by 4 (11.025kHz)<br>100b= Divide by 5 (9.6kHz)<br>101b= Divide by 6 (8kHz)<br>110b= Divide by 7<br>111b= Divide by 8 (6kHz) | | | |
| Rsvd1 | 7 | R | 0h | N/A (Hard-coded) |
| | Reserved. | | | |


©2014 TEMPO SEMICONDCUTOR, INC..

| Field Name | Bits | R/W | Default | Reset |
|---|---|---|---|---|
| BitsPerSmpl | 6:4 | RW | 3h | POR - DAFG - ULR |
| | Bits per sample:<br>000b= 8 bits<br>001b= 16 bits<br>010b= 20 bits<br>011b= 24 bits<br>100b= 32 bits<br>101b-111b= Reserved | | | |
| NmbrChan | 3:0 | RW | 1h | POR - DAFG - ULR |
| | Total number of channels in the stream assigned to this converter:<br>0000b-1111b= 1-16 channels. | | | |

### *7.12.4. ADC0 (NID = 1Ah): ProcState*

| Reg | Byte 4 (Bits 31:24) | Byte 3 (Bits 23:16) | Byte 2 (Bits 15:8) | Byte 1 (Bits 7:0) |
|---|---|---|---|---|
| Set | | | | 703h |
| Get | F0300h | | | |

| Field Name | Bits | R/W | Default | Reset |
|---|---|---|---|---|
| Rsvd2 | 31:8 | R | 000000h | N/A (Hard-coded) |
| | Reserved. | | | |
| HPFOCDIS | 7 | RW | 0h | POR - DAFG - ULR |
| | HPF offset calculation disable. 1 = calculation disabled; 0 = calculation enabled. | | | |
| Rsvd1 | 6:2 | R | 00h | N/A (Hard-coded) |
| | Reserved. | | | |
| ADCHPFByp | 1:0 | RW | 1h | POR - DAFG - ULR |
| | Processing State: 00b= bypass the ADC HPF ("off"), 01b-11b= ADC HPF is enabled ("on" or "benign"). | | | |


©2014 TEMPO SEMICONDCUTOR, INC..

### 7.12.5. ADC0 (NID = 1Ah): PwrState

| Reg | Byte 4 (Bits 31:24) | Byte 3 (Bits 23:16) | Byte 2 (Bits 15:8) | Byte 1 (Bits 7:0) |
|---|---|---|---|---|
| Set | | | | 705h |
| Get | F0500h | | | |

| Field Name | Bits | R/W | Default | Reset |
|---|---|---|---|---|
| Rsvd4 | 31:11 | R | 000000h | N/A (Hard-coded) |
| | Reserved. | | | |
| SettingsReset | 10 | R | 1h | POR - DAFG - ULR |
| | Indicates if any persistent settings in this Widget have been reset. Cleared by PwrState 'Get', or a 'Set' to any Verb in this Widget. | | | |
| Rsvd3 | 9 | R | 0h | N/A (Hard-coded) |
| | Reserved. | | | |
| Error | 8 | R | 0h | POR - DAFG - ULR |
| | Error indicator: 1 = cannot enter requested power state, 0 = no problem with requested power state. | | | |
| Rsvd2 | 7:6 | R | 0h | N/A (Hard-coded) |
| | Reserved. | | | |
| Act | 5:4 | R | 3h | POR - DAFG - LR |
| | Actual power state of this widget. | | | |
| Rsvd1 | 3:2 | R | 0h | N/A (Hard-coded) |
| | Reserved. | | | |
| Set | 1:0 | RW | 3h | POR - DAFG - LR |
| | Current power state setting for this widget. | | | |

### 7.12.6. ADC0 (NID = 1Ah): CnvtrID

| Reg | Byte 4 (Bits 31:24) | Byte 3 (Bits 23:16) | Byte 2 (Bits 15:8) | Byte 1 (Bits 7:0) |
|---|---|---|---|---|
| Set | | | | 706h |


©2014 TEMPO SEMICONDCUTOR, INC..

### 7.12.6. ADC0 (NID = 1Ah): CnvtrID

| Reg | Byte 4 (Bits 31:24) | Byte 3 (Bits 23:16) | Byte 2 (Bits 15:8) | Byte 1 (Bits 7:0) |
|---|---|---|---|---|
| Get | F0600h | | | |

| Field Name | Bits | R/W | Default | Reset |
|---|---|---|---|---|
| Rsvd | 31:8 | R | 000000h | N/A (Hard-coded) |
| | Reserved. | | | |
| Strm | 7:4 | RW | 0h | POR - S&DAFG - LR - PS |
| | Stream ID: 0h = Converter "off", 1h-Fh = valid ID's. | | | |
| Ch | 3:0 | RW | 0h | POR - S&DAFG - LR - PS |
| | Channel assignment ("Ch" and "Ch+1" assigned as a pair, for a stereo converter). | | | |


©2014 TEMPO SEMICONDCUTOR, INC..

## 7.13. ADC1 (NID = 1Bh): WCap

| Reg | Byte 4 (Bits 31:24) | Byte 3 (Bits 23:16) | Byte 2 (Bits 15:8) | Byte 1 (Bits 7:0) |
|---|---|---|---|---|
| Set | | | | |
| Get | F0009h | | | |

| Field Name | Bits | R/W | Default | Reset |
|---|---|---|---|---|
| Rsvd2 | 31:24 | R | 00h | N/A (Hard-coded) |
| | Reserved. | | | |
| Type | 23:20 | R | 1h | N/A (Hard-coded) |
| | Widget type:<br>0h = Out Converter<br>1h = In Converter<br>2h = Summing (Mixer)<br>3h = Selector (Mux)<br>4h = Pin Complex<br>5h = Power<br>6h = Volume Knob<br>7h = Beep Generator<br>8h-Eh = Reserved<br>Fh = Vendor Defined | | | |
| Delay | 19:16 | R | Dh | N/A (Hard-coded) |
| | Number of sample delays through widget. | | | |
| Rsvd1 | 15:12 | R | 0h | N/A (Hard-coded) |
| | Reserved. | | | |
| SwapCap | 11 | R | 0h | N/A (Hard-coded) |
| | Left/right swap support: 1 = yes, 0 = no. | | | |
| PwrCntrl | 10 | R | 1h | N/A (Hard-coded) |
| | Power state support: 1 = yes, 0 = no. | | | |
| Dig | 9 | R | 0h | N/A (Hard-coded) |
| | Digital stream support: 1 = yes (digital), 0 = no (analog). | | | |
| ConnList | 8 | R | 1h | N/A (Hard-coded) |
| | Connection list present: 1 = yes, 0 = no. | | | |


©2014 TEMPO SEMICONDCUTOR, INC..

| Field Name | Bits | R/W | Default | Reset |
|---|---|---|---|---|
| UnSolCap | 7 | R | 0h | N/A (Hard-coded) |
| | Unsolicited response support: 1 = yes, 0 = no. | | | |
| ProcWidget | 6 | R | 1h | N/A (Hard-coded) |
| | Processing state support: 1 = yes, 0 = no. | | | |
| Stripe | 5 | R | 0h | N/A (Hard-coded) |
| | Striping support: 1 = yes, 0 = no. | | | |
| FormatOvrd | 4 | R | 0h | N/A (Hard-coded) |
| | Stream format override: 1 = yes, 0 = no. | | | |
| AmpParOvrd | 3 | R | 0h | N/A (Hard-coded) |
| | Amplifier capabilities override: 1 = yes, no. | | | |
| OutAmpPrsnt | 2 | R | 0h | N/A (Hard-coded) |
| | Output amp present: 1 = yes, 0 = no. | | | |
| InAmpPrsnt | 1 | R | 0h | N/A (Hard-coded) |
| | Input amp present: 1 = yes, 0 = no. | | | |
| Stereo | 0 | R | 1h | N/A (Hard-coded) |
| | Stereo stream support: 1 = yes (stereo), 0 = no (mono). | | | |

### *7.13.1. ADC1 (NID = 1Bh): ConLst*

| Reg | Byte 4 (Bits 31:24) | Byte 3 (Bits 23:16) | Byte 2 (Bits 15:8) | Byte 1 (Bits 7:0) |
|---|---|---|---|---|
| Set | | | | |
| Get | F000Eh | | | |

| Field Name | Bits | R/W | Default | Reset |
|---|---|---|---|---|
| Rsvd | 31:8 | R | 000000h | N/A (Hard-coded) |
| | Reserved. | | | |


©2014 TEMPO SEMICONDCUTOR, INC..

| Field Name | Bits | R/W | Default | Reset |
|---|---|---|---|---|
| LForm | 7 | R | 0h | N/A (Hard-coded) |
| | Connection list format: 1 = long-form (15-bit) NID entries, 0 = short-form (7-bit) NID entries. | | | |
| ConL | 6:0 | R | 01h | N/A (Hard-coded) |
| | Number of NID entries in connection list. | | | |

### *7.13.2. ADC1 (NID = 1Bh): ConLstEntry0*

| Reg | Byte 4 (Bits 31:24) | Byte 3 (Bits 23:16) | Byte 2 (Bits 15:8) | Byte 1 (Bits 7:0) |
|---|---|---|---|---|
| Set | | | | |
| Get | F0200h | | | |

| Field Name | Bits | R/W | Default | Reset |
|---|---|---|---|---|
| ConL3 | 31:24 | R | 00h | N/A (Hard-coded) |
| | Unused list entry. | | | |
| ConL2 | 23:16 | R | 00h | N/A (Hard-coded) |
| | Unused list entry. | | | |
| ConL1 | 15:8 | R | 00h | N/A (Hard-coded) |
| | Unused list entry. | | | |
| ConL0 | 7:0 | R | 21h | N/A (Hard-coded) |
| | ADC1Mux widget (0x21) | | | |

### *7.13.3. ADC1 (NID = 1Bh): Cnvtr*

| Reg | Byte 4 (Bits 31:24) | Byte 3 (Bits 23:16) | Byte 2 (Bits 15:8) | Byte 1 (Bits 7:0) |
|---|---|---|---|---|
| Set | | | 2h | |
| Get | A0000h | | | |


©2014 TEMPO SEMICONDCUTOR, INC..

| Field Name | Bits | R/W | Default | Reset |
|---|---|---|---|---|
| Rsvd2 | 31:16 | R | 0000h | N/A (Hard-coded) |
| | Reserved. | | | |
| StrmType | 15 | R | 0h | N/A (Hard-coded) |
| | Stream type: 1 = Non-PCM, 0 = PCM. | | | |
| FrmtSmplRate | 14 | RW | 0h | POR - DAFG - ULR |
| | Sample base rate: 1 = 44.1kHz, 0 = 48kHz. | | | |
| SmplRateMultp | 13:11 | RW | 0h | POR - DAFG - ULR |
| | Sample base rate multiple:<br>000b= x1 (48kHz/44.1kHz or less)<br>001b= x2 (96kHz/88.2kHz/32kHz)<br>010b= x3 (144kHz)<br>011b= x4 (192kHz/176.4kHz)<br>100b-111b Reserved | | | |
| SmplRateDiv | 10:8 | RW | 0h | POR - DAFG - ULR |
| | Sample base rate divider:<br>000b= Divide by 1 (48kHz/44.1kHz)<br>001b= Divide by 2 (24kHz/20.05kHz)<br>010b= Divide by 3 (16kHz/32kHz)<br>011b= Divide by 4 (11.025kHz)<br>100b= Divide by 5 (9.6kHz)<br>101b= Divide by 6 (8kHz)<br>110b= Divide by 7<br>111b= Divide by 8 (6kHz) | | | |
| Rsvd1 | 7 | R | 0h | N/A (Hard-coded) |
| | Reserved. | | | |
| BitsPerSmpl | 6:4 | RW | 3h | POR - DAFG - ULR |
| | Bits per sample:<br>000b= 8 bits<br>001b= 16 bits<br>010b= 20 bits<br>011b= 24 bits<br>100b= 32 bits<br>101b-111b= Reserved | | | |


©2014 TEMPO SEMICONDCUTOR, INC..

| Field Name | Bits | R/W | Default | Reset |
|---|---|---|---|---|
| NmbrChan | 3:0 | RW | 1h | POR - DAFG - ULR |
| | Total number of channels in the stream assigned to this converter: 0000b-1111b= 1-16 channels. | | | |

### 7.13.4. ADC1 (NID = 1Bh): ProcState

| Reg | Byte 4 (Bits 31:24) | Byte 3 (Bits 23:16) | Byte 2 (Bits 15:8) | Byte 1 (Bits 7:0) |
|---|---|---|---|---|
| Set | | | | 703h |
| Get | F0300h | | | |

| Field Name | Bits | R/W | Default | Reset |
|---|---|---|---|---|
| Rsvd2 | 31:8 | R | 000000h | N/A (Hard-coded) |
| | Reserved. | | | |
| HPFOCDIS | 7 | RW | 0h | POR - DAFG - ULR |
| | HPF offset calculation disable. 1 = calculation disabled; 0 = calculation enabled. | | | |
| Rsvd1 | 6:2 | R | 00h | N/A (Hard-coded) |
| | Reserved. | | | |
| ADCHPFByp | 1:0 | RW | 1h | POR - DAFG - ULR |
| | Processing State: 00b= bypass the ADC HPF ("off"), 01b-11b= ADC HPF is enabled ("on" or "benign"). | | | |

### 7.13.5. ADC1 (NID = 1Bh): PwrState

| Reg | Byte 4 (Bits 31:24) | Byte 3 (Bits 23:16) | Byte 2 (Bits 15:8) | Byte 1 (Bits 7:0) |
|---|---|---|---|---|
| Set | | | | 705h |
| Get | F0500h | | | |


©2014 TEMPO SEMICONDCUTOR, INC..

| Field Name | Bits | R/W | Default | Reset |
|---|---|---|---|---|
| Rsvd4 | 31:11 | R | 000000h | N/A (Hard-coded) |
| | Reserved. | | | |
| SettingsReset | 10 | R | 1h | POR - DAFG - ULR |
| | Indicates if any persistent settings in this Widget have been reset. Cleared by PwrState 'Get', or a 'Set' to any Verb in this Widget. | | | |
| Rsvd3 | 9 | R | 0h | N/A (Hard-coded) |
| | Reserved. | | | |
| Error | 8 | R | 0h | POR - DAFG - ULR |
| | Error indicator: 1 = cannot enter requested power state, 0 = no problem with requested power state. | | | |
| Rsvd2 | 7:6 | R | 0h | N/A (Hard-coded) |
| | Reserved. | | | |
| Act | 5:4 | R | 3h | POR - DAFG - LR |
| | Actual power state of this widget. | | | |
| Rsvd1 | 3:2 | R | 0h | N/A (Hard-coded) |
| | Reserved. | | | |
| Set | 1:0 | RW | 3h | POR - DAFG - LR |
| | Current power state setting for this widget. | | | |

### *7.13.6. ADC1 (NID = 1Bh): CnvtrID*

| Reg | Byte 4 (Bits 31:24) | Byte 3 (Bits 23:16) | Byte 2 (Bits 15:8) | Byte 1 (Bits 7:0) |
|---|---|---|---|---|
| Set | | | | 706h |
| Get | F0600h | | | |


©2014 TEMPO SEMICONDCUTOR, INC..

| Field Name | Bits | R/W | Default | Reset |
|---|---|---|---|---|
| Rsvd | 31:8 | R | 000000h | N/A (Hard-coded) |
| | Reserved. | | | |
| Strm | 7:4 | RW | 0h | POR - S&DAFG - LR - PS |
| | Stream ID: 0h = Converter "off", 1h-Fh = valid ID's. | | | |
| Ch | 3:0 | RW | 0h | POR - S&DAFG - LR - PS |
| | Channel assignment ("Ch" and "Ch+1" assigned as a pair, for a stereo converter). | | | |


©2014 TEMPO SEMICONDCUTOR, INC..

## 7.14. DigBeep (NID = 1Ch): WCap

| Reg | Byte 4 (Bits 31:24) | Byte 3 (Bits 23:16) | Byte 2 (Bits 15:8) | Byte 1 (Bits 7:0) |
|---|---|---|---|---|
| Set | | | | |
| Get | F0009h | | | |

| Field Name | Bits | R/W | Default | Reset |
|---|---|---|---|---|
| Rsvd4 | 31:24 | R | 00h | N/A (Hard-coded) |
| | Reserved. | | | |
| Type | 23:20 | R | 7h | N/A (Hard-coded) |
| | Widget type:<br>0h = Out Converter<br>1h = In Converter<br>2h = Summing (Mixer)<br>3h = Selector (Mux)<br>4h = Pin Complex<br>5h = Power<br>6h = Volume Knob<br>7h = Beep Generator<br>8h-Eh = Reserved<br>Fh = Vendor Defined | | | |
| Rsvd3 | 19:11 | R | 0h | N/A (Hard-coded) |
| | Reserved. | | | |
| PwrCntrl | 10 | R | 1h | N/A (Hard-coded) |
| | Power state support: 1 = yes, 0 = no." | | | |
| Rsvd2 | 9:4 | R | 0h | N/A (Hard-coded) |
| | Reserved | | | |
| AmpParOvrd | 3 | R | 1h | N/A (Hard-coded) |
| | Amplifier capabilities override: 1 = yes, no. | | | |
| OutAmpPrsnt | 2 | R | 1h | N/A (Hard-coded) |
| | Output amp present: 1 = yes, 0 = no. | | | |
| Rsvd1 | 1:0 | R | 0h | N/A (Hard-coded) |
| | Reserved. | | | |


©2014 TEMPO SEMICONDCUTOR, INC..

### *7.14.1. DigBeep (NID = 1Ch): OutAmpCap*

| Reg | Byte 4 (Bits 31:24) | Byte 3 (Bits 23:16) | Byte 2 (Bits 15:8) | Byte 1 (Bits 7:0) |
|---|---|---|---|---|
| Set | | | | |
| Get | F0012h | | | |

| Field Name | Bits | R/W | Default | Reset |
|---|---|---|---|---|
| Mute | 31 | R | 1h | N/A (Hard-coded) |
| | Mute support: 1 = yes, 0 = no. | | | |
| Rsvd3 | 30:23 | R | 00h | N/A (Hard-coded) |
| | Reserved. | | | |
| StepSize | 22:16 | R | 17h | N/A (Hard-coded) |
| | Size of each step in the gain range: 0 to 127 = .25dB to 32dB, in .25dB steps. | | | |
| Rsvd2 | 15 | R | 0h | N/A (Hard-coded) |
| | Reserved. | | | |
| NumSteps | 14:8 | R | 03h | N/A (Hard-coded) |
| | Number of gains steps (number of possible settings - 1). | | | |
| Rsvd1 | 7 | R | 0h | N/A (Hard-coded) |
| | Reserved. | | | |
| Offset | 6:0 | R | 03h | N/A (Hard-coded) |
| | Indicates which step is 0dB | | | |

### *7.14.2. DigBeep (NID = 1Ch): OutAmpLeft*

| Reg | Byte 4 (Bits 31:24) | Byte 3 (Bits 23:16) | Byte 2 (Bits 15:8) | Byte 1 (Bits 7:0) |
|---|---|---|---|---|
| Set | | | | 3A0h |
| Get | BA000h | | | |


©2014 TEMPO SEMICONDCUTOR, INC..

| Field Name | Bits | R/W | Default | Reset |
|---|---|---|---|---|
| Rsvd2 | 31:8 | R | 000000h | N/A (Hard-coded) |
| | Reserved. | | | |
| Mute | 7 | RW | 0h | POR - DAFG - ULR |
| | Amp mute: 1 = muted, 0 = not muted. | | | |
| Rsvd1 | 6:2 | R | 00h | N/A (Hard-coded) |
| | Reserved. | | | |
| Gain | 1:0 | RW | 1h | POR - DAFG - ULR |
| | Amp gain step number (see OutAmpCap parameter pertaining to this widget). | | | |

### *7.14.3. DigBeep (NID = 1Ch): PwrState*

| Reg | Byte 4 (Bits 31:24) | Byte 3 (Bits 23:16) | Byte 2 (Bits 15:8) | Byte 1 (Bits 7:0) |
|---|---|---|---|---|
| Set | | | | 705h |
| Get | F0500h | | | |

| Field Name | Bits | R/W | Default | Reset |
|---|---|---|---|---|
| Rsvd4 | 31:11 | R | 000000h | N/A (Hard-coded) |
| | Reserved. | | | |
| SettingsReset | 10 | R | 1h | POR - DAFG - ULR |
| | Indicates if any persistent settings in this Widget have been reset. Cleared by PwrState 'Get', or a 'Set' to any Verb in this Widget. | | | |
| Rsvd3 | 9 | R | 0h | N/A (Hard-coded) |
| | Reserved. | | | |
| Error | 8 | R | 0h | POR - DAFG - ULR |
| | Error indicator: 1 = cannot enter requested power state, 0 = no problem with requested power state. | | | |


©2014 TEMPO SEMICONDCUTOR, INC..

| Field Name | Bits | R/W | Default | Reset |
|---|---|---|---|---|
| Rsvd2 | 7:6 | R | 0h | N/A (Hard-coded) |
| | Reserved. | | | |
| Act | 5:4 | R | 3h | POR - DAFG - LR |
| | Actual power state of this widget. | | | |
| Rsvd1 | 3:2 | R | 0h | N/A (Hard-coded) |
| | Reserved. | | | |
| Set | 1:0 | RW | 0h | POR - DAFG - LR |
| | Current power state setting for this widget. | | | |

### *7.14.4. DigBeep (NID = 1Ch): Gen*

| Reg | Byte 4 (Bits 31:24) | Byte 3 (Bits 23:16) | Byte 2 (Bits 15:8) | Byte 1 (Bits 7:0) |
|---|---|---|---|---|
| Set | | | | 70Ah |
| Get | F0A00h | | | |

| Field Name | Bits | R/W | Default | Reset |
|---|---|---|---|---|
| Rsvd | 31:8 | R | 000000h | N/A (Hard-coded) |
| | Reserved. | | | |
| Divider | 7:0 | RW | 00h | POR - DAFG - LR |
| | Enable internal PC-Beep generation. Divider == 00h disables internal PC Beep generation and enables normal operation of the codec. Divider != 00h generates the beep tone on all Pin Complexes that are currently configured as outputs. The HD Audio spec states that the beep tone frequency = (48kHz HD Audio SYNC rate) / (4*Divider), producing tones from 47 Hz to 12 kHz (logarithmic scale). | | | |


©2014 TEMPO SEMICONDCUTOR, INC..

## 7.15. Mixer (NID = 1Dh): WCap

| Reg | Byte 4 (Bits 31:24) | Byte 3 (Bits 23:16) | Byte 2 (Bits 15:8) | Byte 1 (Bits 7:0) |
|---|---|---|---|---|
| Set | | | | |
| Get | F0009h | | | |

| Field Name | Bits | R/W | Default | Reset |
|---|---|---|---|---|
| Rsvd2 | 31:24 | R | 00h | N/A (Hard-coded) |
| | Reserved. | | | |
| Type | 23:20 | R | 2h | N/A (Hard-coded) |
| | Widget type:<br>0h = Out Converter<br>1h = In Converter<br>2h = Summing (Mixer)<br>3h = Selector (Mux)<br>4h = Pin Complex<br>5h = Power<br>6h = Volume Knob<br>7h = Beep Generator<br>8h-Eh = Reserved<br>Fh = Vendor Defined | | | |
| Delay | 19:16 | R | 0h | N/A (Hard-coded) |
| | Number of sample delays through widget. | | | |
| Rsvd1 | 15:12 | R | 0h | N/A (Hard-coded) |
| | Reserved. | | | |
| SwapCap | 11 | R | 0h | N/A (Hard-coded) |
| | Left/right swap support: 1 = yes, 0 = no. | | | |
| PwrCntrl | 10 | R | 1h | N/A (Hard-coded) |
| | Power state support: 1 = yes, 0 = no. | | | |
| Dig | 9 | R | 0h | N/A (Hard-coded) |
| | Digital stream support: 1 = yes (digital), 0 = no (analog). | | | |
| ConnList | 8 | R | 1h | N/A (Hard-coded) |
| | Connection list present: 1 = yes, 0 = no. | | | |


©2014 TEMPO SEMICONDCUTOR, INC..

| Field Name | Bits | R/W | Default | Reset |
|---|---|---|---|---|
| UnSolCap | 7 | R | 0h | N/A (Hard-coded) |
| | Unsolicited response support: 1 = yes, 0 = no. | | | |
| ProcWidget | 6 | R | 0h | N/A (Hard-coded) |
| | Processing state support: 1 = yes, 0 = no. | | | |
| Stripe | 5 | R | 0h | N/A (Hard-coded) |
| | Striping support: 1 = yes, 0 = no. | | | |
| FormatOvrd | 4 | R | 0h | N/A (Hard-coded) |
| | Stream format override: 1 = yes, 0 = no. | | | |
| AmpParOvrd | 3 | R | 1h | N/A (Hard-coded) |
| | Amplifier capabilities override: 1 = yes, no. | | | |
| OutAmpPrsnt | 2 | R | 0h | N/A (Hard-coded) |
| | Output amp present: 1 = yes, 0 = no. | | | |
| InAmpPrsnt | 1 | R | 1h | N/A (Hard-coded) |
| | Input amp present: 1 = yes, 0 = no. | | | |
| Stereo | 0 | R | 1h | N/A (Hard-coded) |
| | Stereo stream support: 1 = yes (stereo), 0 = no (mono). | | | |

### *7.15.1. Mixer (NID = 1Dh): InAmpCap*

| Reg | Byte 4 (Bits 31:24) | Byte 3 (Bits 23:16) | Byte 2 (Bits 15:8) | Byte 1 (Bits 7:0) |
|---|---|---|---|---|
| Set | | | | |
| Get | F000Dh | | | |

| Field Name | Bits | R/W | Default | Reset |
|---|---|---|---|---|
| Mute | 31 | R | 1h | N/A (Hard-coded) |
| | Mute support: 1 = yes, 0 = no. | | | |


©2014 TEMPO SEMICONDCUTOR, INC..

| Field Name | Bits | R/W | Default | Reset |
|---|---|---|---|---|
| Rsvd3 | 30:23 | R | 00h | N/A (Hard-coded) |
| | Reserved. | | | |
| StepSize | 22:16 | R | 05h | N/A (Hard-coded) |
| | Size of each step in the gain range: 0 to 127 = .25dB to 32dB, in .25dB steps. | | | |
| Rsvd2 | 15 | R | 0h | N/A (Hard-coded) |
| | Reserved. | | | |
| NumSteps | 14:8 | R | 1Fh | N/A (Hard-coded) |
| | Number of gains steps (number of possible settings - 1). | | | |
| Rsvd1 | 7 | R | 0h | N/A (Hard-coded) |
| | Reserved. | | | |
| Offset | 6:0 | R | 17h | N/A (Hard-coded) |
| | Indicates which step is 0dB | | | |

### *7.15.2. Mixer (NID = 1Dh): ConLst*

| Reg | Byte 4 (Bits 31:24) | Byte 3 (Bits 23:16) | Byte 2 (Bits 15:8) | Byte 1 (Bits 7:0) |
|---|---|---|---|---|
| Set | | | | |
| Get | F000Eh | | | |

| Field Name | Bits | R/W | Default | Reset |
|---|---|---|---|---|
| Rsvd | 31:8 | R | 000000h | N/A (Hard-coded) |
| | Reserved. | | | |
| LForm | 7 | R | 0h | N/A (Hard-coded) |
| | Connection list format: 1 = long-form (15-bit) NID entries, 0 = short-form (7-bit) NID entries. | | | |
| ConL | 6:0 | R | 03h | N/A (Hard-coded) |
| | Number of NID entries in connection list. | | | |


©2014 TEMPO SEMICONDCUTOR, INC..

### 7.15.3. Mixer (NID = 1Dh): ConLstEntry0

| Reg | Byte 4 (Bits 31:24) | Byte 3 (Bits 23:16) | Byte 2 (Bits 15:8) | Byte 1 (Bits 7:0) |
|---|---|---|---|---|
| Set | | | | |
| Get | F0200h | | | |

| Field Name | Bits | R/W | Default | Reset |
|---|---|---|---|---|
| ConL3 | 31:24 | R | 00h | N/A (Hard-coded) |
| | Unused | | | |
| ConL2 | 23:16 | R | 12h | N/A (Hard-coded) |
| | CD widget (0x12). Uses InAmpLeft4/InAmpRight4 controls. | | | |
| ConL1Range | 15 | R | 1h | N/A (Hard-coded) |
| | ConL0..ConL1 define a range of selectable input | | | |
| ConL1 | 14:8 | R | 2Bh | N/A (Hard-coded) |
| | Inport3 Mux widget (0x2B). Uses InAmpLeft3/InAmpRight3 controls | | | |
| ConL0 | 7:0 | R | 28h | N/A (Hard-coded) |
| | Port C Pin widget (0x0C). Uses InAmpLeft0/InAmpRight0 controls. | | | |

### 7.15.4. Mixer (NID = 1Dh): InAmpLeft0

| Reg | Byte 4 (Bits 31:24) | Byte 3 (Bits 23:16) | Byte 2 (Bits 15:8) | Byte 1 (Bits 7:0) |
|---|---|---|---|---|
| Set | | | | 360h |
| Get | B2000h | | | |

| Field Name | Bits | R/W | Default | Reset |
|---|---|---|---|---|
| Rsvd2 | 31:8 | R | 000000h | N/A (Hard-coded) |
| | Reserved. | | | |
| Mute | 7 | RW | 1h | POR - DAFG - ULR |
| | Amp mute: 1 = muted, 0 = not muted. | | | |


©2014 TEMPO SEMICONDCUTOR, INC..

| Field Name | Bits | R/W | Default | Reset |
|---|---|---|---|---|
| Rsvd1 | 6:5 | R | 0h | N/A (Hard-coded) |
| | Reserved. | | | |
| Gain | 4:0 | RW | 17h | POR - DAFG - ULR |
| | Amp gain step number (see InAmpCap parameter pertaining to this widget). | | | |

### *7.15.5. Mixer (NID = 1Dh): InAmpRight0*

| Reg | Byte 4 (Bits 31:24) | Byte 3 (Bits 23:16) | Byte 2 (Bits 15:8) | Byte 1 (Bits 7:0) |
|---|---|---|---|---|
| Set | | | | 350h |
| Get | B0000h | | | |

| Field Name | Bits | R/W | Default | Reset |
|---|---|---|---|---|
| Rsvd2 | 31:8 | R | 000000h | N/A (Hard-coded) |
| | Reserved. | | | |
| Mute | 7 | RW | 1h | POR - DAFG - ULR |
| | Amp mute: 1 = muted, 0 = not muted. | | | |
| Rsvd1 | 6:5 | R | 0h | N/A (Hard-coded) |
| | Reserved. | | | |
| Gain | 4:0 | RW | 17h | POR - DAFG - ULR |
| | Amp gain step number (see InAmpCap parameter pertaining to this widget). | | | |

### *7.15.6. Mixer (NID = 1Dh): InAmpLeft1*

| Reg | Byte 4 (Bits 31:24) | Byte 3 (Bits 23:16) | Byte 2 (Bits 15:8) | Byte 1 (Bits 7:0) |
|---|---|---|---|---|
| Set | | | | 361h |
| Get | B2001h | | | |


©2014 TEMPO SEMICONDCUTOR, INC..

| Field Name | Bits | R/W | Default | Reset |
|---|---|---|---|---|
| Rsvd2 | 31:8 | R | 000000h | N/A (Hard-coded) |
| | Reserved. | | | |
| Mute | 7 | RW | 1h | POR - DAFG - ULR |
| | Amp mute: 1 = muted, 0 = not muted. | | | |
| Rsvd1 | 6:5 | R | 0h | N/A (Hard-coded) |
| | Reserved. | | | |
| Gain | 4:0 | RW | 17h | POR - DAFG - ULR |
| | Amp gain step number (see InAmpCap parameter pertaining to this widget). | | | |

### *7.15.7. Mixer (NID = 1Dh): InAmpRight1*

| Reg | Byte 4 (Bits 31:24) | Byte 3 (Bits 23:16) | Byte 2 (Bits 15:8) | Byte 1 (Bits 7:0) |
|---|---|---|---|---|
| Set | | | | 351h |
| Get | B0001h | | | |

| Field Name | Bits | R/W | Default | Reset |
|---|---|---|---|---|
| Rsvd2 | 31:8 | R | 000000h | N/A (Hard-coded) |
| | Reserved. | | | |
| Mute | 7 | RW | 1h | POR - DAFG - ULR |
| | Amp mute: 1 = muted, 0 = not muted. | | | |
| Rsvd1 | 6:5 | R | 0h | N/A (Hard-coded) |
| | Reserved. | | | |
| Gain | 4:0 | RW | 17h | POR - DAFG - ULR |
| | Amp gain step number (see InAmpCap parameter pertaining to this widget). | | | |


©2014 TEMPO SEMICONDCUTOR, INC..

### 7.15.8. Mixer (NID = 1Dh): InAmpLeft2

| Reg | Byte 4 (Bits 31:24) | Byte 3 (Bits 23:16) | Byte 2 (Bits 15:8) | Byte 1 (Bits 7:0) |
|---|---|---|---|---|
| Set | | | | 362h |
| Get | B2002h | | | |

| Field Name | Bits | R/W | Default | Reset |
|---|---|---|---|---|
| Rsvd2 | 31:8 | R | 000000h | N/A (Hard-coded) |
| | Reserved. | | | |
| Mute | 7 | RW | 1h | POR - DAFG - ULR |
| | Amp mute: 1 = muted, 0 = not muted. | | | |
| Rsvd1 | 6:5 | R | 0h | N/A (Hard-coded) |
| | Reserved. | | | |
| Gain | 4:0 | RW | 17h | POR - DAFG - ULR |
| | Amp gain step number (see InAmpCap parameter pertaining to this widget). | | | |

### 7.15.9. Mixer (NID = 1Dh): InAmpRight2

| Reg | Byte 4 (Bits 31:24) | Byte 3 (Bits 23:16) | Byte 2 (Bits 15:8) | Byte 1 (Bits 7:0) |
|---|---|---|---|---|
| Set | | | | 352h |
| Get | B0002h | | | |

| Field Name | Bits | R/W | Default | Reset |
|---|---|---|---|---|
| Rsvd2 | 31:8 | R | 000000h | N/A (Hard-coded) |
| | Reserved. | | | |
| Mute | 7 | RW | 1h | POR - DAFG - ULR |
| | Amp mute: 1 = muted, 0 = not muted. | | | |
| Rsvd1 | 6:5 | R | 0h | N/A (Hard-coded) |
| | Reserved. | | | |


©2014 TEMPO SEMICONDCUTOR, INC..

| Field Name | Bits | R/W | Default | Reset |
|---|---|---|---|---|
| Gain | 4:0 | RW | 17h | POR - DAFG - ULR |
| | Amp gain step number (see InAmpCap parameter pertaining to this widget). | | | |

### *7.15.10. Mixer (NID = 1Dh): InAmpLeft3*

| Reg | Byte 4 (Bits 31:24) | Byte 3 (Bits 23:16) | Byte 2 (Bits 15:8) | Byte 1 (Bits 7:0) |
|---|---|---|---|---|
| Set | | | | 363h |
| Get | B2003h | | | |

| Field Name | Bits | R/W | Default | Reset |
|---|---|---|---|---|
| Rsvd2 | 31:8 | R | 000000h | N/A (Hard-coded) |
| | Reserved. | | | |
| Mute | 7 | RW | 1h | POR - DAFG - ULR |
| | Amp mute: 1 = muted, 0 = not muted. | | | |
| Rsvd1 | 6:5 | R | 0h | N/A (Hard-coded) |
| | Reserved. | | | |
| Gain | 4:0 | RW | 17h | POR - DAFG - ULR |
| | Amp gain step number (see InAmpCap parameter pertaining to this widget). | | | |

### *7.15.11. Mixer (NID = 1Dh): InAmpRight3*

| Reg | Byte 4 (Bits 31:24) | Byte 3 (Bits 23:16) | Byte 2 (Bits 15:8) | Byte 1 (Bits 7:0) |
|---|---|---|---|---|
| Set | | | | 353h |
| Get | B0003h | | | |

| Field Name | Bits | R/W | Default | Reset |
|---|---|---|---|---|
| Rsvd2 | 31:8 | R | 000000h | N/A (Hard-coded) |
| | Reserved. | | | |


©2014 TEMPO SEMICONDCUTOR, INC..

| Field Name | Bits | R/W | Default | Reset |
|---|---|---|---|---|
| Mute | 7 | RW | 1h | POR - DAFG - ULR |
| | Amp mute: 1 = muted, 0 = not muted. | | | |
| Rsvd1 | 6:5 | R | 0h | N/A (Hard-coded) |
| | Reserved. | | | |
| Gain | 4:0 | RW | 17h | POR - DAFG - ULR |
| | Amp gain step number (see InAmpCap parameter pertaining to this widget). | | | |

### *7.15.12. Mixer (NID = 1Dh): InAmpLeft4*

| Reg | Byte 4 (Bits 31:24) | Byte 3 (Bits 23:16) | Byte 2 (Bits 15:8) | Byte 1 (Bits 7:0) |
|---|---|---|---|---|
| Set | | | | 364h |
| Get | B2004h | | | |

| Field Name | Bits | R/W | Default | Reset |
|---|---|---|---|---|
| Rsvd2 | 31:8 | R | 000000h | N/A (Hard-coded) |
| | Reserved. | | | |
| Mute | 7 | RW | 1h | POR - DAFG - ULR |
| | Amp mute: 1 = muted, 0 = not muted. | | | |
| Rsvd1 | 6:5 | R | 0h | N/A (Hard-coded) |
| | Reserved. | | | |
| Gain | 4:0 | RW | 17h | POR - DAFG - ULR |
| | Amp gain step number (see InAmpCap parameter pertaining to this widget). | | | |

### *7.15.13. Mixer (NID = 1Dh): InAmpRight4*

| Reg | Byte 4 (Bits 31:24) | Byte 3 (Bits 23:16) | Byte 2 (Bits 15:8) | Byte 1 (Bits 7:0) |
|---|---|---|---|---|
| Set | | | | 354h |
| Get | B0004h | | | |


©2014 TEMPO SEMICONDCUTOR, INC..

| Field Name | Bits | R/W | Default | Reset |
|---|---|---|---|---|
| Rsvd2 | 31:8 | R | 000000h | N/A (Hard-coded) |
| | Reserved. | | | |
| Mute | 7 | RW | 1h | POR - DAFG - ULR |
| | Amp mute: 1 = muted, 0 = not muted. | | | |
| Rsvd1 | 6:5 | R | 0h | N/A (Hard-coded) |
| | Reserved. | | | |
| Gain | 4:0 | RW | 17h | POR - DAFG - ULR |
| | Amp gain step number (see InAmpCap parameter pertaining to this widget). | | | |

### *7.15.14. Mixer (NID = 1Dh): PwrState*

| Reg | Byte 4 (Bits 31:24) | Byte 3 (Bits 23:16) | Byte 2 (Bits 15:8) | Byte 1 (Bits 7:0) |
|---|---|---|---|---|
| Set | | | | 705h |
| Get | F0500h | | | |

| Field Name | Bits | R/W | Default | Reset |
|---|---|---|---|---|
| Rsvd4 | 31:11 | R | 000000h | N/A (Hard-coded) |
| | Reserved. | | | |
| SettingsReset | 10 | R | 1h | POR - DAFG - ULR |
| | Indicates if any persistent settings in this Widget have been reset. Cleared by PwrState 'Get', or a 'Set' to any Verb in this Widget. | | | |
| Rsvd3 | 9 | R | 0h | N/A (Hard-coded) |
| | Reserved. | | | |
| Error | 8 | R | 0h | POR - DAFG - ULR |
| | Error indicator: 1 = cannot enter requested power state, 0 = no problem with requested power state. | | | |


©2014 TEMPO SEMICONDCUTOR, INC..

| Field Name | Bits | R/W | Default | Reset |
|---|---|---|---|---|
| Rsvd2 | 7:6 | R | 0h | N/A (Hard-coded) |
| | Reserved. | | | |
| Act | 5:4 | R | 3h | POR - DAFG - LR |
| | Actual power state of this widget. | | | |
| Rsvd1 | 3:2 | R | 0h | N/A (Hard-coded) |
| | Reserved. | | | |
| Set | 1:0 | RW | 0h | POR - DAFG - LR |
| | Current power state setting for this widget. | | | |


©2014 TEMPO SEMICONDCUTOR, INC..

## 7.16. MixerOutVol (NID = 1Eh): WCap

| Reg | Byte 4 (Bits 31:24) | Byte 3 (Bits 23:16) | Byte 2 (Bits 15:8) | Byte 1 (Bits 7:0) |
|---|---|---|---|---|
| Set | | | | |
| Get | F0009h | | | |

| Field Name | Bits | R/W | Default | Reset |
|---|---|---|---|---|
| Rsvd2 | 31:24 | R | 00h | N/A (Hard-coded) |
| | Reserved. | | | |
| Type | 23:20 | R | 3h | N/A (Hard-coded) |
| | Widget type:<br>0h = Out Converter<br>1h = In Converter<br>2h = Summing (Mixer)<br>3h = Selector (Mux)<br>4h = Pin Complex<br>5h = Power<br>6h = Volume Knob<br>7h = Beep Generator<br>8h-Eh = Reserved<br>Fh = Vendor Defined | | | |
| Delay | 19:16 | R | 0h | N/A (Hard-coded) |
| | Number of sample delays through widget. | | | |
| Rsvd1 | 15:12 | R | 0h | N/A (Hard-coded) |
| | Reserved. | | | |
| SwapCap | 11 | R | 0h | N/A (Hard-coded) |
| | Left/right swap support: 1 = yes, 0 = no. | | | |
| PwrCntrl | 10 | R | 1h | N/A (Hard-coded) |
| | Power state support: 1 = yes, 0 = no. | | | |
| Dig | 9 | R | 0h | N/A (Hard-coded) |
| | Digital stream support: 1 = yes (digital), 0 = no (analog). | | | |
| ConnList | 8 | R | 1h | N/A (Hard-coded) |
| | Connection list present: 1 = yes, 0 = no. | | | |


©2014 TEMPO SEMICONDCUTOR, INC..

| Field Name | Bits | R/W | Default | Reset |
|---|---|---|---|---|
| UnSolCap | 7 | R | 0h | N/A (Hard-coded) |
| | Unsolicited response support: 1 = yes, 0 = no. | | | |
| ProcWidget | 6 | R | 0h | N/A (Hard-coded) |
| | Processing state support: 1 = yes, 0 = no. | | | |
| Stripe | 5 | R | 0h | N/A (Hard-coded) |
| | Striping support: 1 = yes, 0 = no. | | | |
| FormatOvrd | 4 | R | 0h | N/A (Hard-coded) |
| | Stream format override: 1 = yes, 0 = no. | | | |
| AmpParOvrd | 3 | R | 1h | N/A (Hard-coded) |
| | Amplifier capabilities override: 1 = yes, no. | | | |
| OutAmpPrsnt | 2 | R | 1h | N/A (Hard-coded) |
| | Output amp present: 1 = yes, 0 = no. | | | |
| InAmpPrsnt | 1 | R | 0h | N/A (Hard-coded) |
| | Input amp present: 1 = yes, 0 = no. | | | |
| Stereo | 0 | R | 1h | N/A (Hard-coded) |
| | Stereo stream support: 1 = yes (stereo), 0 = no (mono). | | | |

### *7.16.1. MixerOutVol (NID = 1Eh): ConLst*

| Reg | Byte 4 (Bits 31:24) | Byte 3 (Bits 23:16) | Byte 2 (Bits 15:8) | Byte 1 (Bits 7:0) |
|---|---|---|---|---|
| Set | | | | |
| Get | F000Eh | | | |

| Field Name | Bits | R/W | Default | Reset |
|---|---|---|---|---|
| Rsvd | 31:8 | R | 000000h | N/A (Hard-coded) |
| | Reserved. | | | |


©2014 TEMPO SEMICONDCUTOR, INC..

| Field Name | Bits | R/W | Default | Reset |
|---|---|---|---|---|
| LForm | 7 | R | 0h | N/A (Hard-coded) |
| | Connection list format: 1 = long-form (15-bit) NID entries, 0 = short-form (7-bit) NID entries. | | | |
| ConL | 6:0 | R | 01h | N/A (Hard-coded) |
| | Number of NID entries in connection list. | | | |

### *7.16.2. MixerOutVol (NID = 1Eh): ConLstEntry0*

| Reg | Byte 4 (Bits 31:24) | Byte 3 (Bits 23:16) | Byte 2 (Bits 15:8) | Byte 1 (Bits 7:0) |
|---|---|---|---|---|
| Set | | | | |
| Get | F0200h | | | |

| Field Name | Bits | R/W | Default | Reset |
|---|---|---|---|---|
| ConL3 | 31:24 | R | 00h | N/A (Hard-coded) |
| | Unused list entry. | | | |
| ConL2 | 23:16 | R | 00h | N/A (Hard-coded) |
| | Unused list entry. | | | |
| ConL1 | 15:8 | R | 00h | N/A (Hard-coded) |
| | Unused list entry. | | | |
| ConL0 | 7:0 | R | 1Dh | N/A (Hard-coded) |
| | Mixer Summing widget (0x1D) | | | |

### *7.16.3. MixerOutVol (NID = 1Dh): OutAmpCap*

| Reg | Byte 4 (Bits 31:24) | Byte 3 (Bits 23:16) | Byte 2 (Bits 15:8) | Byte 1 (Bits 7:0) |
|---|---|---|---|---|
| Set | | | | |
| Get | F0012h | | | |


©2014 TEMPO SEMICONDCUTOR, INC..

| Field Name | Bits | R/W | Default | Reset |
|---|---|---|---|---|
| Mute | 31 | R | 1h | N/A (Hard-coded) |
| | Mute support: 1 = yes, 0 = no. | | | |
| Rsvd3 | 30:23 | R | 00h | N/A (Hard-coded) |
| | Reserved. | | | |
| StepSize | 22:16 | R | 05h | N/A (Hard-coded) |
| | Size of each step in the gain range: 0 to 127 = .25dB to 32dB, in .25dB steps. | | | |
| Rsvd2 | 15 | R | 0h | N/A (Hard-coded) |
| | Reserved. | | | |
| NumSteps | 14:8 | R | 1Fh | N/A (Hard-coded) |
| | Number of gains steps (number of possible settings - 1). | | | |
| Rsvd1 | 7 | R | 0h | N/A (Hard-coded) |
| | Reserved. | | | |
| Offset | 6:0 | R | 1Fh | N/A (Hard-coded) |
| | Indicates which step is 0dB | | | |

### *7.16.4. MixerOutVol (NID = 1Dh): OutAmpLeft*

| Reg | Byte 4 (Bits 31:24) | Byte 3 (Bits 23:16) | Byte 2 (Bits 15:8) | Byte 1 (Bits 7:0) |
|---|---|---|---|---|
| Set | | | | 3A0h |
| Get | BA000h | | | |

| Field Name | Bits | R/W | Default | Reset |
|---|---|---|---|---|
| Rsvd2 | 31:8 | R | 000000h | N/A (Hard-coded) |
| | Reserved. | | | |
| Mute | 7 | RW | 1h | POR - DAFG - ULR |
| | Amp mute: 1 = muted, 0 = not muted. | | | |


©2014 TEMPO SEMICONDCUTOR, INC..

| Field Name | Bits | R/W | Default | Reset |
|---|---|---|---|---|
| Rsvd1 | 6:5 | R | 0h | N/A (Hard-coded) |
| | Reserved. | | | |
| Gain | 4:0 | RW | 1Fh | POR - DAFG - ULR |
| | Amp gain step number (see OutAmpCap parameter pertaining to this widget). | | | |

### *7.16.5. MixerOutVol (NID = 1Dh): OutAmpRight*

| Reg | Byte 4 (Bits 31:24) | Byte 3 (Bits 23:16) | Byte 2 (Bits 15:8) | Byte 1 (Bits 7:0) |
|---|---|---|---|---|
| Set | | | | 390h |
| Get | B8000h | | | |

| Field Name | Bits | R/W | Default | Reset |
|---|---|---|---|---|
| Rsvd2 | 31:8 | R | 000000h | N/A (Hard-coded) |
| | Reserved. | | | |
| Mute | 7 | RW | 1h | POR - DAFG - ULR |
| | Amp mute: 1 = muted, 0 = not muted. | | | |
| Rsvd1 | 6:5 | R | 0h | N/A (Hard-coded) |
| | Reserved. | | | |
| Gain | 4:0 | RW | 1Fh | POR - DAFG - ULR |
| | Amp gain step number (see OutAmpCap parameter pertaining to this widget). | | | |

### *7.16.6. MixerOutVol (NID = 1Dh): PwrState*

| Reg | Byte 4 (Bits 31:24) | Byte 3 (Bits 23:16) | Byte 2 (Bits 15:8) | Byte 1 (Bits 7:0) |
|---|---|---|---|---|
| Set | | | | 705h |
| Get | F0500h | | | |


©2014 TEMPO SEMICONDCUTOR, INC..

| Field Name | Bits | R/W | Default | Reset |
|---|---|---|---|---|
| Rsvd4 | 31:11 | R | 000000h | N/A (Hard-coded) |
| | Reserved. | | | |
| SettingsReset | 10 | R | 1h | POR - DAFG - ULR |
| | Indicates if any persistent settings in this Widget have been reset. Cleared by PwrState 'Get', or a 'Set' to any Verb in this Widget. | | | |
| Rsvd3 | 9 | R | 0h | N/A (Hard-coded) |
| | Reserved. | | | |
| Error | 8 | R | 0h | POR - DAFG - ULR |
| | Error indicator: 1 = cannot enter requested power state, 0 = no problem with requested power state. | | | |
| Rsvd2 | 7:6 | R | 0h | N/A (Hard-coded) |
| | Reserved. | | | |
| Act | 5:4 | R | 3h | POR - DAFG - LR |
| | Actual power state of this widget. | | | |
| Rsvd1 | 3:2 | R | 0h | N/A (Hard-coded) |
| | Reserved. | | | |
| Set | 1:0 | RW | 0h | POR - DAFG - LR |
| | Current power state setting for this widget. | | | |


©2014 TEMPO SEMICONDCUTOR, INC..

## 7.17. Vendor Reserved (NID = 1Fh)


©2014 TEMPO SEMICONDCUTOR, INC..

## 7.37. InPort2Mux (NID = 2Ah): WCap

| Reg | Byte 4 (Bits 31:24) | Byte 3 (Bits 23:16) | Byte 2 (Bits 15:8) | Byte 1 (Bits 7:0) |
|---|---|---|---|---|
| Set | | | | |
| Get | F0009h | | | |

| Field Name | Bits | R/W | Default | Reset |
|---|---|---|---|---|
| Rsvd2 | 31:24 | R | 00h | N/A (Hard-coded) |
| | Reserved. | | | |
| Type | 23:20 | R | 3h | N/A (Hard-coded) |
| | Widget type:<br>0h = Out Converter<br>1h = In Converter<br>2h = Summing (Mixer)<br>3h = Selector (Mux)<br>4h = Pin Complex<br>5h = Power<br>6h = Volume Knob<br>7h = Beep Generator<br>8h-Eh = Reserved<br>Fh = Vendor Defined | | | |
| Delay | 19:16 | R | 0h | N/A (Hard-coded) |
| | Number of sample delays through widget. | | | |
| Rsvd1 | 15:12 | R | 0h | N/A (Hard-coded) |
| | Reserved. | | | |
| SwapCap | 11 | R | 0h | N/A (Hard-coded) |
| | Left/right swap support: 1 = yes, 0 = no. | | | |
| PwrCntrl | 10 | R | 1h | N/A (Hard-coded) |
| | Power state support: 1 = yes, 0 = no. | | | |
| DigitalStrm | 9 | R | 0h | N/A (Hard-coded) |
| | Digital stream support: 1 = yes (digital), 0 = no (analog). | | | |
| ConnList | 8 | R | 1h | N/A (Hard-coded) |
| | Connection list present: 1 = yes, 0 = no. | | | |


©2014 TEMPO SEMICONDCUTOR, INC..

| Field Name | Bits | R/W | Default | Reset |
|---|---|---|---|---|
| UnsolCap | 7 | R | 0h | N/A (Hard-coded) |
| | Unsolicited response support: 1 = yes, 0 = no. | | | |
| ProcWidget | 6 | R | 0h | N/A (Hard-coded) |
| | Processing state support: 1 = yes, 0 = no. | | | |
| Stripe | 5 | R | 0h | N/A (Hard-coded) |
| | Striping support: 1 = yes, 0 = no. | | | |
| FormatOvrd | 4 | R | 0h | N/A (Hard-coded) |
| | Stream format override: 1 = yes, 0 = no. | | | |
| AmpParamOvrd | 3 | R | 0h | N/A (Hard-coded) |
| | Amplifier capabilities override: 1 = yes, no. | | | |
| OutAmpPrsnt | 2 | R | 0h | N/A (Hard-coded) |
| | Output amp present: 1 = yes, 0 = no. | | | |
| InAmpPrsnt | 1 | R | 0h | N/A (Hard-coded) |
| | Input amp present: 1 = yes, 0 = no. | | | |
| Stereo | 0 | R | 1h | N/A (Hard-coded) |
| | Stereo stream support: 1 = yes (stereo), 0 = no (mono). | | | |

### *7.37.1. InPort2Mux (NID = 2Ah): ConLst*

| Reg | Byte 4 (Bits 31:24) | Byte 3 (Bits 23:16) | Byte 2 (Bits 15:8) | Byte 1 (Bits 7:0) |
|---|---|---|---|---|
| Set | | | | |
| Get | F000Eh | | | |

| Field Name | Bits | R/W | Default | Reset |
|---|---|---|---|---|
| Rsvd | 31:8 | R | 000000h | N/A (Hard-coded) |
| | Reserved. | | | |


©2014 TEMPO SEMICONDCUTOR, INC..

| Field Name | Bits | R/W | Default | Reset |
|---|---|---|---|---|
| LForm | 7 | R | 0h | N/A (Hard-coded) |
| | Connection list format: 1 = long-form (15-bit) NID entries, 0 = short-form (7-bit) NID entries. | | | |
| ConL | 6:0 | R | 04h | N/A (Hard-coded) |
| | Number of NID entries in connection list. | | | |

### *7.37.2. InPort2Mux (NID = 2Ah): ConLstEntry0*

| Reg | Byte 4 (Bits 31:24) | Byte 3 (Bits 23:16) | Byte 2 (Bits 15:8) | Byte 1 (Bits 7:0) |
|---|---|---|---|---|
| Set | | | | |
| Get | F0200h | | | |

| Field Name | Bits | R/W | Default | Reset |
|---|---|---|---|---|
| ConL3 | 31:24 | R | 11h | N/A (Hard-coded) |
| | Port H Pin widget (0x11)Port H Pin widget (0x11) | | | |
| ConL2 | 23:16 | R | 10h | N/A (Hard-coded) |
| | Port G Pin widget (0x10) | | | |
| ConL1 | 15:8 | R | 0Ch | N/A (Hard-coded) |
| | Port C Pin widget (0x0C) | | | |
| ConL0 | 7:0 | R | 0Bh | N/A (Hard-coded) |
| | Port B Pin widget (0x0B) | | | |

### *7.37.3. InPort2Mux (NID = 2Ah): ConSelectCtrl*

| Reg | Byte 4 (Bits 31:24) | Byte 3 (Bits 23:16) | Byte 2 (Bits 15:8) | Byte 1 (Bits 7:0) |
|---|---|---|---|---|
| Set | | | | 701h |
| Get | F0100h | | | |


©2014 TEMPO SEMICONDCUTOR, INC..

| Field Name | Bits | R/W | Default | Reset |
|---|---|---|---|---|
| Rsvd | 31:3 | R | 00000000h | N/A (Hard-coded) |
| | Reserved. | | | |
| Index | 2:0 | RW | 0h | POR - DAFG - ULR |
| | Connection select control index. | | | |

### *7.37.4. InPort2Mux (NID = 2Ah): PwrState*

| Reg | Byte 4 (Bits 31:24) | Byte 3 (Bits 23:16) | Byte 2 (Bits 15:8) | Byte 1 (Bits 7:0) |
|---|---|---|---|---|
| Set | | | | 705h |
| Get | F0500h | | | |

| Field Name | Bits | R/W | Default | Reset |
|---|---|---|---|---|
| Rsvd4 | 31:11 | R | 000000h | N/A (Hard-coded) |
| | Reserved. | | | |
| SettingsReset | 10 | R | 1h | POR - DAFG - ULR |
| | Indicates if any persistent settings in this Widget have been reset. Cleared by PwrState 'Get', or a 'Set' to any Verb in this Widget. | | | |
| Rsvd3 | 9 | R | 0h | N/A (Hard-coded) |
| | Reserved. | | | |
| Error | 8 | R | 0h | POR - DAFG - ULR |
| | Error indicator: 1 = cannot enter requested power state, 0 = no problem with requested power state. | | | |
| Rsvd2 | 7:6 | R | 0h | N/A (Hard-coded) |
| | Reserved. | | | |
| Act | 5:4 | R | 3h | POR - DAFG - LR |
| | Actual power state of this widget. | | | |


©2014 TEMPO SEMICONDCUTOR, INC..

| Field Name | Bits | R/W | Default | Reset |
|---|---|---|---|---|
| Rsvd1 | 3:2 | R | 0h | N/A (Hard-coded) |
| | Reserved. | | | |
| Set | 1:0 | RW | 0h | POR - DAFG - LR |
| | Current power state setting for this widget. | | | |


©2014 TEMPO SEMICONDCUTOR, INC..

## 7.38. InPort3Mux (NID = 2Bh): WCap

| Reg | Byte 4 (Bits 31:24) | Byte 3 (Bits 23:16) | Byte 2 (Bits 15:8) | Byte 1 (Bits 7:0) |
|---|---|---|---|---|
| Set | | | | |
| Get | F0009h | | | |

| Field Name | Bits | R/W | Default | Reset |
|---|---|---|---|---|
| Rsvd2 | 31:24 | R | 00h | N/A (Hard-coded) |
| | Reserved. | | | |
| Type | 23:20 | R | 3h | N/A (Hard-coded) |
| | Widget type:<br>0h = Out Converter<br>1h = In Converter<br>2h = Summing (Mixer)<br>3h = Selector (Mux)<br>4h = Pin Complex<br>5h = Power<br>6h = Volume Knob<br>7h = Beep Generator<br>8h-Eh = Reserved<br>Fh = Vendor Defined | | | |
| Delay | 19:16 | R | 0h | N/A (Hard-coded) |
| | Number of sample delays through widget. | | | |
| Rsvd1 | 15:12 | R | 0h | N/A (Hard-coded) |
| | Reserved. | | | |
| SwapCap | 11 | R | 0h | N/A (Hard-coded) |
| | Left/right swap support: 1 = yes, 0 = no. | | | |
| PwrCntrl | 10 | R | 1h | N/A (Hard-coded) |
| | Power state support: 1 = yes, 0 = no. | | | |
| DigitalStrm | 9 | R | 0h | N/A (Hard-coded) |
| | Digital stream support: 1 = yes (digital), 0 = no (analog). | | | |
| ConnList | 8 | R | 1h | N/A (Hard-coded) |
| | Connection list present: 1 = yes, 0 = no. | | | |


©2014 TEMPO SEMICONDCUTOR, INC..

| Field Name | Bits | R/W | Default | Reset |
|---|---|---|---|---|
| UnsolCap | 7 | R | 0h | N/A (Hard-coded) |
| | Unsolicited response support: 1 = yes, 0 = no. | | | |
| ProcWidget | 6 | R | 0h | N/A (Hard-coded) |
| | Processing state support: 1 = yes, 0 = no. | | | |
| Stripe | 5 | R | 0h | N/A (Hard-coded) |
| | Striping support: 1 = yes, 0 = no. | | | |
| FormatOvrd | 4 | R | 0h | N/A (Hard-coded) |
| | Stream format override: 1 = yes, 0 = no. | | | |
| AmpParamOvrd | 3 | R | 0h | N/A (Hard-coded) |
| | Amplifier capabilities override: 1 = yes, no. | | | |
| OutAmpPrsnt | 2 | R | 0h | N/A (Hard-coded) |
| | Output amp present: 1 = yes, 0 = no. | | | |
| InAmpPrsnt | 1 | R | 0h | N/A (Hard-coded) |
| | Input amp present: 1 = yes, 0 = no. | | | |
| Stereo | 0 | R | 1h | N/A (Hard-coded) |
| | Stereo stream support: 1 = yes (stereo), 0 = no (mono). | | | |

### *7.38.1. InPort3Mux (NID = 2Bh): ConLst*

| Reg | Byte 4 (Bits 31:24) | Byte 3 (Bits 23:16) | Byte 2 (Bits 15:8) | Byte 1 (Bits 7:0) |
|---|---|---|---|---|
| Set | | | | |
| Get | F000Eh | | | |

| Field Name | Bits | R/W | Default | Reset |
|---|---|---|---|---|
| Rsvd | 31:8 | R | 000000h | N/A (Hard-coded) |
| | Reserved. | | | |


©2014 TEMPO SEMICONDCUTOR, INC..

| Field Name | Bits | R/W | Default | Reset |
|---|---|---|---|---|
| LForm | 7 | R | 0h | N/A (Hard-coded) |
| | Connection list format: 1 = long-form (15-bit) NID entries, 0 = short-form (7-bit) NID entries. | | | |
| ConL | 6:0 | R | 04h | N/A (Hard-coded) |
| | Number of NID entries in connection list. | | | |

### *7.38.2. InPort3Mux (NID = 2Bh): ConLstEntry0*

| Reg | Byte 4 (Bits 31:24) | Byte 3 (Bits 23:16) | Byte 2 (Bits 15:8) | Byte 1 (Bits 7:0) |
|---|---|---|---|---|
| Set | | | | |
| Get | F0200h | | | |

| Field Name | Bits | R/W | Default | Reset |
|---|---|---|---|---|
| ConL3 | 31:24 | R | 18h | N/A (Hard-coded) |
| | DAC3 widget (0x18) | | | |
| ConL2 | 23:16 | R | 17h | N/A (Hard-coded) |
| | DAC2 widget (0x17) | | | |
| ConL1 | 15:8 | R | 16h | N/A (Hard-coded) |
| | DAC1 widget (0x16) | | | |
| ConL0 | 7:0 | R | 15h | N/A (Hard-coded) |
| | DAC0 widget (0x15 | | | |

### *7.38.3. InPort3Mux (NID = 2Bh): ConSelectCtrl*

| Reg | Byte 4 (Bits 31:24) | Byte 3 (Bits 23:16) | Byte 2 (Bits 15:8) | Byte 1 (Bits 7:0) |
|---|---|---|---|---|
| Set | | | | 701h |
| Get | F0100h | | | |


©2014 TEMPO SEMICONDCUTOR, INC..

| Field Name | Bits | R/W | Default | Reset |
|---|---|---|---|---|
| Rsvd | 31:3 | R | 00000000h | N/A (Hard-coded) |
| | Reserved. | | | |
| Index | 2:0 | RW | 0h | POR - DAFG - ULR |
| | Connection select control index. | | | |

### *7.38.4. InPort3Mux (NID = 2Bh): PwrState*

| Reg | Byte 4 (Bits 31:24) | Byte 3 (Bits 23:16) | Byte 2 (Bits 15:8) | Byte 1 (Bits 7:0) |
|---|---|---|---|---|
| Set | | | | 705h |
| Get | F0500h | | | |

| Field Name | Bits | R/W | Default | Reset |
|---|---|---|---|---|
| Rsvd4 | 31:11 | R | 000000h | N/A (Hard-coded) |
| | Reserved. | | | |
| SettingsReset | 10 | R | 1h | POR - DAFG - ULR |
| | Indicates if any persistent settings in this Widget have been reset. Cleared by PwrState 'Get', or a 'Set' to any Verb in this Widget. | | | |
| Rsvd3 | 9 | R | 0h | N/A (Hard-coded) |
| | Reserved. | | | |
| Error | 8 | R | 0h | POR - DAFG - ULR |
| | Error indicator: 1 = cannot enter requested power state, 0 = no problem with requested power state. | | | |
| Rsvd2 | 7:6 | R | 0h | N/A (Hard-coded) |
| | Reserved. | | | |
| Act | 5:4 | R | 3h | POR - DAFG - LR |
| | Actual power state of this widget. | | | |


©2014 TEMPO SEMICONDCUTOR, INC..

| Field Name | Bits | R/W | Default | Reset |
|---|---|---|---|---|
| Rsvd1 | 3:2 | R | 0h | N/A (Hard-coded) |
| | Reserved. | | | |
| Set | 1:0 | RW | 0h | POR - DAFG - LR |
| | Current power state setting for this widget. | | | |


©2014 TEMPO SEMICONDCUTOR, INC..

# 8. PINOUTS AND PACKAGING

## 8.1. 48QFP

### *8.1.1. 48 QFP Pin Assignment*

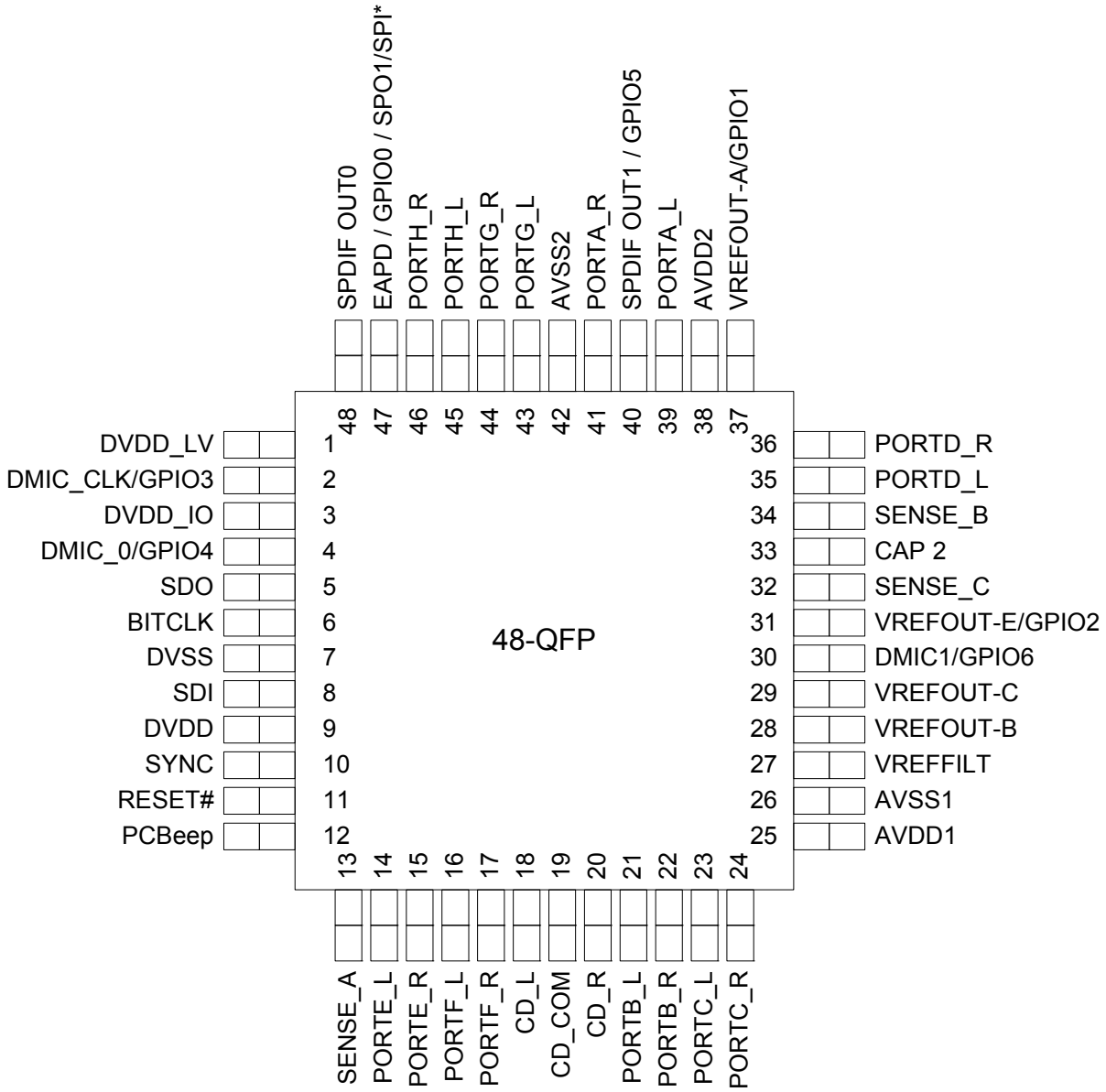


**Figure 14. Pin Assignment**

### *8.1.2. 48QFP Pin Table*

| Pin Name | Pin Function | I/O | Internal Pull-up Pull-down | 48 pin location |
|---|---|---|---|---|
| DVDD_LV | 1.5V Digital Core Regulator Filter Cap | O(Power) | None | 1 |

**Table 31. 48QFP Pin Table**


©2014 TEMPO SEMICONDCUTOR, INC..

| Pin Name | Pin Function | I/O | Internal Pull-up Pull-down | 48 pin location |
|---|---|---|---|---|
| DMIC_CLK/GPIO3 | Digital Mic Clock Output/GPIO3 | I/O(Digital) | 60K Pull-down | 2 |
| DVDD_IO | Reference Voltage (1.5V or 3.3V) | I(Power) | None | 3 |
| DMIC0/GPIO4 | Digital Mic 01 Input/GPIO4 | I/O(Digital) | 60K Pull-down | 4 |
| SDATA_OUT | HD Audio Serial Data output from controller | I(Digital) | None | 5 |
| BITCLK | HD Audio Bit Clock | I(Digital) | None | 6 |
| DVSS | Digital Ground | I(Digital) | None | 7 |
| SDATA_IN | HD Audio Serial Data Input to controller | I/O(Digital) | None | 8 |
| DVDD | Digital Vdd= 3.3V | I(Power) | None | 9 |
| SYNC | HD Audio Frame Sync | I(Digital) | None | 10 |
| RESET# | HD Audio Reset | I(Digital) | None | 11 |
| PCBeep | PC Beep Input | I(Analog) | None | 12 |
| SENSE_A | Jack insertion detection | I(Analog) | None | 13 |
| PORTE_L | Port E Left | I/O(Analog) | None | 14 |
| PORTE_R | Port E Right | I/O(Analog) | None | 15 |
| PORTF_L | Port F Left | I/O(Analog) | None | 16 |
| PORTF_R | Port F Right | I/O(Analog) | None | 17 |
| CD Left | CD Left | I(Analog) | None | 18 |
| CD Common | CD L/R return | I(Analog) | None | 19 |
| CD Right | CD Right | I(Analog) | None | 20 |
| PORTB_L (HP) | Port B Output Left | I/O(Analog) | None | 21 |
| PORTB_R (HP) | Port B Output Right | I/O(Analog) | None | 22 |
| PORTC_L | Port C Left | I/O(Analog) | None | 23 |
| PORTC_R | Port C Right | I/O(Analog) | None | 24 |
| AVDD1 | Analog Vdd=5.0V or 3.3V | I(Analog) | None | 25 |
| AVSS1 | Analog Ground | I(Analog) | None | 26 |
| VREFFILT | Analog Virtual Ground | O(Analog) | None | 27 |
| VREFOUT-B | Reference Voltage out drive (intended for mic bias) | O(Analog) | None | 28 |
| VREFOUT-C | Reference Voltage out drive (intended for mic bias) | O (Analog) | None | 29 |
| DMIC1 / GPIO6 | Digital Mic 23 Input/GPIO6 | I/O (Analog) | 60K Pull-down | 30 |
| VREFOUT-E / GPIO2 | Reference Voltage out drive (intended for mic bias) or General Purpose I/O | O(Analog) | None | 31 |
| SENSE_C | Jack insertion detection | I(Analog) | None | 32 |
| CAP 2 | ADC reference bypass capacitor | O(Analog) | None | 33 |
| SENSE_B | Jack insertion detection | I(Analog) | None | 34 |
| PORTD_L (HP) | Port D Output Left | I/O(Analog) | None | 35 |
| PORTD_R (HP) | Port D Output Right | I/O(Analog) | None | 36 |

**Table 31. 48QFP Pin Table**


©2014 TEMPO SEMICONDCUTOR, INC..

| Pin Name | Pin Function | I/O | Internal Pull-up Pull-down | 48 pin location |
|---|---|---|---|---|
| VREFOUT-A / GPIO1 | Reference Voltage out drive (intended for mic bias) or General Purpose I/O | O(Analog) | None | 37 |
| AVDD2 | Analog Supply for VREG | I(Power) | None | 38 |
| PORTA_L (HP) | Port A Output Left | I/O(Analog) | None | 39 |
| SPDIFOUT1/ GPIO5 | SPDIF Output, or General Purpose I/O | I/O(AVDD supply) | 60K Pull-down | 40 |
| PORTA_R (HP) | Port A Output Right | I/O(Analog) | None | 41 |
| AVSS | Analog Ground | I(Power) | None | 42 |
| PORTG_L | Port G Left | I/O(Analog) | None | 43 |
| PORTG_R | Port G Right | I/O(Analog) | None | 44 |
| PORTH_L | Port H Left | I/O(Analog) | None | 45 |
| PORTH_R | Port H Right | I/O(Analog) | None | 46 |
| EAPD/SPDIF_IN/GPIO0/SPDIF_OUT 1 | EAPD, SPDIF input, SPDIF output 1, GPIO0 | I/O(Digital) | 60K Pull-Up/Down | 47 |
| SPDIFOUT0 | SPDIF 0utput | O(Digital) | 60K pull-down | 48 |

**Table 31. 48QFP Pin Table**


©2014 TEMPO SEMICONDCUTOR, INC..

### *8.1.3. 48QFP Package Outline and Package Dimensions*

Package dimensions are kept current with JEDEC Publication No. 95

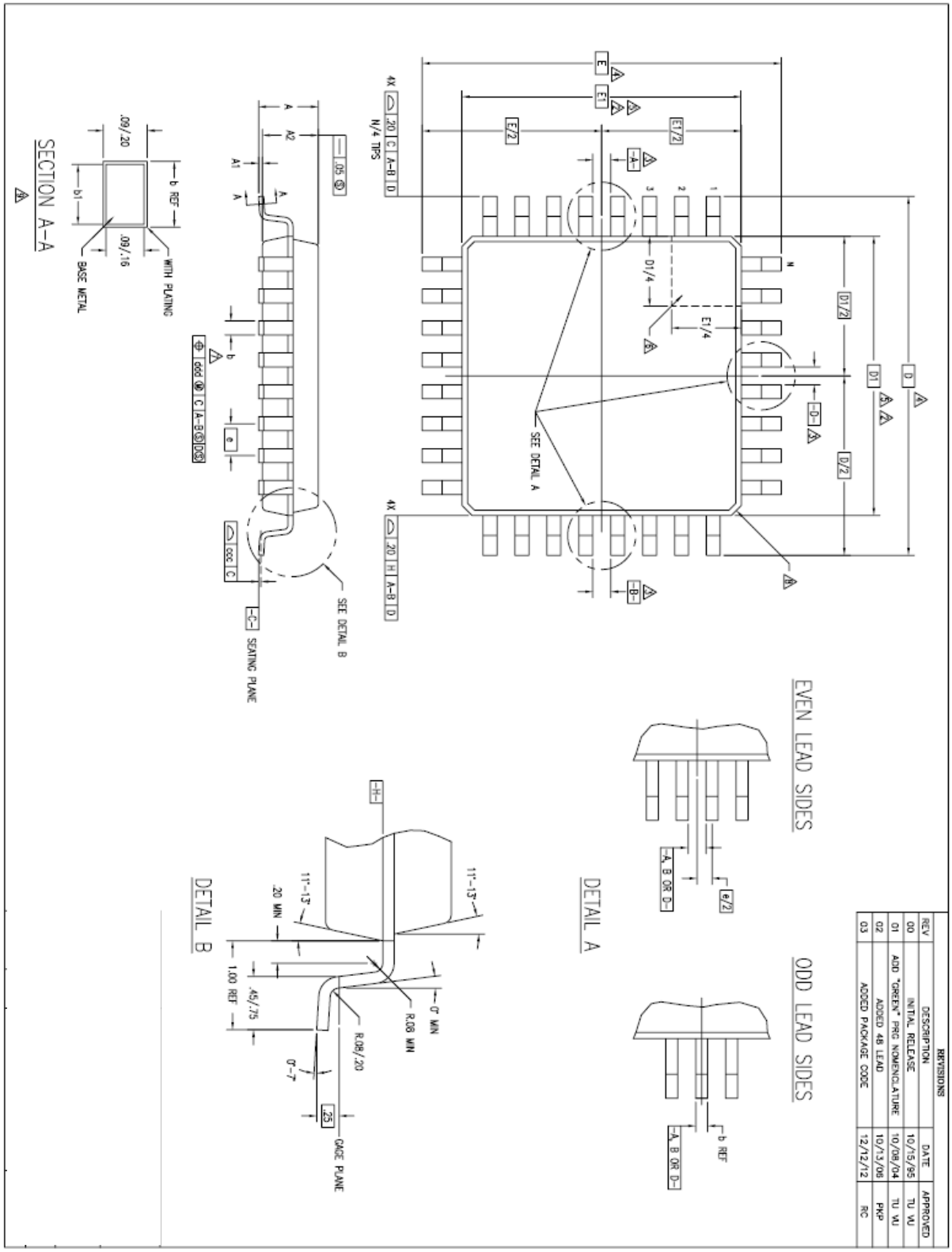


**Figure 15. 48QFP Package Diagram**


©2014 TEMPO SEMICONDCUTOR, INC..

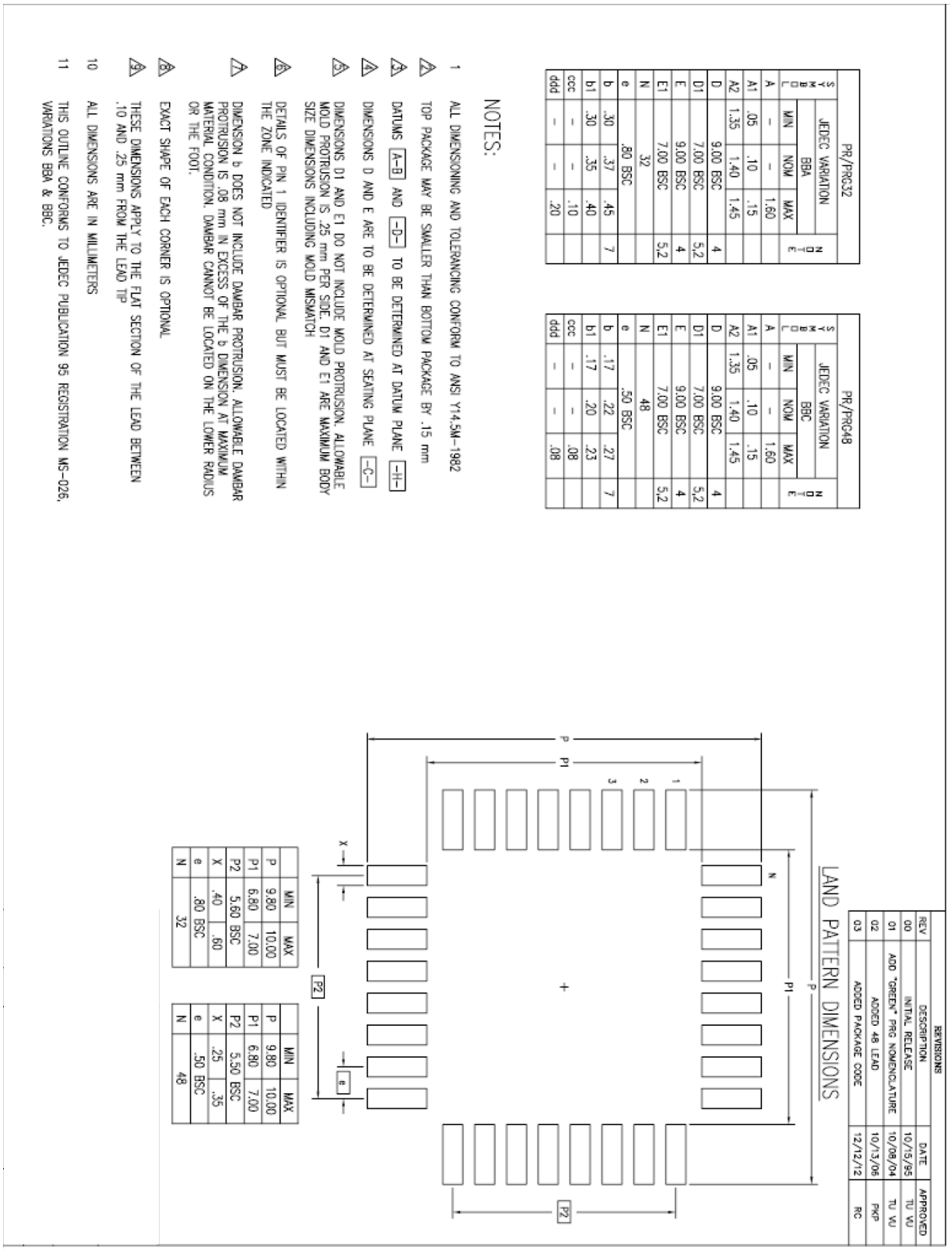


**Figure 16. 48QFP Package Diagram (cont)**


©2014 TEMPO SEMICONDCUTOR, INC..

## 8.2. 40QFN

### *8.2.1. 40QFN Pin Assignment*

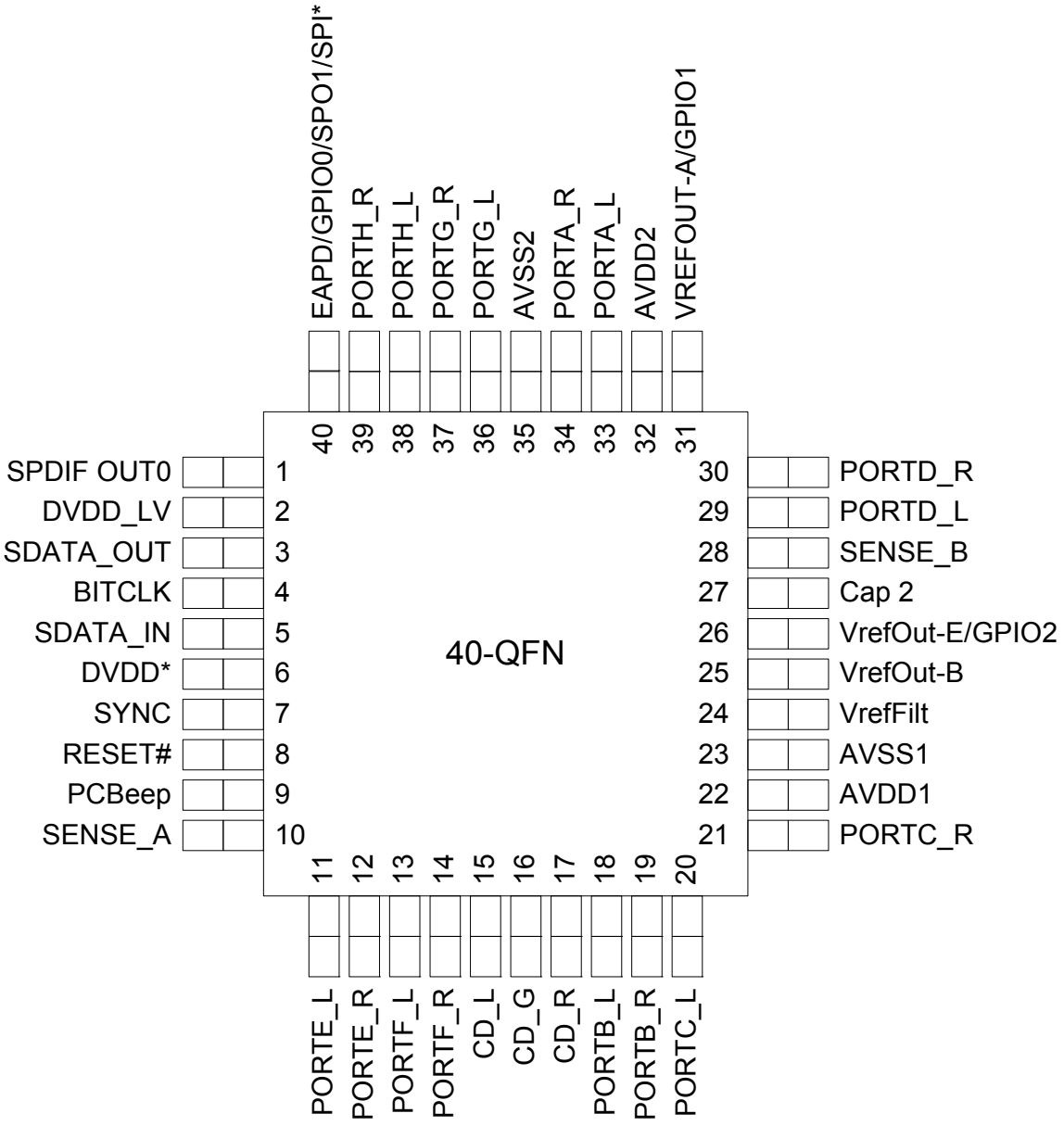


**Figure 17. Pin Assignment**

The DAP pad must be connected to DVSS on the 40-pin package.


©2014 TEMPO SEMICONDCUTOR, INC..

### *8.2.2. 40QFN Pin Table)*

| Pin Name | Pin Function | I/O | Internal Pull-up Pull-down | 40 pin location |
|---|---|---|---|---|
| SPDIFOUT0 | SPDIF 0utput | O(Digital) | 60K pull-down | 1 |
| DVDD_LV | 1.5V Digital Core Regulator Filter Cap | O(Power) | None | 2 |
| SDATA_OUT | HD Audio Serial Data output from controller | I(Digital) | None | 3 |
| BITCLK | HD Audio Bit Clock | I(Digital) | None | 4 |
| SDATA_IN | HD Audio Serial Data Input to controller | I/O(Digital) | None | 5 |
| DVDD | Digital Vdd= 3.3V | I(Power) | None | 6 |
| SYNC | HD Audio Frame Sync | I(Digital) | None | 7 |
| RESET# | HD Audio Reset | I(Digital) | None | 8 |
| PCBeep | PC Beep input | I(Analog) | None | 9 |
| SENSE_A | Jack insertion detection | I(Analog) | None | 10 |
| PORTE_L | Port E Left | I/O(Analog) | None | 11 |
| PORTE_R | Port E Right | I/O(Analog) | None | 12 |
| PORTF_L | Port F Left | I/O(Analog) | None | 13 |
| PORTF_R | Port F Right | I/O(Analog) | None | 14 |
| CD Left | CD Left | I(Analog) | None | 15 |
| CD Common | CD L/R return | I(Analog) | None | 16 |
| CD Right | CD Right | I(Analog) | None | 17 |
| PORTB_L (HP) | Port B Output Left | I/O(Analog) | None | 18 |
| PORTB_R (HP) | Port B Output Right | I/O(Analog) | None | 19 |
| PORTC_L | Port C Left | I/O(Analog) | None | 20 |
| PORTC_R | Port C Right | I/O(Analog) | None | 21 |
| AVDD1 | Analog Vdd=5.0V or 3.3V | I(Analog) | None | 22 |
| AVSS1 | Analog Ground | I(Analog) | None | 23 |
| VREFFILT | Analog Virtual Ground | O(Analog) | None | 24 |
| VREFOUT-B | Reference Voltage out drive (intended for mic bias) | O(Analog) | None | 25 |
| VREFOUT-E / GPIO2 | Reference Voltage out drive (intended for mic bias) or General Purpose I/O | O(Analog) | None | 26 |
| CAP 2 | ADC reference bypass capacitor | O(Analog) | None | 27 |
| SENSE_B | Jack insertion detection | I(Analog) | None | 28 |
| PORTD_L (HP) | Port D Output Left | I/O(Analog) | None | 29 |
| PORTD_R (HP) | Port D Output Right | I/O(Analog) | None | 30 |
| VREFOUT-A / GPIO1 | Reference Voltage out drive (intended for mic bias) or General Purpose I/O | O(Analog) | None | 31 |
| AVDD2 | Analog Supply for VREG | I(Power) | None | 32 |
| PORTA_L (HP) | Port A Output Left | I/O(Analog) | None | 33 |
| PORTA_R (HP) | Port A Output Right | I/O(Analog) | None | 34 |

**Table 32. 40QFN Pin Table**


©2014 TEMPO SEMICONDCUTOR, INC..

| Pin Name | Pin Function | I/O | Internal Pull-up Pull-down | 40 pin location |
|---|---|---|---|---|
| AVSS | Analog Ground | I(Power) | None | 35 |
| PORTG_L | Port G Left | I/O(Analog) | None | 36 |
| PORTG_R | Port G Right | I/O(Analog) | None | 37 |
| PORTH_L | Port H Left | I/O(Analog) | None | 38 |
| PORTH_R | Port H Right | I/O(Analog) | None | 39 |
| EAPD/SPDIF_IN/GPIO0/SPDIF_OUT1 | EAPD, SPDIF input, SPDIF output 1, GPIO0 | I/O(Digital) | 60K Pull-Up/Down | 40 |
| The DAP pad must be connected to DVSS on the 40-pin package | | | | |

**Table 32. 40QFN Pin Table**

### *8.2.3. 40QFN Package Outline and Package Dimensions*

Package dimensions are kept current with JEDEC Publication No. 95

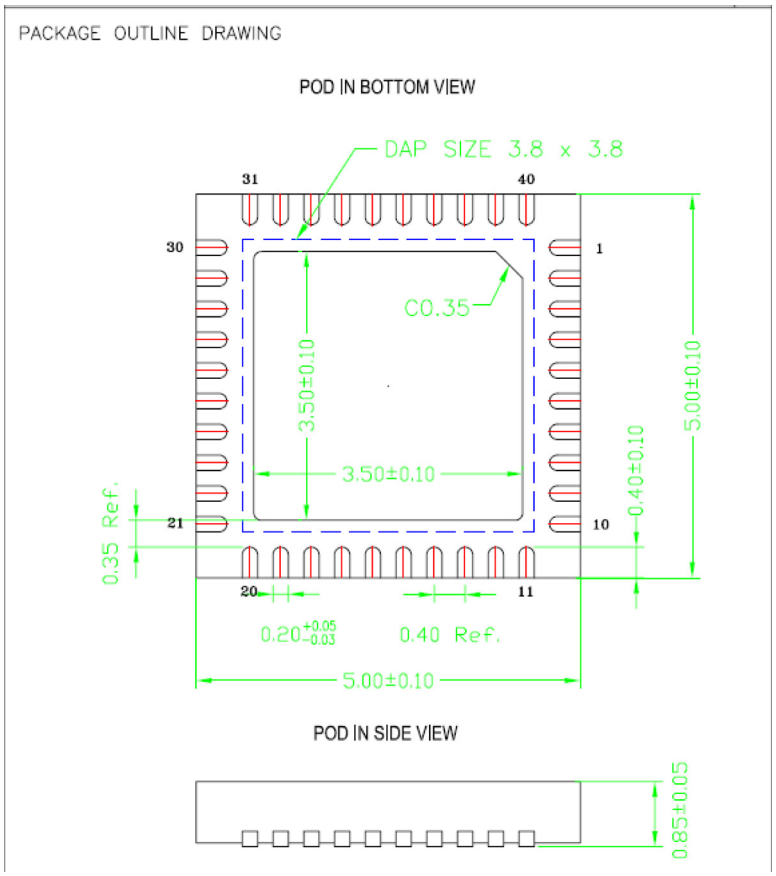


**Figure 18. 40QFN Package Diagram**


©2014 TEMPO SEMICONDCUTOR, INC..

## 8.3. 48QFP and 40QFN Standard Reflow Profile Data

Note: These devices can be hand soldered at 360 $^{o}$C for 3 to 5 seconds.

***FROM:*** IPC / JEDEC J-STD-020C "Moisture/Reflow Sensitivity Classification for Nonhermetic Solid State Surface Mount Devices" (www.jedec.org/download).

| Profile Feature | | Pb Free Assembly |
|---|---|---|
| Average Ramp-Up Rate ($Ts_{max}$ - Tp) | | 3 $^{o}$C / second max |
| Preheat: | Temperature Min ($Ts_{min}$)<br>Temperature Max ($Ts_{max}$)<br>Time ($ts_{min}$ - $ts_{max}$) | 150 $^{o}$C<br>200 $^{o}$C<br>60 - 180 seconds |
| Time maintained above: | Temperature ($T_L$)<br>Time ($t_L$) | 217 $^{o}$C<br>60 - 150 seconds |
| Peak / Classification Temperature (Tp) | | See "Package Classification Reflow Temperatures" |
| Time within 5 $^{o}$C of actual Peak Temperature (tp) | | 20 - 40 seconds |
| Ramp-Down rate | | 6 $^{o}$C / second max |
| Time 25 $^{o}$C to Peak Temperature | | 8 minutes max |
| Note: All temperatures refer to topside of the package, measured on the package body surface. | | |

**Table 33. Standard Reflow Profile**

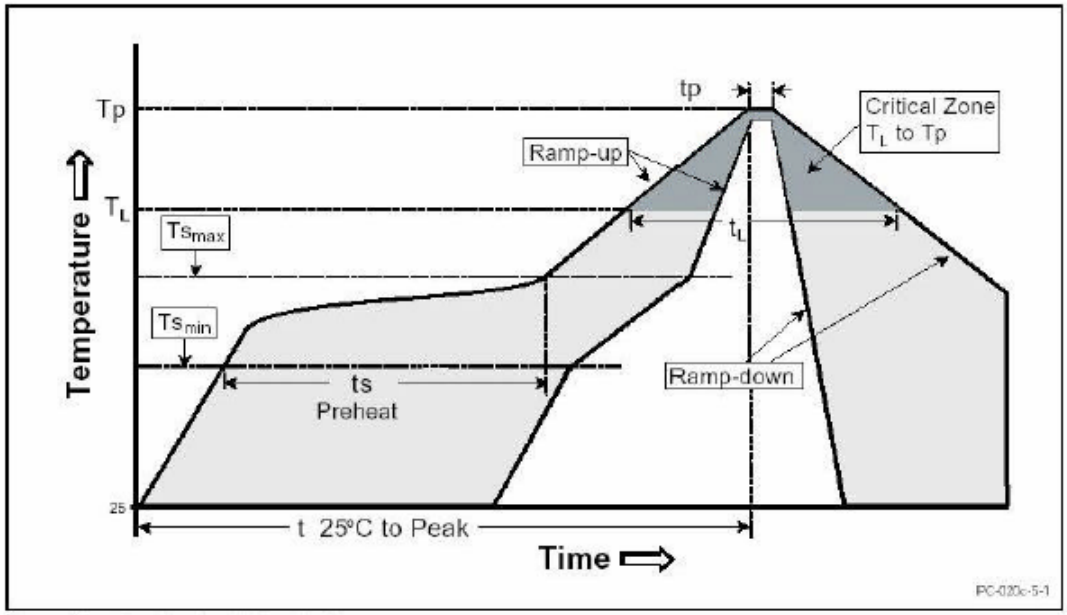



©2014 TEMPO SEMICONDCUTOR, INC..

# 9. DISCLAIMER

While the information presented herein has been checked for both accuracy and reliability, manufacturer assumes no responsibility for either its use or for the infringement of any patents or other rights of third parties, which would result from its use. No other circuits, patents, or licenses are implied. This product is intended for use in normal commercial applications. Any other applications, such as those requiring extended temperature range, high reliability, or other extraordinary environmental requirements, are not recommended without additional processing by manufacturer. Manufacturer reserves the right to change any circuitry or specifications without notice. Manufacturer does not authorize or warrant any product for use in life support devices or critical medical instruments.


©2014 TEMPO SEMICONDCUTOR, INC..

# 10. DOCUMENT REVISION HISTORY

| Revision | Date | Description of Change |
|---|---|---|
| 1.0 | September 2011 | Initial release |
| 1.1 | Septembert 2014 | Released in TSI format |


©2014 TEMPO SEMICONDCUTOR, INC..

www.temposemi.com
8627 N. MoPac Expwy Suite 130
Austin, Texas 78759

DISCLAIMER Tempo Semiconductor, Inc. (TSI) and its subsidiaries reserve the right to modify the products and/or specifications described herein at any time and at TSI's sole discretion. All information in this document, including descriptions of product features and performance, is subject to change without notice. Performance specifications and the operating parameters of the described products are determined in the independent state and are not guaranteed to perform the same way when installed in customer products. The information contained herein is provided without representation or warranty of any kind, whether express or implied, including, but not limited to, the suitability of TSI's products for any particular purpose, an implied warranty of merchantability, or non-infringement of the intellectual property rights of others. This document is presented only as a guide and does not convey any license under intellectual property rights of TSI or any third parties.

TSI's products are not intended for use in life support systems or similar devices where the failure or malfunction of an TSI product can be reasonably expected to significantly affect the health or safety of users. Anyone using an TSI product in such a manner does so at their own risk, absent an express, written agreement by TSI.

Tempo Semiconductor, TSI and the TSI logo are registered trademarks of TSI. Other trademarks and service marks used herein, including protected names, logos and designs, are the property of TSI or their respective third party owners.

Copyright 2014 All rights reserved.