74LVC373A

Octal D-type transparent latch with 5 V tolerant inputs/outputs; 3-state

Rev. 3 — 22 November 2012 Product data sheet

1. General description

The 74LVC373A consists of eight D-type transparent latches, featuring separate D-type inputs for each latch and 3-state true outputs for bus-oriented applications. A latch enable input (pin LE) and an output enable input (pin $\overline{OE}$) are common to all internal latches.

When pin LE is HIGH, data at the D-inputs (pins D0 to D7) enters the latches. In this condition, the latches are transparent, that is, a latch output will change each time its corresponding D-input changes. When pin LE is LOW, the latches store the information that was present at the D-inputs one set-up time preceding the HIGH-to-LOW transition of pin LE.

When pin $\overline{OE}$ is LOW, the contents of the eight latches are available at the Q-outputs (pins Q0 to Q7). When pin $\overline{OE}$ is HIGH, the outputs go to the high-impedance OFF-state. Operation of input pin $\overline{OE}$ does not affect the state of the latches.

Inputs can be driven from either 3.3 V or 5 V devices. When disabled, up to 5.5 V can be applied to the outputs. These features allow the use of these devices as translators in mixed 3.3 V and 5 V applications.

The 74LVC373A is functionally identical to the 74LVC573A, but has a different pin arrangement.

2. Features and benefits

- 5 V tolerant inputs/outputs for interfacing with 5 V logic
- Wide supply voltage range from 1.2 V to 3.6 V
- CMOS low power consumption
- Direct interface with TTL levels
- High-impedance outputs when V_{CC} = 0 V
- Complies with JEDEC standard:
  - JESD8-7A (1.65 V to 1.95 V)
  - JESD8-5A (2.3 V to 2.7 V)
  - JESD8-C/JESD36 (2.7 V to 3.6 V)
- ESD protection:
  - HBM JESD22-A114F exceeds 2000 V
  - MM JESD22-A115-B exceeds 200 V
  - CDM JESD22-C101E exceeds 1000 V
- Specified from –40 °C to +85 °C and –40 °C to +125 °C

3. Ordering information

Table 1. Ordering information

Type number	Package			
	Temperature range	Name	Description	Version
74LVC373AD	–40 °C to +125 °C	SO20	plastic small outline package; 20 leads; body width 7.5 mm	SOT163-1
74LVC373ADB	–40 °C to +125 °C	SSOP20	plastic shrink small outline package; 20 leads; body width 5.3 mm	SOT339-1
74LVC373APW	–40 °C to +125 °C	TSSOP20	plastic thin shrink small outline package; 20 leads; body width 4.4 mm	SOT360-1
74LVC373ABQ	–40 °C to +125 °C	DHVQFN20	plastic dual in-line compatible thermal enhanced very thin quad flat package; no leads; 20 terminals; body 2.5 × 4.5 × 0.85 mm	SOT764-1

4. Functional diagram

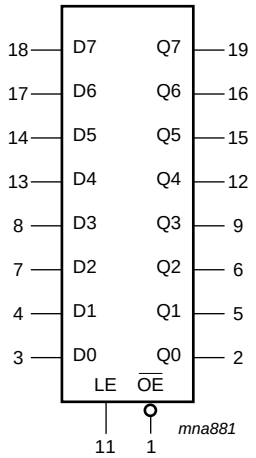

Fig 1. Logic symbol

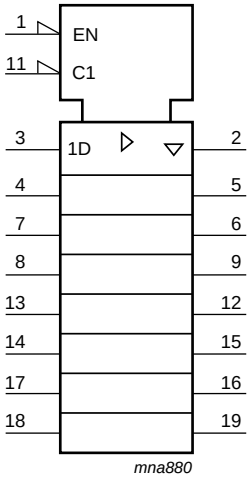

Fig 2. IEC logic symbol

All information provided in this document is subject to legal disclaimers.

© Nexperia B.V. 2017. All rights reserved

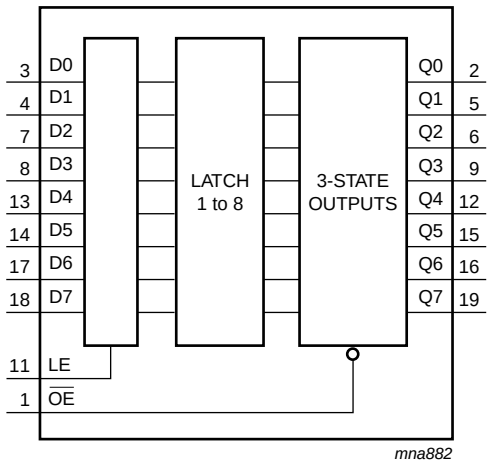

Fig 3. Functional diagram

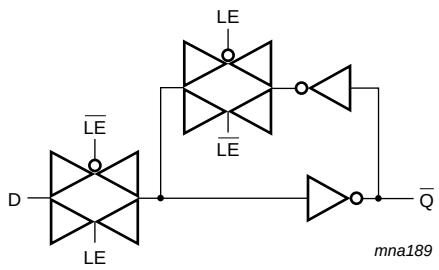

Fig 4. Logic diagram for one latch

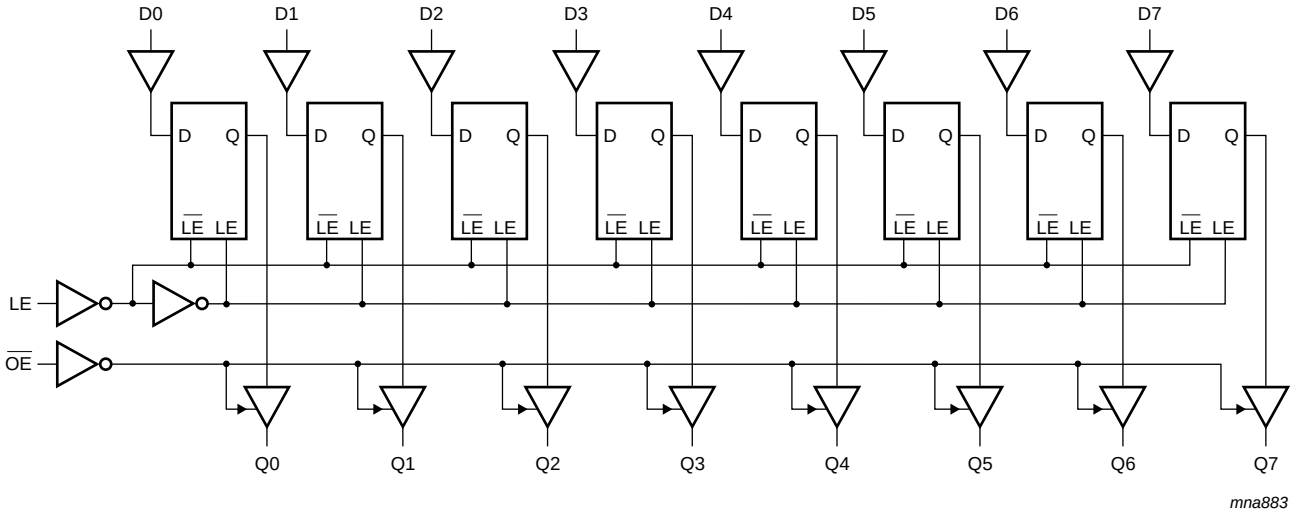

Fig 5. Logic diagram

All information provided in this document is subject to legal disclaimers.

© Nexperia B.V. 2017. All rights reserved

5. Pinning information

5.1 Pinning

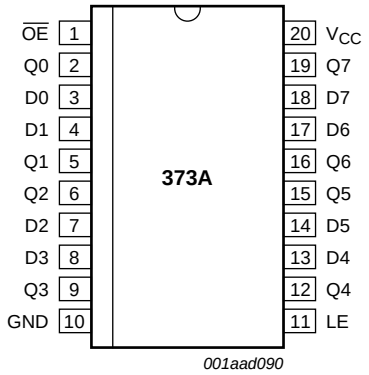

Fig 6. Pin configuration for SO20 and (T)SSOP20

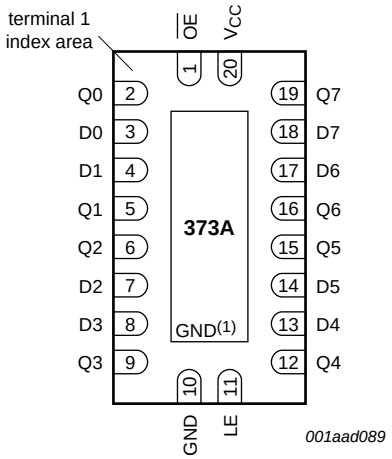

Transparent top view

(1) This is not a supply pin. The substrate is attached to this pad using conductive die attach material. There is no electrical or mechanical requirement to solder this pad. However, if it is soldered, the solder land should remain floating or be connected to GND.

Fig 7. Pin configuration for DHVQFN20

5.2 Pin description

Table 2. Pin description

Symbol	Pin	Description
$\overline{OE}$	1	output enable input (active LOW)
LE	11	latch enable input (active HIGH)
D[0:7]	3, 4, 7, 8, 13, 14, 17, 18	data input
Q[0:7]	2, 5, 6, 9, 12, 15, 16, 19	latch output
GND	10	ground (0 V)
V_{CC}	20	supply voltage

All information provided in this document is subject to legal disclaimers.

© Nexperia B.V. 2017. All rights reserved

6. Functional description

Table 3. Functional table[1]

Operating modes	Input			Internal latch	Output
	$\overline{OE}$	LE	Dn		Qn
Enable and read register (transparent mode)	L	H	L	L	L
	L	H	H	H	H
Latch and read register	L	L	l	L	L
	L	L	h	H	H
Latch register and disable outputs	H	L	l	L	Z
	H	L	h	H	Z

[1] H = HIGH voltage level
h = HIGH voltage level one set-up time prior to the HIGH-to-LOW LE transition
L = LOW voltage level
l = LOW voltage level one set-up time prior to the HIGH-to-LOW LE transition
Z = High-impedance OFF-state

7. Limiting values

Table 4. Limiting values

In accordance with the Absolute Maximum Rating System (IEC 60134). Voltages are referenced to GND (ground = 0 V).

Symbol	Parameter	Conditions		Min	Max	Unit
V_{CC}	supply voltage			–0.5	+6.5	V
I_{IK}	input clamping current	$V_I < 0$		–50	-	mA
V_I	input voltage		[1]	–0.5	+6.5	V
I_{OK}	output clamping current	$V_O > V_{CC}$ or $V_O < 0$		-	±50	mA
V_O	output voltage	HIGH or LOW-state	[2]	–0.5	V_{CC} + 0.5	V
		3-state	[2]	–0.5	+6.5	V
I_O	output current	V_O = 0 V to V_{CC}		-	±50	mA
I_{CC}	supply current			-	100	mA
I_{GND}	ground current			–100	-	mA
T_{stg}	storage temperature			–65	+150	°C
P_{tot}	total power dissipation	T_{amb} = –40 °C to +125 °C	[3]	-	500	mW

[1] The minimum input voltage ratings may be exceeded if the input current ratings are observed.

[2] The output voltage ratings may be exceeded if the output current ratings are observed.

[3] For SO20 packages: above 70 °C the value of P_{tot} derates linearly with 8 mW/K.
For (T)SSOP20 packages: above 60 °C the value of P_{tot} derates linearly with 5.5 mW/K.
For DHVQFN20 packages: above 60 °C the value of P_{tot} derates linearly with 4.5 mW/K.

All information provided in this document is subject to legal disclaimers.

© Nexperia B.V. 2017. All rights reserved

8. Recommended operating conditions

Table 5. Recommended operating conditions

Symbol	Parameter	Conditions	Min	Typ	Max	Unit
V_{CC}	supply voltage		1.65	-	3.6	V
		functional	1.2	-	-	V
V_I	input voltage		0	-	5.5	V
V_O	output voltage	HIGH or LOW-state	0	-	V_{CC}	V
		3-state	0	-	5.5	V
T_{amb}	ambient temperature	in free air	–40	-	+125	°C
$\Delta t/\Delta V$	input transition rise and fall rate	V_{CC} = 1.65 V to 2.7 V	0	-	20	ns/V
		V_{CC} = 2.7 V to 3.6 V	0	-	10	ns/V

9. Static characteristics

Table 6. Static characteristics

At recommended operating conditions. Voltages are referenced to GND (ground = 0 V).

Symbol	Parameter	Conditions	–40 °C to +85 °C			–40 °C to +125 °C		Unit
			Min	Typ[1]	Max	Min	Max	
V_{IH}	HIGH-level input voltage	V_{CC} = 1.2 V	1.08	-	-	1.08	-	V
		V_{CC} = 1.65 V to 1.95 V	0.65 × V_{CC}	-	-	0.65 × V_{CC}	-	V
		V_{CC} = 2.3 V to 2.7 V	1.7	-	-	1.7	-	V
		V_{CC} = 2.7 V to 3.6 V	2.0	-	-	2.0	-	V
V_{IL}	LOW-level input voltage	V_{CC} = 1.2 V	-	-	0.12	-	0.12	V
		V_{CC} = 1.65 V to 1.95 V	-	-	0.35 × V_{CC}	-	0.35 × V_{CC}	V
		V_{CC} = 2.3 V to 2.7 V	-	-	0.7	-	0.7	V
		V_{CC} = 2.7 V to 3.6 V	-	-	0.8	-	0.8	V
V_{OH}	HIGH-level output voltage	$V_I = V_{IH}$ or V_{IL}						
		I_O = –100 μA; V_{CC} = 1.65 V to 3.6 V	V_{CC} – 0.2	-	-	V_{CC} – 0.3	-	V
		I_O = –4 mA; V_{CC} = 1.65 V	1.2	-	-	1.05	-	V
		I_O = –8 mA; V_{CC} = 2.3 V	1.8	-	-	1.65	-	V
		I_O = –12 mA; V_{CC} = 2.7 V	2.2	-	-	2.05	-	V
		I_O = –18 mA; V_{CC} = 3.0 V	2.4	-	-	2.25	-	V
		I_O = –24 mA; V_{CC} = 3.0 V	2.2	-	-	2.0	-	V
V_{OL}	LOW-level output voltage	$V_I = V_{IH}$ or V_{IL}						
		I_O = 100 μA; V_{CC} = 1.65 V to 3.6 V	-	-	0.2	-	0.3	V
		I_O = 4 mA; V_{CC} = 1.65 V	-	-	0.45	-	0.65	V
		I_O = 8 mA; V_{CC} = 2.3 V	-	-	0.6	-	0.8	V
		I_O = 12 mA; V_{CC} = 2.7 V	-	-	0.4	-	0.6	V
		I_O = 24 mA; V_{CC} = 3.0 V	-	-	0.55	-	0.8	V
I_I	input leakage current	V_{CC} = 3.6 V; V_I = 5.5 V or GND	-	±0.1	±5	-	±20	μA

All information provided in this document is subject to legal disclaimers.

© Nexperia B.V. 2017. All rights reserved

Table 6. Static characteristics *...continued*

At recommended operating conditions. Voltages are referenced to GND (ground = 0 V).

Symbol	Parameter	Conditions	–40 °C to +85 °C			–40 °C to +125 °C		Unit
			Min	Typ[1]	Max	Min	Max	
I_{OZ}	OFF-state output current	$V_I = V_{IH}$ or V_{IL}; V_{CC} = 3.6 V; V_O = 5.5 V or GND;	-	±0.1	±5	-	±20	μA
I_{OFF}	power-off leakage supply	V_{CC} = 0 V; V_I or V_O = 5.5 V	-	±0.1	±10	-	±20	μA
I_{CC}	supply current	V_{CC} = 3.6 V; $V_I = V_{CC}$ or GND; I_O = 0 A	-	0.1	10	-	40	μA
ΔI_{CC}	additional supply current	per input pin; V_{CC} = 2.7 V to 3.6 V; $V_I = V_{CC} - 0.6$ V; I_O = 0 A	-	5	500	-	5000	μA
C_I	input capacitance	V_{CC} = 0 V to 3.6 V; V_I = GND to V_{CC}	-	5.0	-	-	-	pF

[1] All typical values are measured at V_{CC} = 3.3 V (unless stated otherwise) and T_{amb} = 25 °C.

10. Dynamic characteristics

Table 7. Dynamic characteristics

Voltages are referenced to GND (ground = 0 V). For test circuit see Figure 12.

Symbol	Parameter	Conditions		–40 °C to +85 °C			–40 °C to +125 °C		Unit
				Min	Typ[1]	Max	Min	Max	
t_{pd}	propagation delay	Dn to Qn; see Figure 8	[2]						
		V_{CC} = 1.2 V		-	14	-	-	-	ns
		V_{CC} = 1.65 V to 1.95 V		1.5	6.5	15.8	1.5	18.2	ns
		V_{CC} = 2.3 V to 2.7 V		1.0	3.4	8.2	1.0	9.4	ns
		V_{CC} = 2.7 V		1.5	3.4	7.8	1.5	10.0	ns
		V_{CC} = 3.0 V to 3.6 V		1.5	2.9	6.8	1.5	8.5	ns
		LE to Qn; see Figure 9	[2]						
		V_{CC} = 1.2 V		-	16	-	-	-	ns
		V_{CC} = 1.65 V to 1.95 V		2.2	7.3	16.8	2.2	19.3	ns
		V_{CC} = 2.3 V to 2.7 V		1.5	3.9	8.6	1.5	10.0	ns
		V_{CC} = 2.7 V		1.5	3.5	8.2	1.5	10.5	ns
		V_{CC} = 3.0 V to 3.6 V		1.5	3.3	7.2	1.5	9.0	ns
t_{en}	enable time	$\overline{OE}$ to Qn; see Figure 10	[2]						
		V_{CC} = 1.2 V		-	17	-	-	-	ns
		V_{CC} = 1.65 V to 1.95 V		1.5	6.8	17.6	1.5	20.3	ns
		V_{CC} = 2.3 V to 2.7 V		1.5	3.8	9.7	1.5	11.2	ns
		V_{CC} = 2.7 V		1.5	3.8	8.7	1.5	11.0	ns
		V_{CC} = 3.0 V to 3.6 V		1.5	3.1	7.7	1.5	10.0	ns

All information provided in this document is subject to legal disclaimers.

© Nexperia B.V. 2017. All rights reserved

Table 7. Dynamic characteristics *...continued*

Voltages are referenced to GND (ground = 0 V). For test circuit see Figure 12.

Symbol	Parameter	Conditions		–40 °C to +85 °C			–40 °C to +125 °C		Unit
				Min	Typ[1]	Max	Min	Max	
t_{dis}	disable time	$\overline{OE}$ to Qn; see Figure 10	[2]						
		V_{CC} = 1.2 V		-	8.0	-	-	-	ns
		V_{CC} = 1.65 V to 1.95 V		2.3	4.3	10.3	2.3	11.9	ns
		V_{CC} = 2.3 V to 2.7 V		1.0	2.4	5.8	1.0	6.8	ns
		V_{CC} = 2.7 V		1.5	3.2	7.1	1.5	9.0	ns
		V_{CC} = 3.0 V to 3.6 V		1.5	3.0	6.1	1.5	8.0	ns
t_W	pulse width	LE HIGH; see Figure 9							
		V_{CC} = 1.65 V to 1.95 V		5.0	-	-	5.0	-	ns
		V_{CC} = 2.3 V to 2.7 V		4.0	-	-	4.0	-	ns
		V_{CC} = 2.7 V		3.0	-	-	3.0	-	ns
		V_{CC} = 3.0 V to 3.6 V		3.0	1.5	-	3.0	-	ns
t_{su}	set-up time	Dn to LE; see Figure 11							
		V_{CC} = 1.65 V to 1.95 V		4.0	-	-	4.0	-	ns
		V_{CC} = 2.3 V to 2.7 V		3.0	-	-	3.0	-	ns
		V_{CC} = 2.7 V		2.0	-	-	2.0	-	ns
		V_{CC} = 3.0 V to 3.6 V		2.0	0.0	-	2.0	-	ns
t_h	hold time	Dn to LE; see Figure 11							
		V_{CC} = 1.65 V to 1.95 V		3.0	-	-	3.0	-	ns
		V_{CC} = 2.3 V to 2.7 V		2.0	-	-	2.0	-	ns
		V_{CC} = 2.7 V		1.5	-	-	1.5	-	ns
		V_{CC} = 3.0 V to 3.6 V		1.5	0.3	-	1.5	-	ns
$t_{sk(0)}$	output skew time	V_{CC} = 3.0 V to 3.6 V	[3]	-	-	1.0	-	1.5	ns
C_{PD}	power dissipation capacitance	per latch; V_I = GND to V_{CC}	[4]						
		V_{CC} = 1.65 V to 1.95 V		-	16.6	-		-	pF
		V_{CC} = 2.3 V to 2.7 V		-	19.2	-		-	pF
		V_{CC} = 3.0 V to 3.6 V		-	21.6	-		-	pF

[1] Typical values are measured at T_{amb} = 25 °C and V_{CC} = 1.2 V, 1.8 V, 2.5 V, 2.7 V and 3.3 V respectively.

[2] t_{pd} is the same as t_{PLH} and t_{PHL}.
t_{en} is the same as t_{PZL} and t_{PZH}.
t_{dis} is the same as t_{PLZ} and t_{PHZ}.

[3] Skew between any two outputs of the same package switching in the same direction. This parameter is guaranteed by design.

[4] C_{PD} is used to determine the dynamic power dissipation (P_D in μW).
$P_D = C_{PD} \times V_{CC}^2 \times f_i \times N + \Sigma(C_L \times V_{CC}^2 \times f_o)$ where:
f_i = input frequency in MHz; f_o = output frequency in MHz
C_L = output load capacitance in pF
V_{CC} = supply voltage in Volts
N = number of inputs switching
$\Sigma(C_L \times V_{CC}^2 \times f_o)$ = sum of the outputs

All information provided in this document is subject to legal disclaimers.

© Nexperia B.V. 2017. All rights reserved

11. AC waveforms

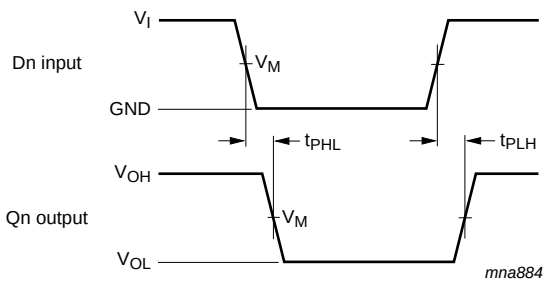

Measurement points are given in Table 8.

V_{OL} and V_{OH} are typical output voltage levels that occur with the output load.

Fig 8. Input (Dn) to output (Qn) propagation delays

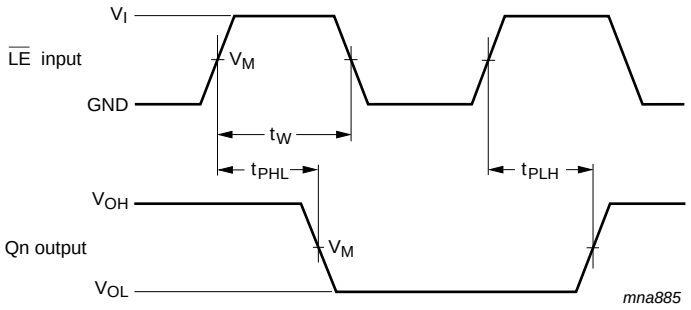

Measurement points are given in Table 8.

V_{OL} and V_{OH} are typical output voltage levels that occur with the output load.

Fig 9. Latch Enable input (LE) pulse width, the latch enable input to output (Qn) propagation delays

All information provided in this document is subject to legal disclaimers.

© Nexperia B.V. 2017. All rights reserved

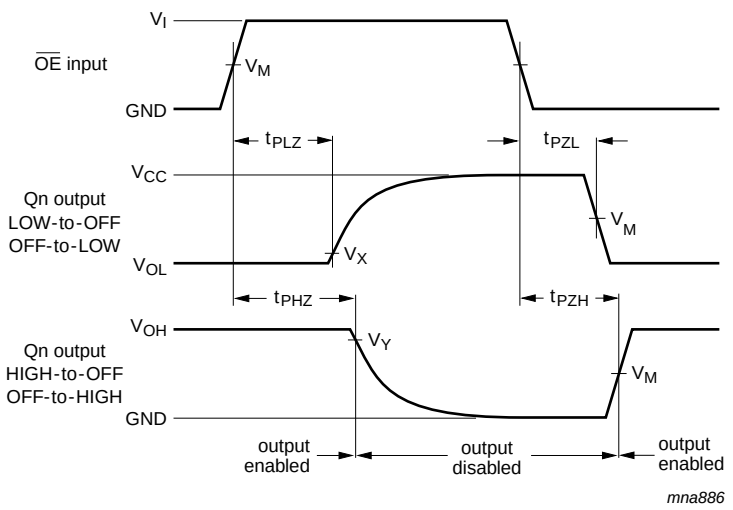

Measurement points are given in Table 8.

V_{OL} and V_{OH} are typical output voltage levels that occur with the output load.

Fig 10. 3-state enable and disable times

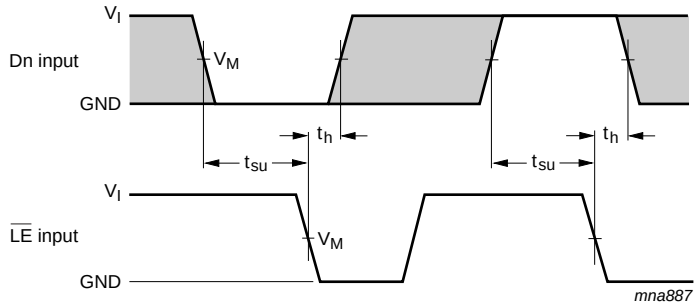

Measurement points are given in Table 8.

The shaded areas indicate when the input is permitted to change for predictable output performance.

Fig 11. Data set-up and hold times for the Dn input to the LE input

Table 8. Measurement points

Supply voltage	Input		Output		
V_{CC}	V_I	V_M	V_M	V_X	V_Y
1.2 V	V_{CC}	$0.5 \times V_{CC}$	$0.5 \times V_{CC}$	V_{OL} + 0.15 V	V_{OH} − 0.15 V
1.65 V to 1.95 V	V_{CC}	$0.5 \times V_{CC}$	$0.5 \times V_{CC}$	V_{OL} + 0.15 V	V_{OH} − 0.15 V
2.3 V to 2.7 V	V_{CC}	$0.5 \times V_{CC}$	$0.5 \times V_{CC}$	V_{OL} + 0.15 V	V_{OH} − 0.15 V
2.7 V	2.7 V	1.5 V	1.5 V	V_{OL} + 0.3 V	V_{OH} − 0.3 V
3.0 V to 3.6 V	2.7 V	1.5 V	1.5 V	V_{OL} + 0.3 V	V_{OH} − 0.3 V

All information provided in this document is subject to legal disclaimers.

© Nexperia B.V. 2017. All rights reserved

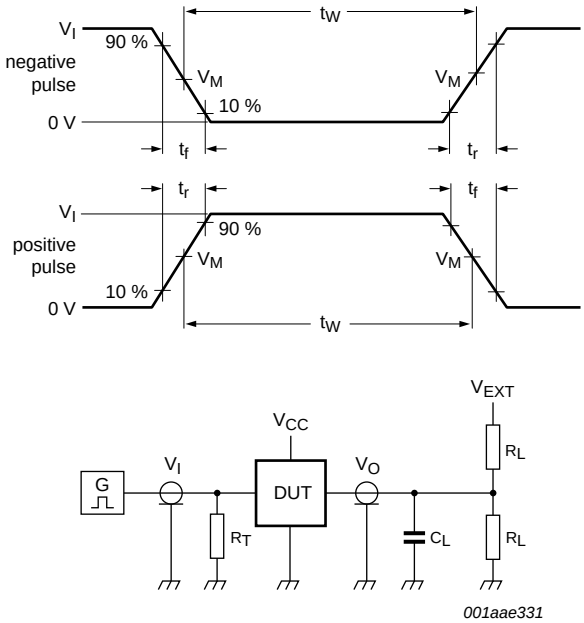

Test data is given in Table 9.

Definitions for test circuit:

R_L = Load resistance.

C_L = Load capacitance including jig and probe capacitance.

R_T = Termination resistance should be equal to output impedance Z_o of the pulse generator.

V_{EXT} = External voltage for measuring switching times.

Fig 12. Test circuit for measuring switching times

Table 9. Test data

Supply voltage	Input		Load		V_{EXT}		
	V_I	t_r, t_f	C_L	R_L	t_{PLH}, t_{PHL}	t_{PLZ}, t_{PZL}	t_{PHZ}, t_{PZH}
1.2 V	V_{CC}	≤ 2 ns	30 pF	1 kΩ	open	$2 \times V_{CC}$	GND
1.65 V to 1.95 V	V_{CC}	≤ 2 ns	30 pF	1 kΩ	open	$2 \times V_{CC}$	GND
2.3 V to 2.7 V	V_{CC}	≤ 2 ns	30 pF	500 Ω	open	$2 \times V_{CC}$	GND
2.7 V	2.7 V	≤ 2.5 ns	50 pF	500 Ω	open	$2 \times V_{CC}$	GND
3.0 V to 3.6 V	2.7 V	≤ 2.5 ns	50 pF	500 Ω	open	$2 \times V_{CC}$	GND

All information provided in this document is subject to legal disclaimers.

© Nexperia B.V. 2017. All rights reserved

12. Package outline

SO20: plastic small outline package; 20 leads; body width 7.5 mm **SOT163-1**

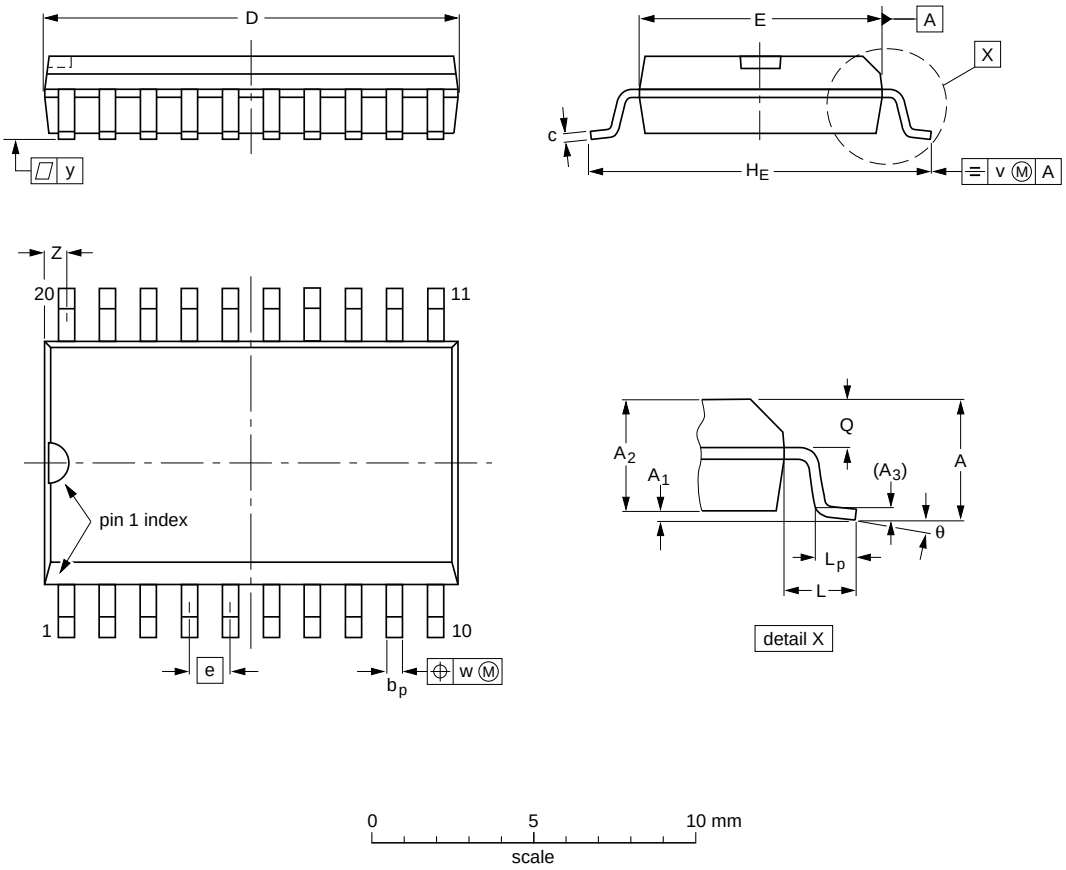

DIMENSIONS (inch dimensions are derived from the original mm dimensions)

UNIT	A max.	A_1	A_2	A_3	b_p	c	D (1)	E (1)	e	H_E	L	L_p	Q	v	w	y	Z (1)	θ
mm	2.65	0.3 0.1	2.45 2.25	0.25	0.49 0.36	0.32 0.23	13.0 12.6	7.6 7.4	1.27	10.65 10.00	1.4	1.1 0.4	1.1 1.0	0.25	0.25	0.1	0.9 0.4	8° 0°
inches	0.1	0.012 0.004	0.096 0.089	0.01	0.019 0.014	0.013 0.009	0.51 0.49	0.30 0.29	0.05	0.419 0.394	0.055	0.043 0.016	0.043 0.039	0.01	0.01	0.004	0.035 0.016	

Note

1. Plastic or metal protrusions of 0.15 mm (0.006 inch) maximum per side are not included.

OUTLINE VERSION	REFERENCES				EUROPEAN PROJECTION	ISSUE DATE
	IEC	JEDEC	JEITA			
SOT163-1	075E04	MS-013				~~99-12-27~~ 03-02-19

Fig 13. Package outline SOT163-1 (SO20)

All information provided in this document is subject to legal disclaimers.

© Nexperia B.V. 2017. All rights reserved

SSOP20: plastic shrink small outline package; 20 leads; body width 5.3 mm **SOT339-1**

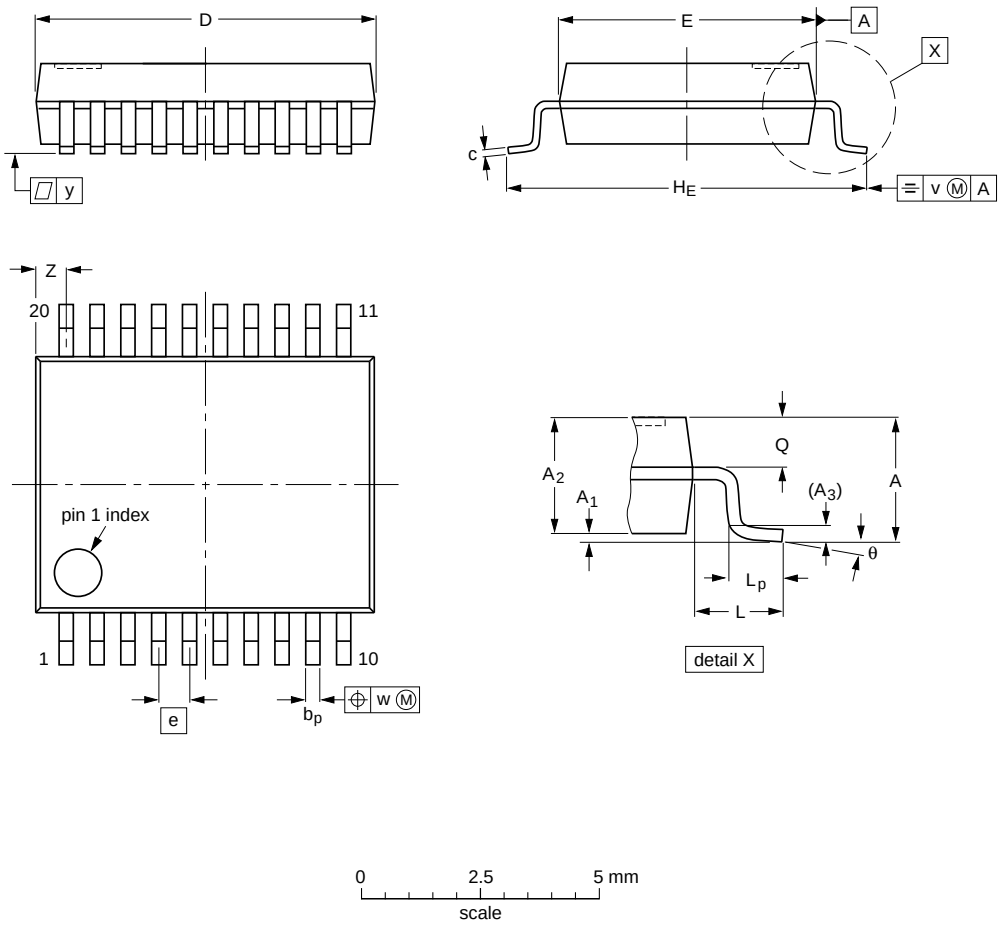

DIMENSIONS (mm are the original dimensions)

UNIT	A max.	A_1	A_2	A_3	b_p	c	D(1)	E(1)	e	H_E	L	L_p	Q	v	w	y	Z(1)	θ
mm	2	0.21 0.05	1.80 1.65	0.25	0.38 0.25	0.20 0.09	7.4 7.0	5.4 5.2	0.65	7.9 7.6	1.25	1.03 0.63	0.9 0.7	0.2	0.13	0.1	0.9 0.5	8° 0°

Note

1. Plastic or metal protrusions of 0.2 mm maximum per side are not included.

OUTLINE VERSION	REFERENCES				EUROPEAN PROJECTION	ISSUE DATE
	IEC	JEDEC	JEITA			
SOT339-1		MO-150				~~99-12-27~~ 03-02-19

Fig 14. Package outline SOT339-1 (SSOP20)

All information provided in this document is subject to legal disclaimers.

© Nexperia B.V. 2017. All rights reserved

TSSOP20: plastic thin shrink small outline package; 20 leads; body width 4.4 mm **SOT360-1**

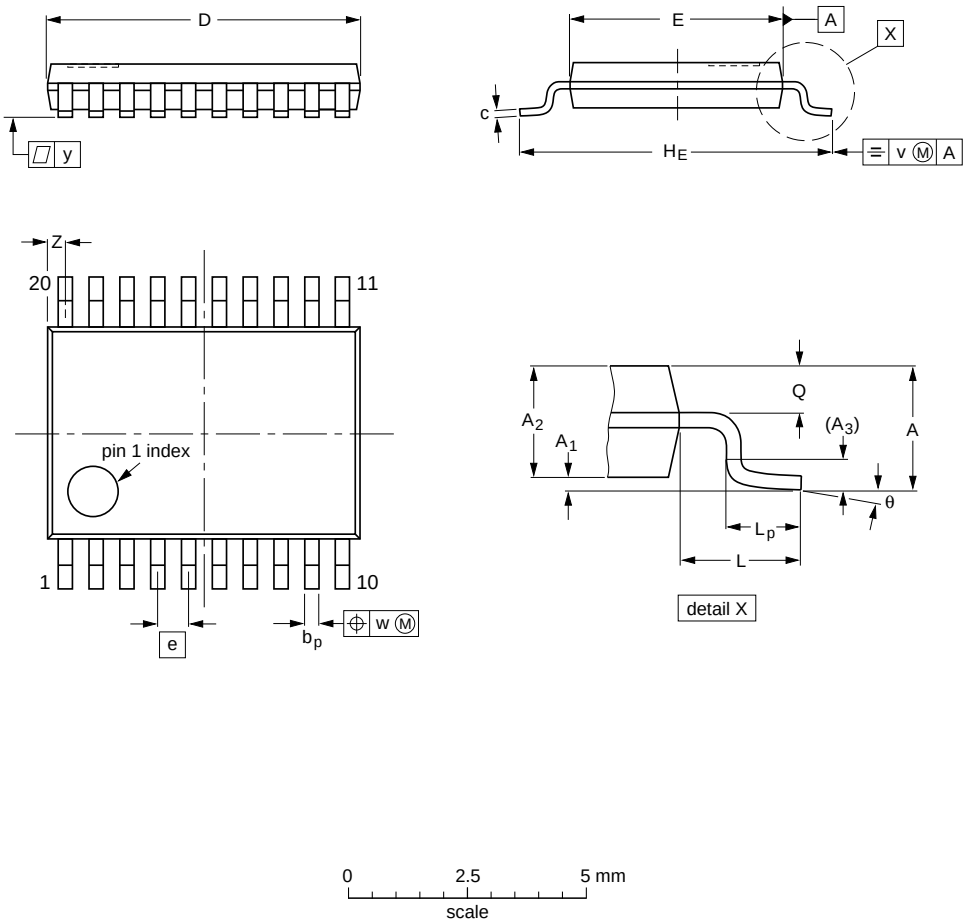

DIMENSIONS (mm are the original dimensions)

UNIT	A max.	A_1	A_2	A_3	b_p	c	D (1)	E (2)	e	H_E	L	L_p	Q	v	w	y	Z (1)	θ
mm	1.1	0.15 0.05	0.95 0.80	0.25	0.30 0.19	0.2 0.1	6.6 6.4	4.5 4.3	0.65	6.6 6.2	1	0.75 0.50	0.4 0.3	0.2	0.13	0.1	0.5 0.2	8° 0°

Notes

1. Plastic or metal protrusions of 0.15 mm maximum per side are not included.
2. Plastic interlead protrusions of 0.25 mm maximum per side are not included.

OUTLINE VERSION	REFERENCES				EUROPEAN PROJECTION	ISSUE DATE
	IEC	JEDEC	JEITA			
SOT360-1		MO-153				~~99-12-27~~ 03-02-19

Fig 15. Package outline SOT360-1 (TSSOP20)

All information provided in this document is subject to legal disclaimers.

© Nexperia B.V. 2017. All rights reserved

DHVQFN20: plastic dual in-line compatible thermal enhanced very thin quad flat package; no leads; 20 terminals; body 2.5 x 4.5 x 0.85 mm **SOT764-1**

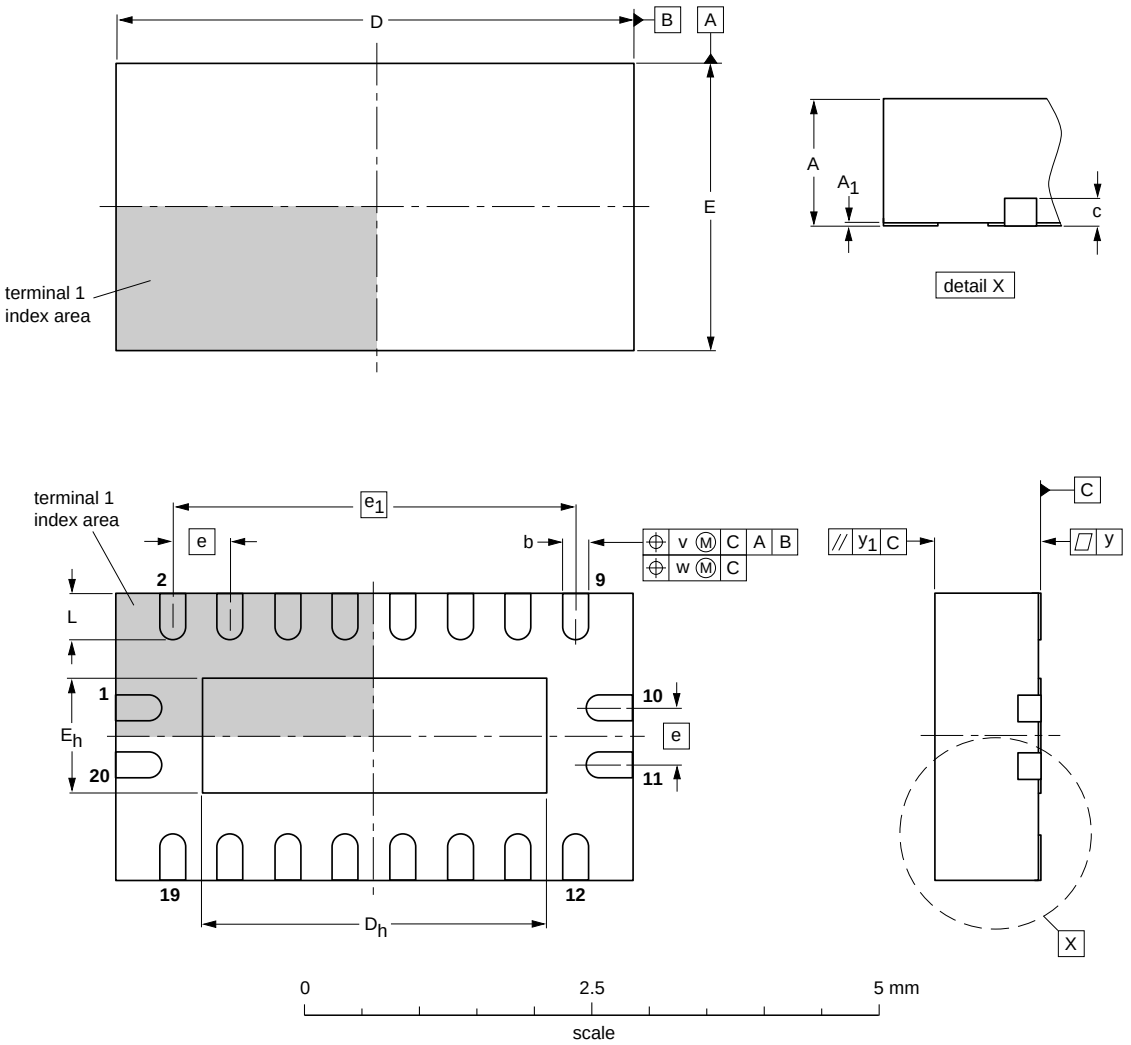

DIMENSIONS (mm are the original dimensions)

UNIT	A(1) max.	A_1	b	c	D(1)	D_h	E(1)	E_h	e	e_1	L	v	w	y	y_1
mm	1	0.05 0.00	0.30 0.18	0.2	4.6 4.4	3.15 2.85	2.6 2.4	1.15 0.85	0.5	3.5	0.5 0.3	0.1	0.05	0.05	0.1

Note

1. Plastic or metal protrusions of 0.075 mm maximum per side are not included.

OUTLINE VERSION	REFERENCES				EUROPEAN PROJECTION	ISSUE DATE
	IEC	JEDEC	JEITA			
SOT764-1	- - -	MO-241	- - -			~~02-10-17~~ 03-01-27

Fig 16. Package outline SOT764-1 (DHVQFN20)

All information provided in this document is subject to legal disclaimers.

© Nexperia B.V. 2017. All rights reserved

13. Abbreviations

Table 10. Abbreviations

Acronym	Description
CDM	Charged Device Model
DUT	Device Under Test
ESD	ElectroStatic Discharge
HBM	Human Body Model
MM	Machine Model
TTL	Transistor-Transistor Logic

14. Revision history

Table 11. Revision history

Document ID	Release date	Data sheet status	Change notice	Supersedes
74LVC373A v.3	20121122	Product data sheet	-	74LVC373A v.2
Modifications:	• The format of this data sheet has been redesigned to comply with the new identity guidelines of NXP Semiconductors. • Legal texts have been adapted to the new company name where appropriate. • Table 4, Table 5, Table 6, Table 7, Table 8 and Table 9: values added for lower voltage ranges.			
74LVC373A v.2	20030519	Product specification	-	74LVC373A v.1
74LVC373A v.1	19980729	Product specification	-	-

All information provided in this document is subject to legal disclaimers.

© Nexperia B.V. 2017. All rights reserved

15. Legal information

15.1 Data sheet status

Document status[1][2]	Product status[3]	Definition
Objective [short] data sheet	Development	This document contains data from the objective specification for product development.
Preliminary [short] data sheet	Qualification	This document contains data from the preliminary specification.
Product [short] data sheet	Production	This document contains the product specification.

[1] Please consult the most recently issued document before initiating or completing a design.

[2] The term 'short data sheet' is explained in section "Definitions".

[3] The product status of device(s) described in this document may have changed since this document was published and may differ in case of multiple devices. The latest product status information is available on the Internet at URL http://www.nexperia.com.

15.2 Definitions

Draft — The document is a draft version only. The content is still under internal review and subject to formal approval, which may result in modifications or additions. Nexperia does not give any representations or warranties as to the accuracy or completeness of information included herein and shall have no liability for the consequences of use of such information.

Short data sheet — A short data sheet is an extract from a full data sheet with the same product type number(s) and title. A short data sheet is intended for quick reference only and should not be relied upon to contain detailed and full information. For detailed and full information see the relevant full data sheet, which is available on request via the local Nexperia sales office. In case of any inconsistency or conflict with the short data sheet, the full data sheet shall prevail.

Product specification — The information and data provided in a Product data sheet shall define the specification of the product as agreed between Nexperia and its customer, unless Nexperia and customer have explicitly agreed otherwise in writing. In no event however, shall an agreement be valid in which the Nexperia product is deemed to offer functions and qualities beyond those described in the Product data sheet.

15.3 Disclaimers

Limited warranty and liability — Information in this document is believed to be accurate and reliable. However, Nexperia does not give any representations or warranties, expressed or implied, as to the accuracy or completeness of such information and shall have no liability for the consequences of use of such information. Nexperia takes no responsibility for the content in this document if provided by an information source outside of Nexperia.

In no event shall Nexperia be liable for any indirect, incidental, punitive, special or consequential damages (including - without limitation - lost profits, lost savings, business interruption, costs related to the removal or replacement of any products or rework charges) whether or not such damages are based on tort (including negligence), warranty, breach of contract or any other legal theory.

Notwithstanding any damages that customer might incur for any reason whatsoever, Nexperia's aggregate and cumulative liability towards customer for the products described herein shall be limited in accordance with the *Terms and conditions of commercial sale* of Nexperia.

Right to make changes — Nexperia reserves the right to make changes to information published in this document, including without limitation specifications and product descriptions, at any time and without notice. This document supersedes and replaces all information supplied prior to the publication hereof.

Suitability for use — Nexperia products are not designed, authorized or warranted to be suitable for use in life support, life-critical or safety-critical systems or equipment, nor in applications where failure or malfunction of a Nexperia product can reasonably be expected to result in personal injury, death or severe property or environmental damage. Nexperia and its suppliers accept no liability for inclusion and/or use of Nexperia products in such equipment or applications and therefore such inclusion and/or use is at the customer's own risk.

Applications — Applications that are described herein for any of these products are for illustrative purposes only. Nexperia makes no representation or warranty that such applications will be suitable for the specified use without further testing or modification.

Customers are responsible for the design and operation of their applications and products using Nexperia products, and Nexperia accepts no liability for any assistance with applications or customer product design. It is customer's sole responsibility to determine whether the Nexperia product is suitable and fit for the customer's applications and products planned, as well as for the planned application and use of customer's third party customer(s). Customers should provide appropriate design and operating safeguards to minimize the risks associated with their applications and products.

Nexperia does not accept any liability related to any default, damage, costs or problem which is based on any weakness or default in the customer's applications or products, or the application or use by customer's third party customer(s). Customer is responsible for doing all necessary testing for the customer's applications and products using Nexperia products in order to avoid a default of the applications and the products or of the application or use by customer's third party customer(s). Nexperia does not accept any liability in this respect.

Limiting values — Stress above one or more limiting values (as defined in the Absolute Maximum Ratings System of IEC 60134) will cause permanent damage to the device. Limiting values are stress ratings only and (proper) operation of the device at these or any other conditions above those given in the Recommended operating conditions section (if present) or the Characteristics sections of this document is not warranted. Constant or repeated exposure to limiting values will permanently and irreversibly affect the quality and reliability of the device.

Terms and conditions of commercial sale — Nexperia products are sold subject to the general terms and conditions of commercial sale, as published at http://www.nexperia.com/profile/terms, unless otherwise agreed in a valid written individual agreement. In case an individual agreement is concluded only the terms and conditions of the respective agreement shall apply. Nexperia hereby expressly objects to applying the customer's general terms and conditions with regard to the purchase of Nexperia products by customer.

No offer to sell or license — Nothing in this document may be interpreted or construed as an offer to sell products that is open for acceptance or the grant, conveyance or implication of any license under any copyrights, patents or other industrial or intellectual property rights.

All information provided in this document is subject to legal disclaimers.

© Nexperia B.V. 2017. All rights reserved

Export control — This document as well as the item(s) described herein may be subject to export control regulations. Export might require a prior authorization from competent authorities.

Non-automotive qualified products — Unless this data sheet expressly states that this specific Nexperia product is automotive qualified, the product is not suitable for automotive use. It is neither qualified nor tested in accordance with automotive testing or application requirements. Nexperia accepts no liability for inclusion and/or use of non-automotive qualified products in automotive equipment or applications.

In the event that customer uses the product for design-in and use in automotive applications to automotive specifications and standards, customer (a) shall use the product without Nexperia's warranty of the product for such automotive applications, use and specifications, and (b) whenever customer uses the product for automotive applications beyond Nexperia's specifications such use shall be solely at customer's own risk, and (c) customer fully indemnifies Nexperia for any liability, damages or failed product claims resulting from customer design and use of the product for automotive applications beyond Nexperia's standard warranty and Nexperia's product specifications.

Translations — A non-English (translated) version of a document is for reference only. The English version shall prevail in case of any discrepancy between the translated and English versions.

15.4 Trademarks

Notice: All referenced brands, product names, service names and trademarks are the property of their respective owners.

16. Contact information

For more information, please visit: **http://www.nexperia.com**

For sales office addresses, please send an email to: **salesaddresses@nexperia.com**

All information provided in this document is subject to legal disclaimers.

© Nexperia B.V. 2017. All rights reserved

17. Contents

1 General description 1
2 Features and benefits 1
3 Ordering information 2
4 Functional diagram 2
5 Pinning information 4
5.1 Pinning 4
5.2 Pin description 4
6 Functional description 5
7 Limiting values 5
8 Recommended operating conditions 6
9 Static characteristics 6
10 Dynamic characteristics 7
11 AC waveforms 9
12 Package outline 12
13 Abbreviations 16
14 Revision history 16
15 Legal information 17
15.1 Data sheet status 17
15.2 Definitions 17
15.3 Disclaimers 17
15.4 Trademarks 18
16 Contact information 18
17 Contents 19

© Nexperia B.V. 2017. All rights reserved

For more information, please visit: http://www.nexperia.com
For sales office addresses, please send an email to: salesaddresses@nexperia.com
Date of release: 22 November 2012