Line Interrupt Panel Mount Pushbutton Switch

F80 Series

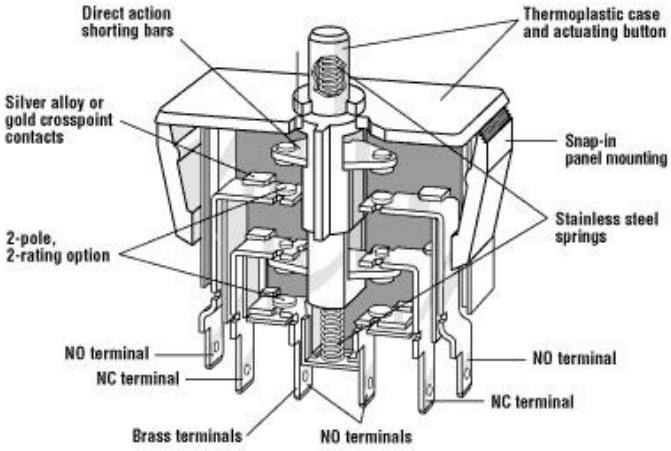

Features

- Snap-in panel mounting
- High overtravel
- Choice of standard housing or button barrier
- 3 terminal types
- Double make/break shorting bars
- Agency approved extended life available
- International approval standard
- 3mm (0.12”) minimum contact gap

Electrical Ratings and Operating Life				
Switch Series	According to EN61058		According to UL1054	
	Nominal Load	Operation cycles	Nominal Load	Operation cycles
F81	10(3)A, 400 VAC	50,000	10A, 125/250 VAC, 3/4HP 125 VAC 1 ½ HP 250 VAC; 6A 30VDC	6000*
F82	16(6)A, 250 VAC	50,000	16A, 125/250 VAC, ¾ HP 125VAC 1 ½ HP 250VAC; 6A 30VDC	6000*
F83	0.1(0.05)A, 250 VAC	50,000	0.1A, 125/250 VAC	6000*
F84	Mixed ratings Consult factory	50,000	Mixed ratings. Consult factory.	6000*

* Indicates 100K UL approved life available

Technical Specifications		Material Specifications	
Temperature Rating:	-25°C to +85°C	Case:	Thermoplastic Polyester
		Actuator button:	Thermoplastic Polyester
Flammability Rating:	UL94V-0	Terminals:	Brass
		Moving Blade:	Brass
		Springs:	Stainless Steel
		Contacts:	F81/F82: Silver Alloy F83: Gold Crosspoint F84: Silver Alloy/Gold Crosspoint
UL File Number:	E23301		

RoHS Compliant

Specifications subject to change without notice

Line Interrupt Panel Mount Pushbutton Switch

F80 Series

Case Styles

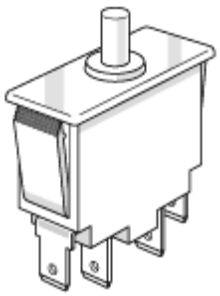

Basic Case Housing

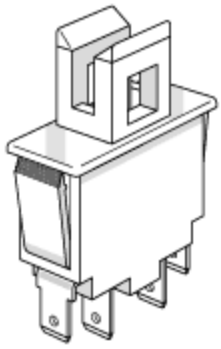

Button Barrier Housing

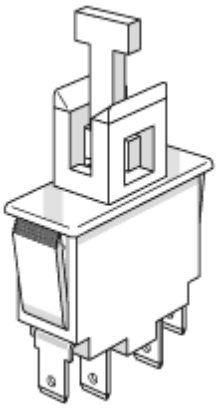

Button Barrier shown with 'Cheat' tool

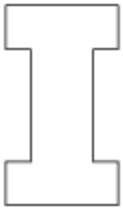

Part Numbers
White: 0014-4945
Red: 0014-5451

'Cheat' tool

Dimensions inches(mm)

BASIC CASE HOUSING (F81J-A110 shown)

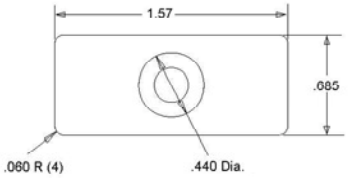

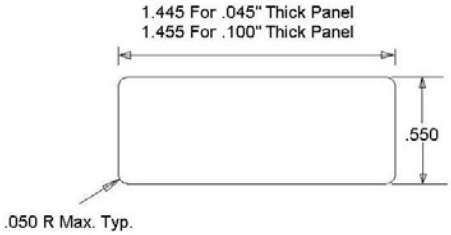

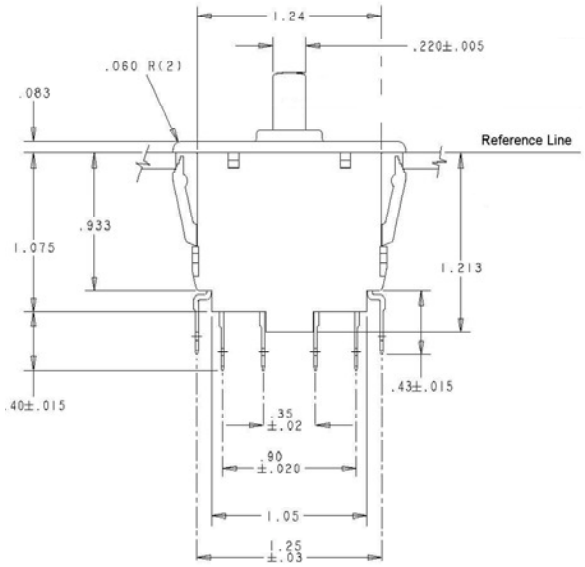

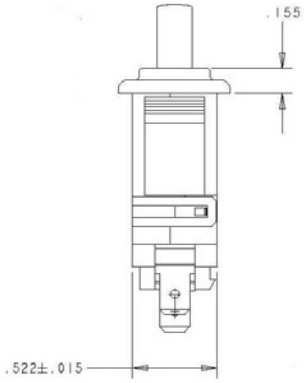

BUTTON BARRIER HOUSING (F81J-B110 shown)

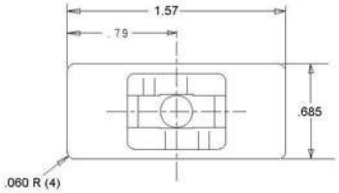

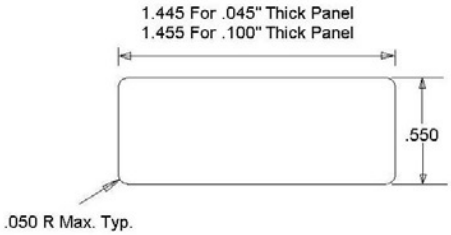

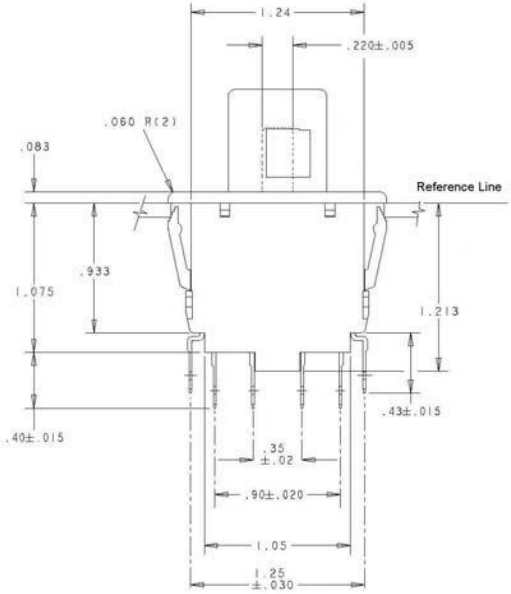

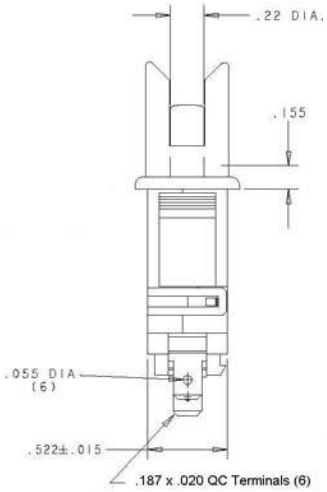

Ordering Information

F8 — Series/ Prefix

2

Code	EN 61058 Rating	UL1054 Rating
1	10(3)A 400 VAC	10A 125/250 VAC; 3/4 HP 125VAC 1.5HP 250 VAC, 6A@ 30VDC
2	16(6)A 250VAC	16A 125/250 VAC; 3/4HP 125VAC; 1.5HP 250VAC, 6A@ 30VDC
3	0.1(0.05)A 250 VAC	0.1A 125/250 VAC
4*	Mixed Ratings	

* Special order. Contact factory for part number

A

Code	Pole	Contact Configuration	
A	1 & 3 2	SPST NO DM Vacant	
J	1 2 3	SPST NO DM SPDT NC DM SPDT NO DM	
X	1 & 2 3	Vacant SPST NC DM	
Y	1 & 3 2	Vacant SPST NC DB	
Z	1 2 3	Vacant SPDT NC DB SPDT NO DM	
V	1 2 & 3	SPST NO DM Vacant	

*DB= Double break
*DM= Double make

B

Code	Case
A	Basic
B	Actuator Barrier

1

Code	Type
1	Standard

20**

Code	Terminal Type inches (mm)
10	0.187 x 0.020 (4.75 x 0.51) QC
20	0.250 x 0.032 (6.35 x 0.81) QC
40	0.187 x 0.032 (4.75 x 0.81) QC

** To order 100,000 cycle UL approved switch, make last digit of part number an 'L'. For instance part number would be F82A-B12L

Specifications subject to change without notice

Specifications

Switch Part Number	Maximum Operate Force (g)	Maximum Pre-Travel inches(mm)	Operating Point inches (mm)	Minimum Overtravel inches (mm)	Full Overtravel Position inches(mm)	Max. Rest Position* inches(mm)
F81A-A120	866	0.236 (5.99)	0.354 +/- 0.039 (8.99 +/- 0.99)	0.079 (2.01)	0.305 (7.75)	0.551 (14.00)
F82A-A120	866	0.236 (5.99)	0.354 +/- 0.039 (8.99 +/- 0.99)	0.079 (2.01)	0.305 (7.75)	0.551 (14.00)
F81X-A120	866	0.236 (5.99)	0.354 +/- 0.039 (8.99 +/- 0.99)	0.079 (2.01)	0.305 (7.75)	0.551 (14.00)
F82X-A120	866	0.236 (5.99)	0.354 +/- 0.039 (8.99 +/- 0.99)	0.079 (2.01)	0.305 (7.75)	0.551 (14.00)

Note: Characteristics taken above reference line

Specifications subject to change without notice

Contact

Call, fax or visit our
Website for more information.

ZF Electronics Corporation
11200 88th Avenue
Pleasant Prairie, WI 53158

Phone: 262.942.6500
Web: www.switches-sensors.zf.com
Email: switches-sensors@zf.com
Fax: 262.942.6566

The manufacturer accepts no liability for errors or non-availability, and reserves the right to change specifications without prior notice.

Technical data relates to product specifications only. Features may differ from those described. Only drawings combined with product specifications shall be deemed binding.

© 2007 ZF Electronics Corporation

Last Updated: 070611