THIS COPY IS PROVIDED ON A RESTRICTED BASIS AND IS NOT TO BE USED IN ANY WAY DETRIMENTAL TO THE INTERESTS OF PANDUIT CORP.

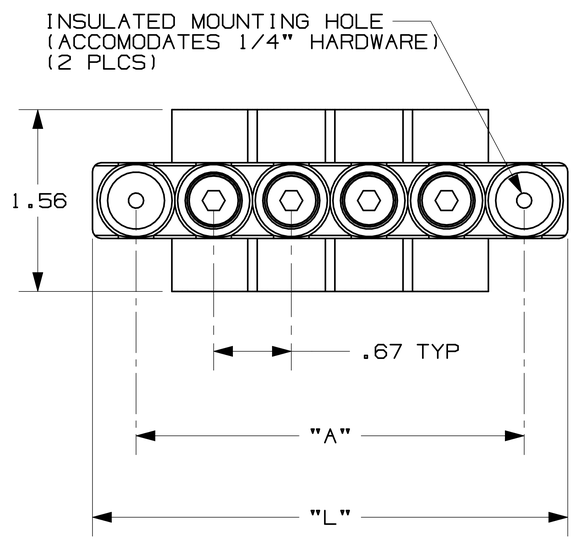

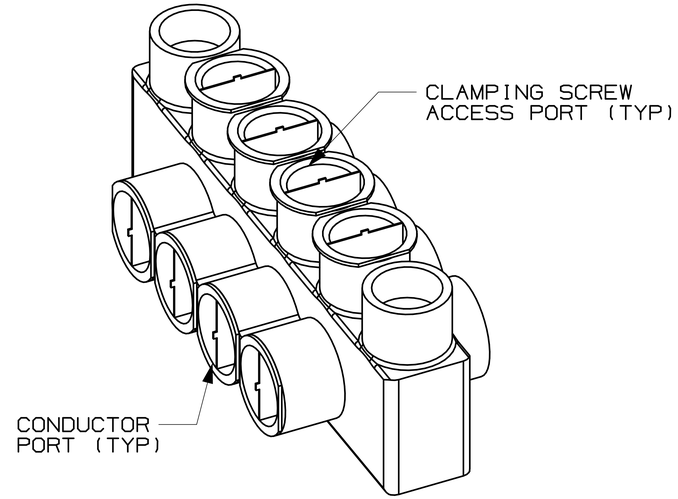

NOTES:

1. UL LISTED AND CSA CERTIFIED. DUAL RATED CU9AL FOR ALUMINUM OR COPPER CONDUCTORS. MEETS OR EXCEEDS ANSI C119.4
2. WIRE RANGE: 2/0 - #14 AWG ONLY ONE CONDUCTOR PER PORT ALLOWED.
3. STRIP LENGTH: .63 +.06/-0
4. HEX KEY SIZE: 3/16", TIGHTENING TORQUE 120 IN-LB.
5. VOLTAGE RATING: 600 V. MAX.
6. TEMPERATURE RATING: 90° C.
7. CONNECTOR BLOCK BODY IS MADE FROM ALUMINUM. CLAMPING SCREWS ARE TIN PLATED. PORTS IN CONNECTOR BLOCK ARE PREFILLED WITH AN OXIDE INHIBITING COMPOUND.
8. INSULATION MATERIAL IS CLEAR PVC.
9. CLAMPING SCREW ACCESS PORTS AND ALL CONDUCTOR ENTRY PORTS ARE PROVIDED WITH REMOVABLE PLASTIC CLOSURE PLUGS.
10. ALL DIMENSIONS SHOWN ARE NOMINAL.
11. PACKAGE QTY: -3 = 3 PCS
    -2 = 2 PCS
    -1 = 1 PCS
12. THIS PART IS ROHS COMPLIANT.

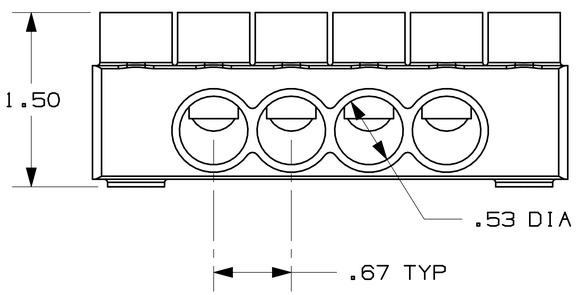

PART NUMBER	# CONDUCTOR PORTS	DIM "L"	DIM "A"
PCSBMT2/0-4-3Y	4	4.20	3.00
PCSBMT2/0-6-2Y	6	5.55	4.70
PCSBMT2/0-8-2Y	8	6.89	6.05
PCSBMT2/0-10-2Y	10	8.24	7.39
PCSBMT2/0-12-1Y	12	9.58	8.74

REV	DATE	BY	CHK	DESCRIPTION	ECN #	CUST	PM
00	3/06	JHNU	LEM	DRAWING RELEASED - ROHS COMPLIANT	PC00353		

C41532_00

PANDUIT CORP. TINLEY PARK, ILLINOIS

MULTI-TAP INSULATED CONNECTORS
WITH MOUNTING HOLES
PCSBMT 2/0 DOUBLE SIDED SERIES

DRAWN BY	CHK'D	SCALE	DRAWING NO.
JHNU		N/A	C41532