THIS DRAWING IS UNPUBLISHED. RELEASED FOR PUBLICATION -,- .
© COPYRIGHT - BY TYCO ELECTRONICS CORPORATION. ALL RIGHTS RESERVED.

LOC	DIST
AJ	16

REVISIONS

P	LTR	DESCRIPTION	DATE	DWN	APVD
	AJ2	REVISED PER ECO-10-008433	24MAY10	HMR	KW

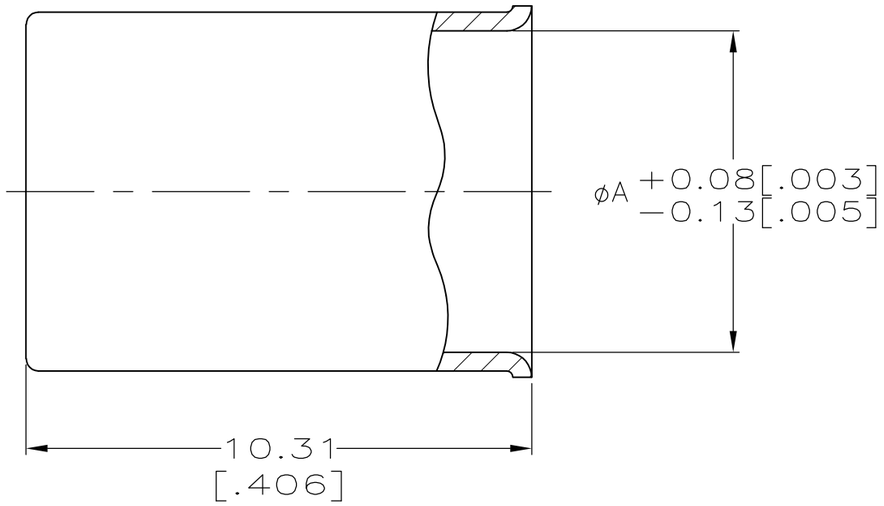

1. COPPER ALLOY

2. TIN-LEAD PLATE PER ASTM-B-545, 2.54 µm [.000100] MIN THICKNESS, WITH SUPPLEMENTAL ANTI FRETTING LUBRICANT.

3. SILVER PLATE PER QQ-S-365, 5.08 µm [.000200] MIN THICKNESS

4. SEE SEPARATE RESTRICTED CUSTOMER DRAWING FOR THIS PART NUMBER

5. MATTE TIN PLATE 2.54 µm [.000100] MINIMUM THICKNESS, WITH SUPPLEMENTAL ANTI FRETTING LUBRICANT

6. BRIGHT TIN PLATE 2.54 µm [.000100] MINIMUM THICKNESS, WITH SUPPLEMENTAL ANTI FRETTING LUBRICANT

	ØA	FINISH	PART NUMBER
	6.55 [.258]	3	9-50428-4
	6.35 [.250]	6	9-50428-3
	6.55 [.258]	6	9-50428-2
	6.35 [.250]	5	9-50428-1
	6.55 [.258]	5	9-50428-0
4 OBSOLETE	–	–	50428-9
OBSOLETE	6.35 [.250]	3	50428-8
	6.35 [.250]	2	50428-6
	6.55 [.258]	2	50428-2
	6.55 [.258]	3	50428-1

THIS DRAWING IS A CONTROLLED DOCUMENT.

DIMENSIONS: mm [INCHES]

TOLERANCES UNLESS OTHERWISE SPECIFIED:

0 PLC	± –
1 PLC	± –
2 PLC	± 0.38[.015]
3 PLC	± –
4 PLC	± –
ANGLES	± –

MATERIAL: SEE NOTE 1

FINISH: SEE TABLE

DWN M.E. COWHER 2-17-92
CHK J.T. LIPPERT 2-25-92
APVD M. PHILLIPS 2-25-92
PRODUCT SPEC —
APPLICATION SPEC —
WEIGHT —

Tyco Electronics
Tyco Electronics Corporation
Harrisburg, PA 17105-3608

NAME: FERRULE, HEAVY WALL

SIZE	CAGE CODE	DRAWING NO	RESTRICTED TO
A3	00779	C-50428	—

CUSTOMER DRAWING

SCALE 8:1 SHEET 1 OF 1 REV AJ2