REV.	ECN NO.	DATE	SIGN	DESCRIPTION
A	Initial Release	2009/04/15	Doreen	Change REV.02 to REV.A

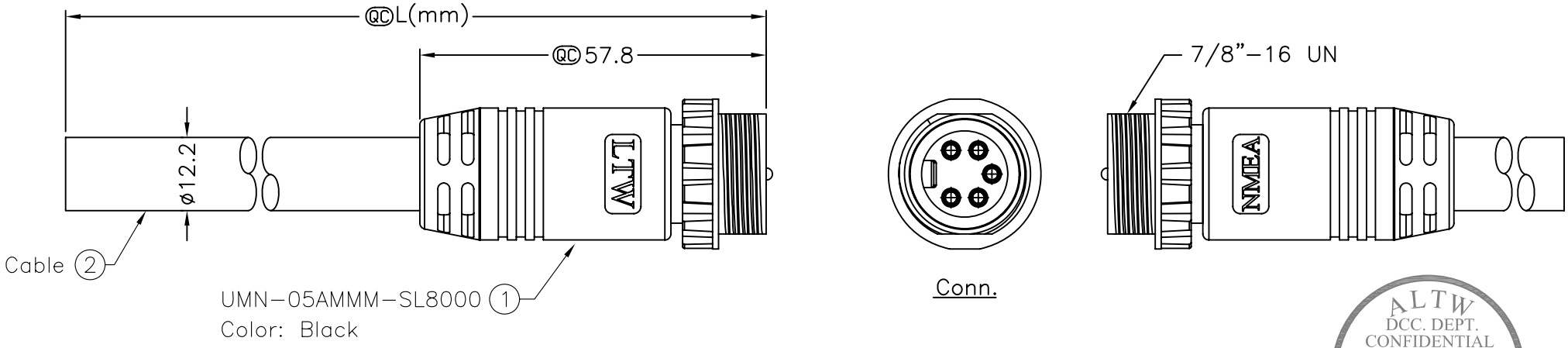

ALTW DCC. DEPT. CONFIDENTIAL 2009.05.04 ISSUED

ALTW CONFIDENTIAL 2009.04.15 R&D DEPT.

UMN-05AFFM-SL8CXX

XX:01~99Meters
01:01Meter
02:02Meters
:
:
99:99Meters
Cable Length(L):01~99Meters

Note:
* QC Important Dimension.
* Waterproof Rate: IP68
* Connector: Black, PU
* Nut: ZN-ZDC-3, Nickel Plated
* Male Pin: Copper Alloy,Gold Plated
* Cable: (18#+1P+AC)+(15#+1P+AC) +Drain+AL.Mylar+Braid OD=12.2mm
* Cable Length Tolerance: 01M:±40mm
  02M~05M:±60mm
  06M~10M:±100mm
  11M~30M:±200mm
  31M~99M:±500mm

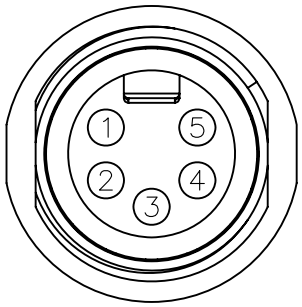

Pin Assignments
Front View

Pin Out	
Wire Color	Conn
Drain	1
Red 紅	2
Black 黑	3
White 白	4
Blue 藍	5

UNIT:mm	TITLE: NMEA Mini M Conn M Pin For Cable	Amphenol LTW 安費諾亮泰企業股份有限公司	ITEM NO	DRAWN BY: Doreen	DATE: 2009/04/17
TOLERANCE: ±0.5 mm	SCALE: Free / SHEET: 1 OF 1		DWG NO: UMN-05AMMM-SL8CXX	CHECKED BY: Kathy	DATE: 2009/04/17
	REV.: A / SIZE: A4 / QC :Inspection Item		CUSTOMER: ALTW	APPROVED BY: Yitung	DATE: 2009/04/27

THIS DOCUMENT IS SUBJECT TO CHANGE WITHOUT NOTICE. IT IS CONFIDENTIAL AND A PROPERTY OF Amphenol LTW. DISCLOSURE TO THIRD PARTY HAS TO BE AUTHORIZED BY Amphenol LTW.