THIS DRAWING IS UNPUBLISHED. RELEASED FOR PUBLICATION –,– .
© COPYRIGHT – By – ALL RIGHTS RESERVED.

REVISIONS

P	LTR	DESCRIPTION	DATE	DWN	APVD
	A	NEW DRAWING PER ECO-12-018480	08NOV12	KH	MZ
	B	REVISED PER ECO-16-006378	03NOV2016	RS	MZ

1 THIS PART WILL ACCEPT NINE (9) MULTIMATE PIN CONTACTS.

2 HOUSING AND PRESSURE PLATE: NYLON, BLACK.
PERIPHERAL SEAL: ELASTOMER, GRAY.
WIRE ENTRY SEAL: ELASTOMER, RED-IRON OXIDE.

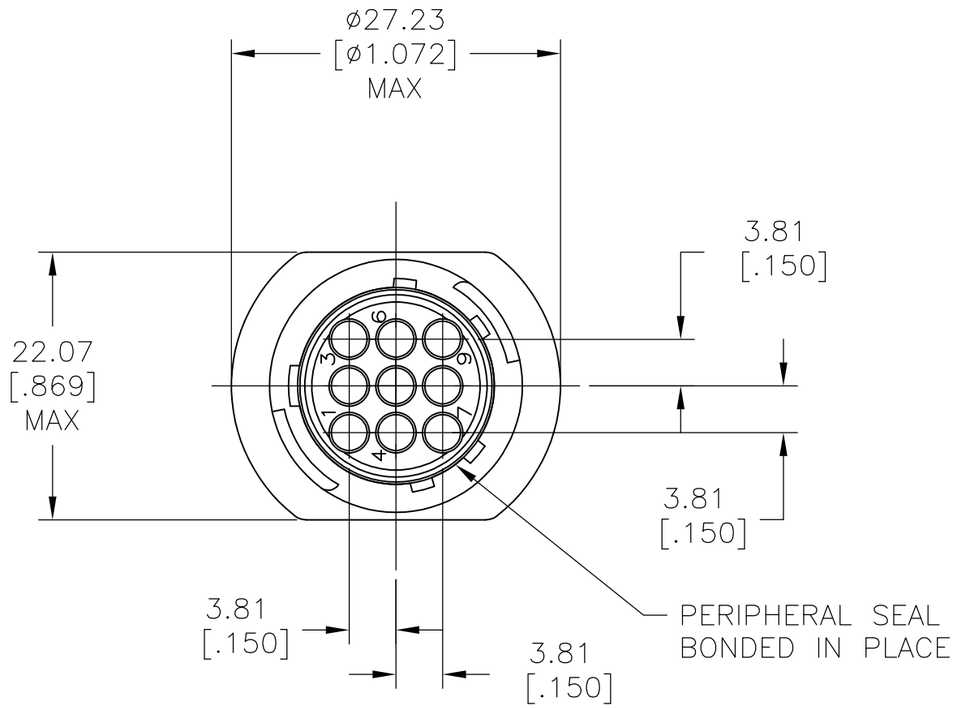

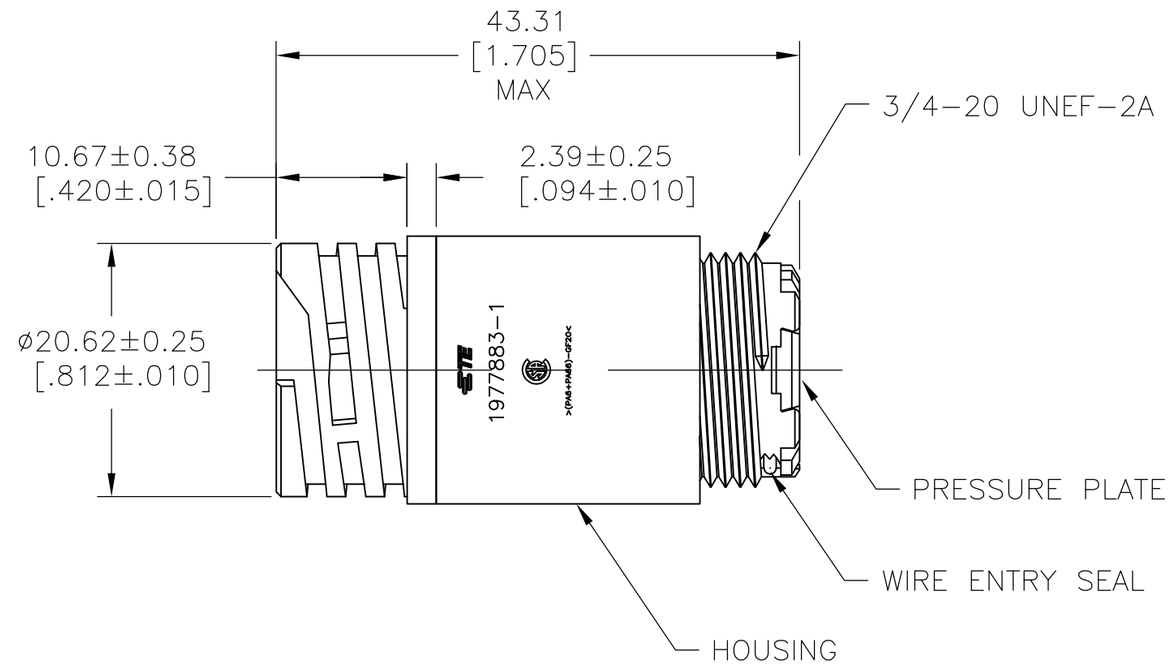

.065–.100	STANDARD	1977883–1
WIRE INSULATION DIAMETER RANGE	INSULATION	PART NUMBER

THIS DRAWING IS A CONTROLLED DOCUMENT.

DIMENSIONS: mm [INCHES]

TOLERANCES UNLESS OTHERWISE SPECIFIED:
0 PLC ± –
1 PLC ± –
2 PLC ± 0.13 [.005]
3 PLC ± –
4 PLC ± –
ANGLES ± –

MATERIAL 2

FINISH –

DWN KIRAN HOLAL 08NOV12
CHK M ZITTO 08NOV12
APVD M ZITTO 08NOV12
PRODUCT SPEC —
APPLICATION SPEC —
WEIGHT

TE Connectivity

NAME CPC FREE HANGING RECEPTACLE ASSEMBLY SERIES 1, SEALED, 13–9, STANDARD SEX, UV RESISTANT

SIZE	CAGE CODE	DRAWING NO	RESTRICTED TO
A3	00779	C-1977883	—

CUSTOMER DRAWING | SCALE 2:1 | SHEET 1 OF 1 | REV B