THIS DRAWING IS UNPUBLISHED. RELEASED FOR PUBLICATION - ,N/A .
© COPYRIGHT N/A By -2123 ALL RIGHTS RESERVED.

LOC	DIST
DF	A0

REVISIONS

P	LTR	DESCRIPTION	DATE	DWN	APVD
	A	REVISED PER ECO-13-002047	05FEB2013	MGM	CT

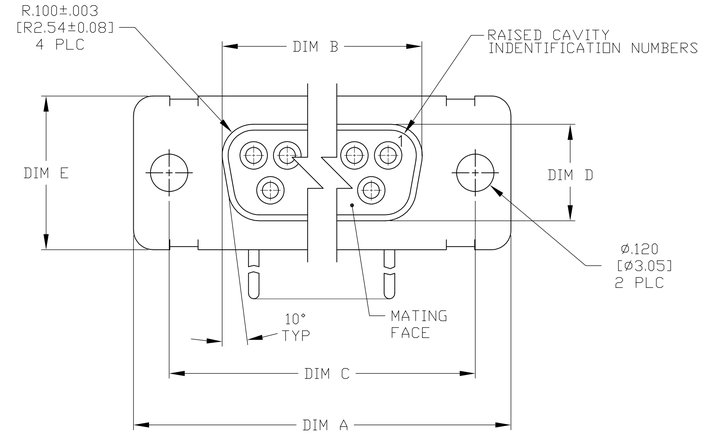

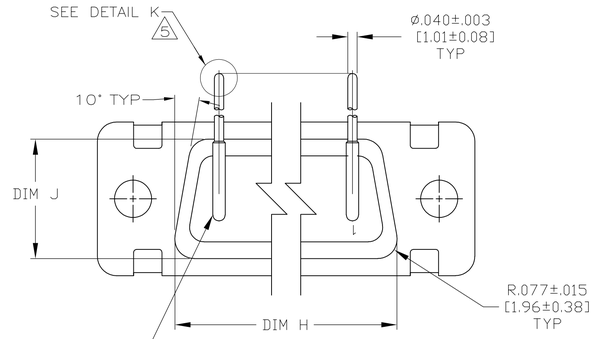

VIEW Z-Z
SHOWN WITH BRACKET
REMOVED FOR CLARITY

CONTACT (QTY = NO. OF POSN)
MATL: BRASS PER ASTM-B-16, OR BERYLLIUM
COPPER PER ASTM-B-194
FINISH: GOLD PER ASTM-B-488, TYPE II,
GRADE C, CLASS 1.27 IN CONTACT MATING AREA,
.000010 [0.0003] MIN THK GOLD PER ASTM-B-488
OVER .000050 [0.0013] MIN THK NICKEL
PER SAE-AMS-QQ-N-290 ON CONTACT BODY

1. SEE SHEET 2 FOR RECOMMENDED P.C. BOARD LAYOUT. TRUE POSITION TOLERANCE FOR P.C.BOARD LAYOUT IS .010 [0.25] AT MAX MATERIAL CONDITION. SUGGESTED BOARD THICKNESS IS .062 [1.57]
2. THE CONNECTORS DESCRIBED IN THIS DOCUMENT MEET THE REQUIREMENTS OF MIL-C-24308 AND MATE WITH ANY PLUG CONNECTOR WITH SAME INSERT ARRANGEMENT.
3. MARKED WITH .047 [1.19]-.062 [1.57] HIGH CHARACTERS. FAR SIDE REFERS TO THE WIDE SIDE OF THE KEYSTONE. NEAR SIDE REFERS TO THE NARROW SIDE OF THE KEYSTONE. IF THE REAR SHELL IS TOO SMALL FOR THE ENTIRE MILITARY PART NUMBER, MARKING SHALL BE LOCATED AS FOLLOWS:
   A. "M24308" ON FRONT SHELL, FAR SIDE.
   B. SLASH SHEET AND DASH NUMBER ON REAR SHELL, FAR SIDE.
   C. "TYCO" AND DATE CODE ON FRONT SHELL, NEAR SIDE.
   D. TYCO PART NUMBER ON REAR SHELL, NEAR SIDE.

   IF THE FRONT SHELL IS TOO SMALL FOR "TYCO", TYCO PART NUMBER AND DATE CODE, MARKING SHALL BE SPLIT AS FOLLOWS:
   A. TYCO PART NUMBER ON REAR SHELL, NEAR SIDE.
   B. "TYCO" AND DATE CODE ON FRONT SHELL, NEAR SIDE.
   C. MILITARY PART NUMBER ON REAR SHELL, FAR SIDE.
4. POINT OF ELECTRICAL ENGAGEMENT - AS MEASURED WITH A .0390-.0393 (0.991-0.998] DIA SQUARE ENDED PIN.
5. SOLDER DIPPED PER J-STD-001 WITH Sn63 SOLDER PER J-STD-006 IN THE ENTIRE AREA OF DIMENSION SHOWN. (1757842-6 THRU -10 ONLY.)
6. MEETS SOLDERABLITY PER MIL-STD-202 METHOD 208.

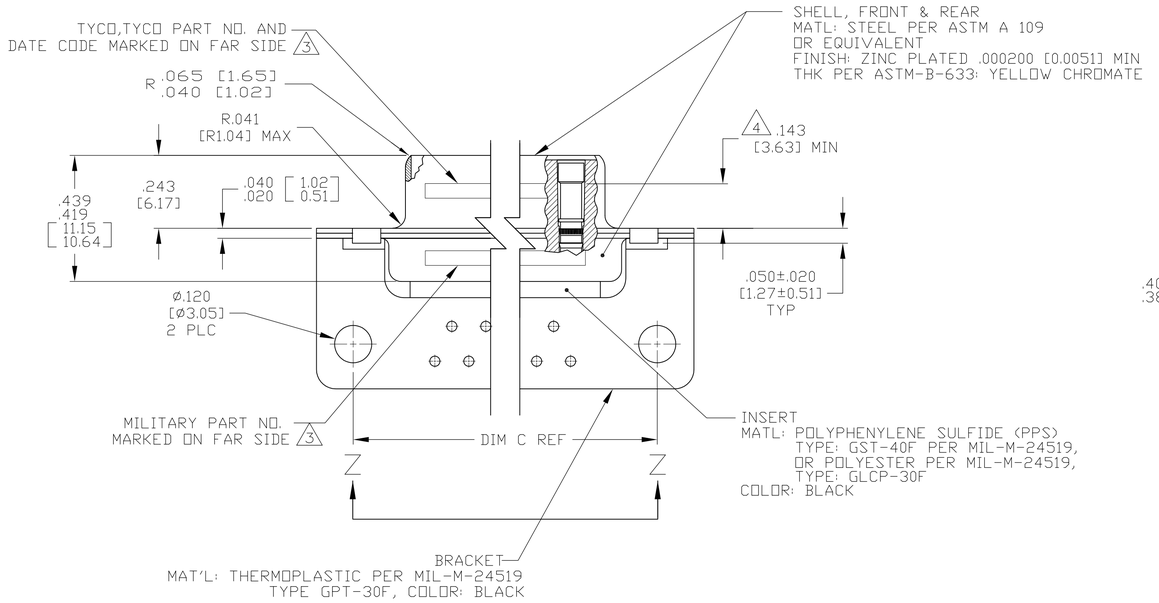

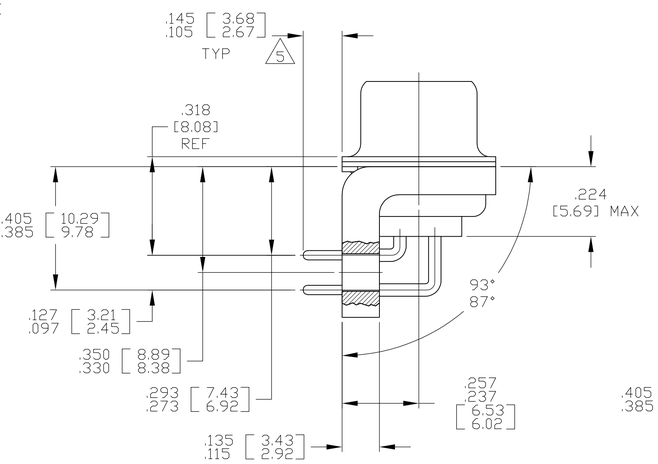

SHELL SIZES 1 THRU 4
CONTACT CONFIGURATION

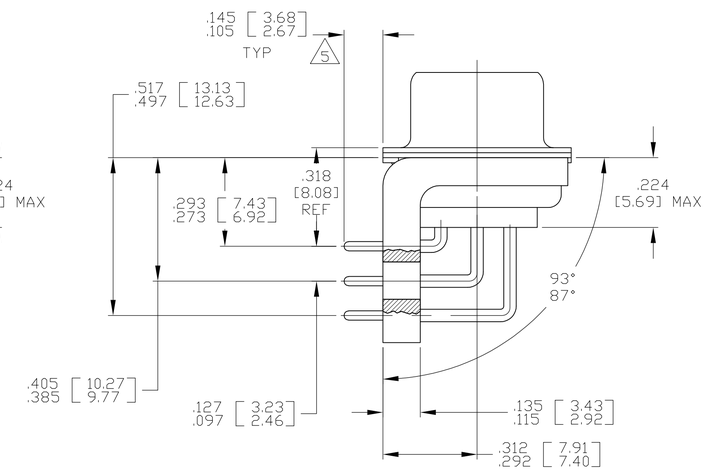

SHELL SIZE 5 CONTACT
CONFIGURATION

DIM J	DIM H	DIM E	DIM D	DIM C	DIM B	DIM A	INSERT ARRANGEMENT	NO OF POS	SHELL SIZE	MILITARY P/N 3 ON CONNECTOR	TYCO P/N MARKED ON CONNECTOR 3	TYCO PART NO.
.544 [13.82] .524 [13.31]	2.188 [55.58] 2.168 [55.07]	.620 [15.75] .590 [14.99]	.428 [10.87] .418 [10.62]	2.411 [61.24] 2.401 [60.99]	2.069 [52.55] 2.059 [52.30]	2.650 [67.31] 2.620 [66.55]	MS18277-1	50	5	M24308/23-41Z	1757842-5	1-1757842-0 6
.432 [10.97] .412 [10.46]	2.282 [57.96] 2.262 [57.45]	.509 [12.93] .479 [12.17]	.316 [8.03] .306 [7.77]	2.505 [63.63] 2.495 [63.37]	2.164 [54.97] 2.154 [54.71]	2.744 [69.70] 2.714 [68.94]	MS18276-1	37	4	M24308/23-40Z	1757842-4	1757842-9 6
.432 [10.97] .412 [10.46]	1.635 [41.53] 1.615 [41.02]	.509 [12.93] .479 [12.17]	.316 [8.03] .306 [7.77]	1.857 [47.17] 1.847 [46.91]	1.516 [38.51] 1.506 [38.25]	2.103 [53.42] 2.073 [52.65]	MS18275-1	25	3	M24308/23-39Z	1757842-3	1757842-8 6
.432 [10.97] .412 [10.46]	1.093 [27.76] 1.073 [27.25]	.509 [12.93] .479 [12.17]	.316 [8.03] .306 [7.77]	1.317 [33.45] 1.307 [33.20]	.976 [24.79] .966 [24.54]	1.556 [39.52] 1.526 [38.76]	MS18274-1	15	2	M24308/23-38Z	1757842-2	1757842-7 6
.432 [10.97] .412 [10.46]	.769 [19.53] .749 [19.02]	.509 [12.93] .479 [12.17]	.316 [8.03] .306 [7.77]	.989 [25.12] .979 [24.87]	.648 [16.46] .638 [16.21]	1.228 [31.19] 1.198 [30.43]	MS18273-1	9	1	M24308/23-37Z	1757842-1	1757842-6 6
.544 [13.82] .524 [13.31]	2.188 [55.58] 2.168 [55.07]	.620 [15.75] .590 [14.99]	.428 [10.87] .418 [10.62]	2.411 [61.24] 2.401 [60.99]	2.069 [52.55] 2.059 [52.30]	2.650 [67.31] 2.620 [66.55]	MS18277-1	50	5	M24308/23-41Z	1757842-5	1757842-5
.432 [10.97] .412 [10.46]	2.282 [57.96] 2.262 [57.45]	.509 [12.93] .479 [12.17]	.316 [8.03] .306 [7.77]	2.505 [63.63] 2.495 [63.37]	2.164 [54.97] 2.154 [54.71]	2.744 [69.70] 2.714 [68.94]	MS18276-1	37	4	M24308/23-40Z	1757842-4	1757842-4
.432 [10.97] .412 [10.46]	1.635 [41.53] 1.615 [41.02]	.509 [12.93] .479 [12.17]	.316 [8.03] .306 [7.77]	1.857 [47.17] 1.847 [46.91]	1.516 [38.51] 1.506 [38.25]	2.103 [53.42] 2.073 [52.65]	MS18275-1	25	3	M24308/23-39Z	1757842-3	1757842-3
.432 [10.97] .412 [10.46]	1.093 [27.76] 1.073 [27.25]	.509 [12.93] .479 [12.17]	.316 [8.03] .306 [7.77]	1.317 [33.45] 1.307 [33.20]	.976 [24.79] .966 [24.54]	1.556 [39.52] 1.526 [38.76]	MS18274-1	15	2	M24308/23-38Z	1757842-2	1757842-2
.432 [10.97] .412 [10.46]	.769 [19.53] .749 [19.02]	.509 [12.93] .479 [12.17]	.316 [8.03] .306 [7.77]	.989 [25.12] .979 [24.87]	.648 [16.46] .638 [16.21]	1.228 [31.19] 1.198 [30.43]	MS18273-1	9	1	M24308/23-37Z	1757842-1	1757842-1

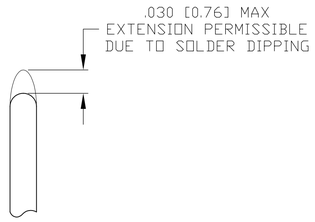

DETAIL K
SCALE 10:1
FOR 1757842-6 THRU -10 ONLY
5

THIS DRAWING IS A CONTROLLED DOCUMENT.

DIMENSIONS: INCHES

TOLERANCES UNLESS OTHERWISE SPECIFIED:
0 PLC ± -
1 PLC ± -
2 PLC ± -
3 PLC ± .005 [0.13]
4 PLC ± -
ANGLES ± 1°

MATERIAL: SEE CALLOUTS
FINISH: SEE CALLOUTS

DWN C.C.THOMAS 3-22-06
CHK D.MILLER 3-27-06
APVD D.MILLER 3-27-06
PRODUCT SPEC —
APPLICATION SPEC —
WEIGHT —

TE Connectivity

NAME: RECEPTACLE ASSEMBLY,AMPLIMITE,RT ANGLE, SERIES 109,SIZE 1 THRU 5

SIZE	CAGE CODE	DRAWING NO	RESTRICTED TO
A1	00779	C-1757842	—

CUSTOMER DRAWING | SCALE 4:1 | SHEET 1 OF 2 | REV A

4805 (3/11)

THIS DRAWING IS UNPUBLISHED. RELEASED FOR PUBLICATION -,- .
© COPYRIGHT - By -2123 ALL RIGHTS RESERVED.

LOC	DIST
DF	DO

REVISIONS

P	LTR	DESCRIPTION	DATE	DWN	APVD
	-	SEE SHEET 1	-	-	-

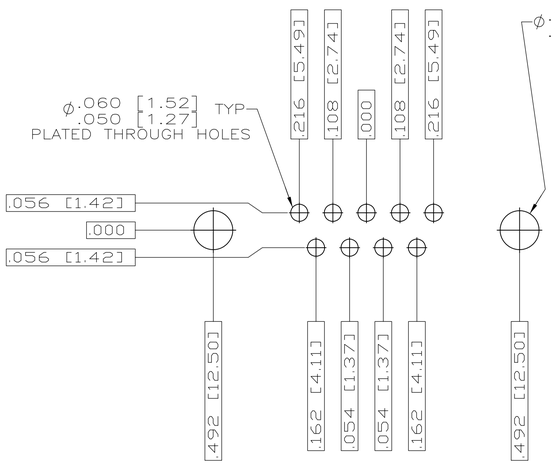

RECOMMENDED P.C. BOARD LAYOUT
SHELL SIZE 1 (9 POSITION) 1

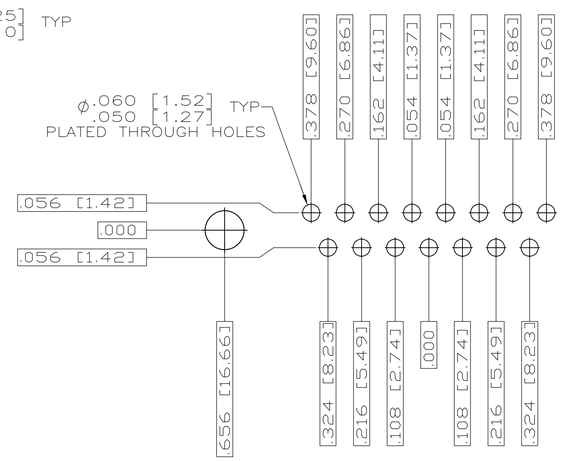

RECOMMENDED P.C. BOARD LAYOUT
SHELL SIZE 2 (15 POSITION) 1

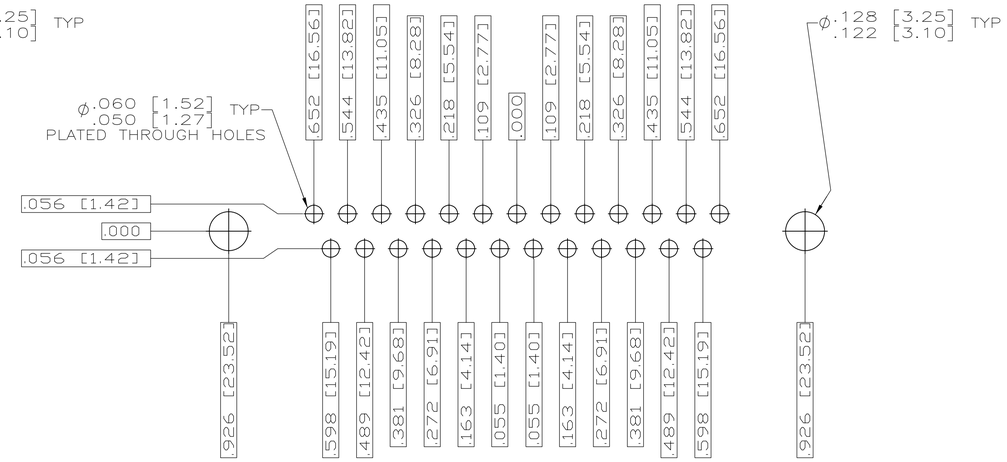

RECOMMENDED P.C. BOARD LAYOUT
SHELL SIZE 3 (25 POSITION) 1

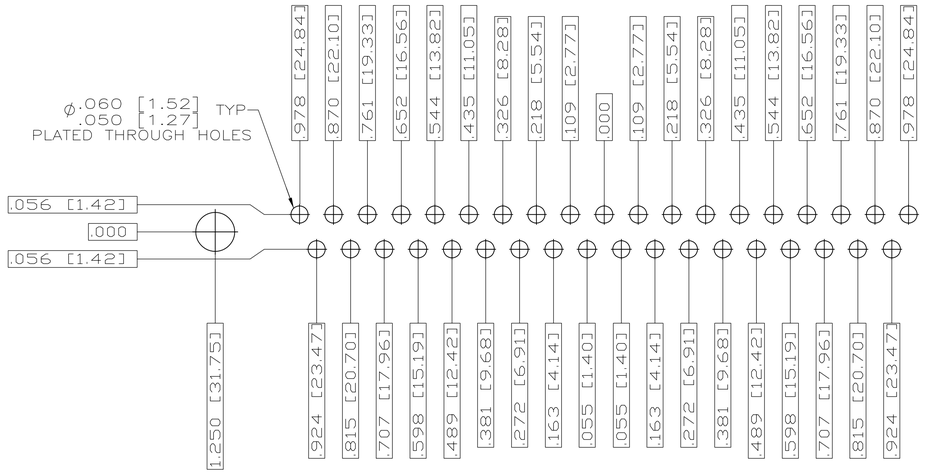

RECOMMENDED P.C. BOARD LAYOUT
SHELL SIZE 4 (37 POSITION) 1

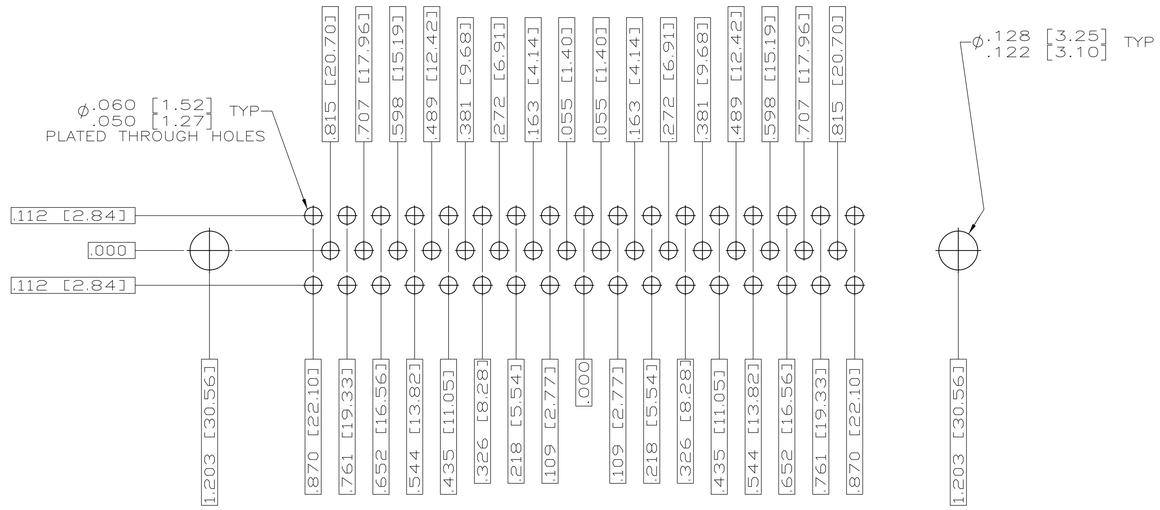

RECOMMENDED P.C. BOARD LAYOUT
SHELL SIZE 5 (50 POSITION) 1

THIS DRAWING IS A CONTROLLED DOCUMENT.

DIMENSIONS: INCHES

TOLERANCES UNLESS OTHERWISE SPECIFIED:
0 PLC ± -
1 PLC ± -
2 PLC ± -
3 PLC ± -
4 PLC ± -
ANGLES ± 1°

MATERIAL: SEE CALLOUTS
FINISH: SEE CALLOUTS

DWN C.C.THOMAS 3-22-06
CHK D.HOFFMAN 3-27-06
APVD D.MILLER 3-27-06
PRODUCT SPEC —
APPLICATION SPEC —
WEIGHT —

TE Connectivity

NAME: RECEPTACLE ASSEMBLY,AMPLIMITE RIGHT ANGLE,SERIES 109,SIZE 1 THRU 5

SIZE	CAGE CODE	DRAWING NO	RESTRICTED TO
A1	00779	C-1757842	—

CUSTOMER DRAWING | SCALE 4:1 | SHEET 2 OF 2 | REV A

4805 (3/11)