PLCC2 SMD Side View Package LED SMS1105UWDN, NEUTRAL WHITE

BIVAR

SMS1105UWDN

- Industry Standard Footprint
- Side Viewing, Low Profile Package
- High Luminous Intensity
- Wide Viewing Angle
- High Power Efficiency

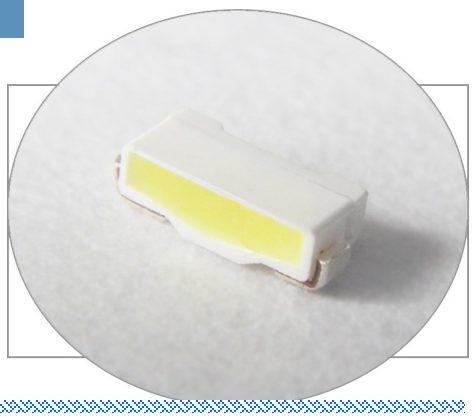

Bivar SMS1105 LED is offered in a side viewing PLCC2 package exhibiting high luminous intensity and wide viewing angles. The miniature package is ideal for small scale applications such as displays, general indication, and backlighting. Low power consumption and excellent long life reliability are suitable for battery powered equipment where minimal maintenance is required. Wide variety of color and intensity combinations are available to meet any illumination needs. Bivar SMS1105 LED is packaged in standard tape and reels for pick and place assemblies.

Part Number	Material	Emitted Color	Lumen Typ. mcd	Lens Color	Viewing Angle
SMS1105UWDN	InGaN	Neutral White	1500	Diffused	120°

Outline Dimensions

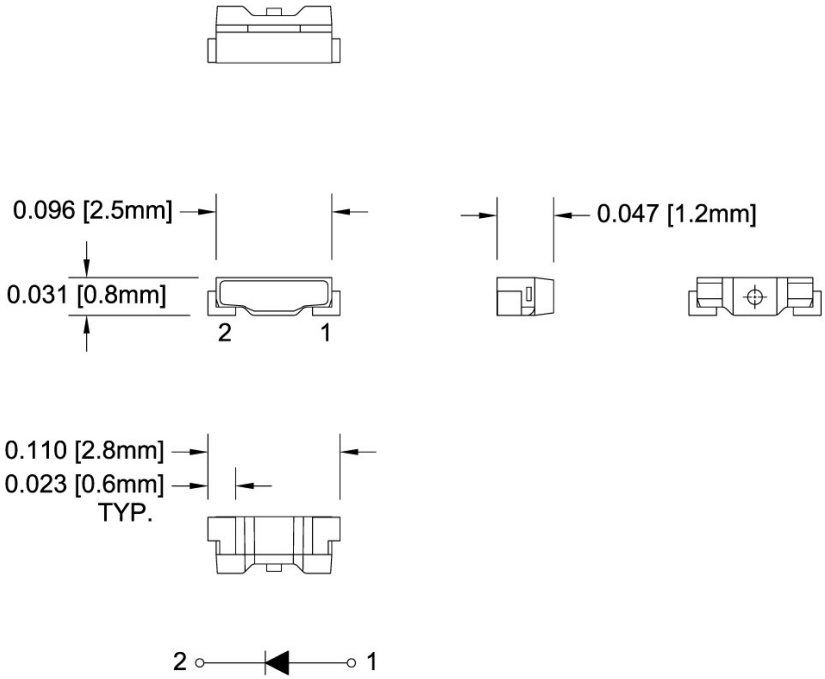

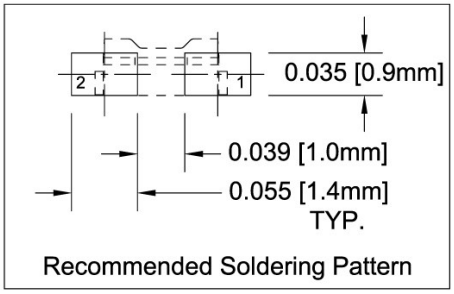

Outline Drawings Notes:
1. All dimensions are in inches [millimeters].
2. Standard tolerance: ±0.010" unless otherwise noted.

ATTENTION OBSERVE PRECAUTIONS FOR HANDLING ELECTROSTATIC SENSITIVE DEVICES

RoHS Compliant

Moisture Sensitivity Levels 4

Bivar reserves the right to make changes at any time without notice.

Absolute Maximum Ratings

T_A = 25°C unless otherwise noted

Power Dissipation	100 mW
Continuous Forward Current	30 mA
Peak Forward Current [1]	100 mA
Electrostatic Discharge Classification (HBM)	2000 V
Reverse Voltage	5 V
Derating Linear From 25°C	0.4 mA/°C
Operating Temperature Range	-30 ~ +85°C
Storage Temperature Range	-40 ~ +90°C
Soldering Temperature	260°C

Notes: 1. 10% Duty Cycle, Pulse Width ≤ 0.1 msec.
2. Solder time less than 5 seconds at temperature extreme.

Electrical Characteristics

T_A = 25°C & I_F = 20 mA unless otherwise noted

Emitting Color	Forward Voltage (V)[1]			Recommend Forward Current (mA)	Reverse Current (μA) V_R=5V	Chromaticity Coordinates (XY)[2]	Luminous Intensity (mcd)[3]		Viewing Angle 2 Θ ½ (deg)
	MIN	TYP	MAX	TYP	MAX	TYP	MIN	MAX	TYP
Neutral White	2.8	3.2	3.5	20	10	X=0.35 , Y=0.35	1200	1800	120

Notes: 1. Tolerance of Forward Voltage : ±0.05V.
2. Tolerance of Chromaticity Coordinates : ±0.02.
3. Tolerance of Luminous Intensity : ±15%.

Directivity Radiation

T_A = 25°C unless otherwise noted

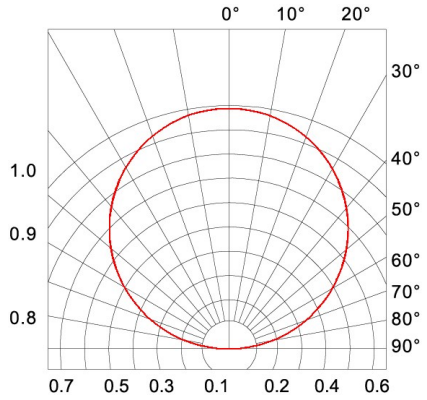

Radiation Diagram

Bivar reserves the right to make changes at any time without notice.

Typical Electrical / Optical Characteristics Curves

T_A = 25°C unless otherwise noted

Relative Spectrum Emission I_{rel} = f (l), T_A = 25°C , I_F = 20 mA
V(l) = Standard eye response curve

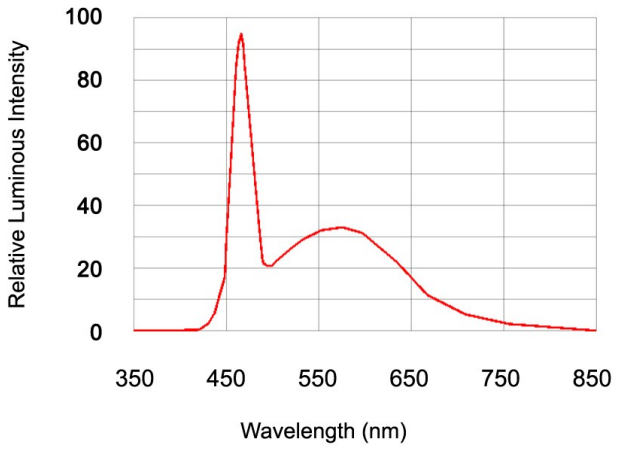

Fig.1 Relative Luminous Intensity vs. Wavelength

Forward Current I_F = f (V_F)
T_A = 25°C

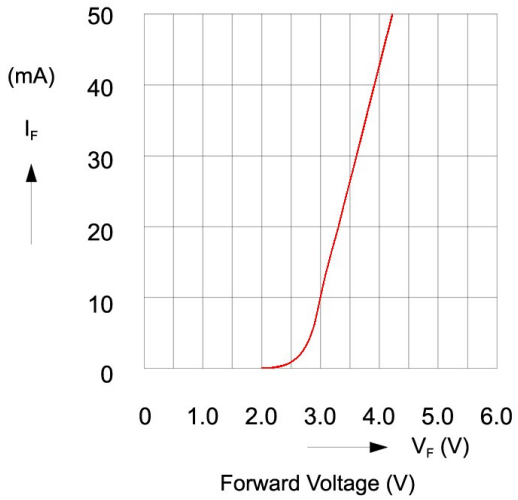

Fig.2 Forward Current vs. Forward Voltage

Relative Luminous Intensity I_V/I_V (20mA) = f (I_F)
T_A = 25°C

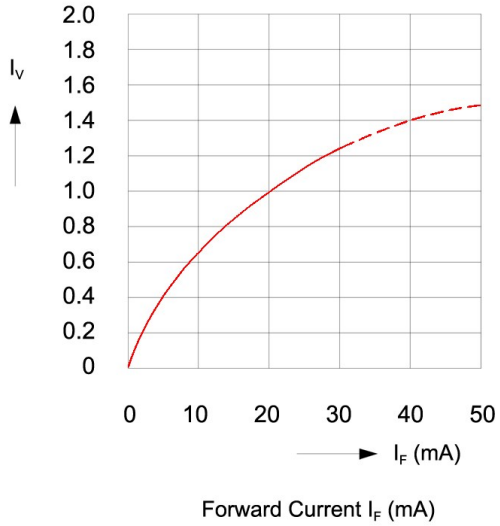

Fig.3 Relative Luminous Intensity vs. Forward Current

Ambient Temperature vs. Allowable Forward Current

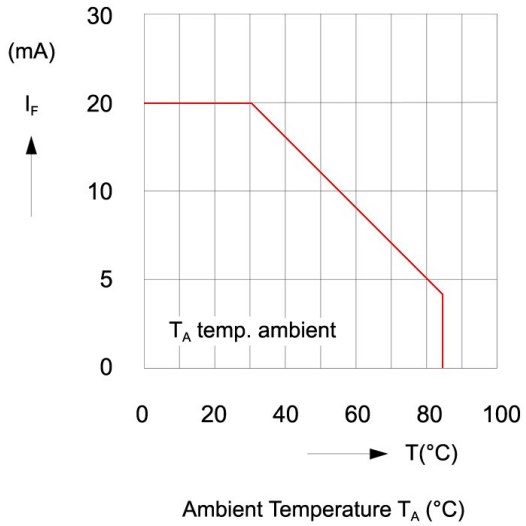

Fig.4 Forward Current vs. Ambient Temperature

Recommended Soldering Conditions

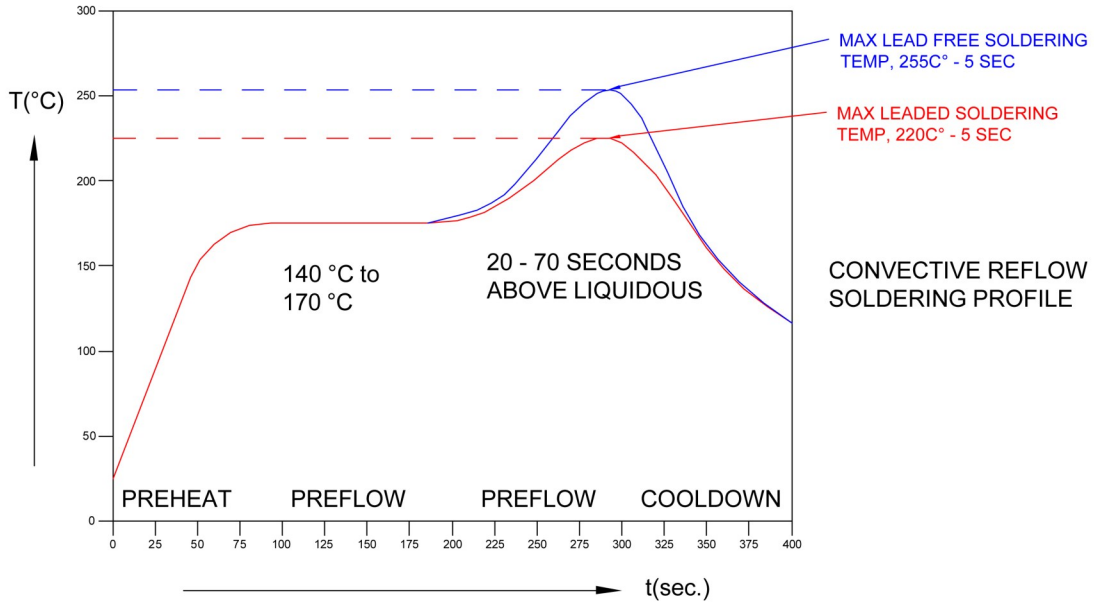

Tape and Reel Dimensions

Note: 3000 pcs/Reel

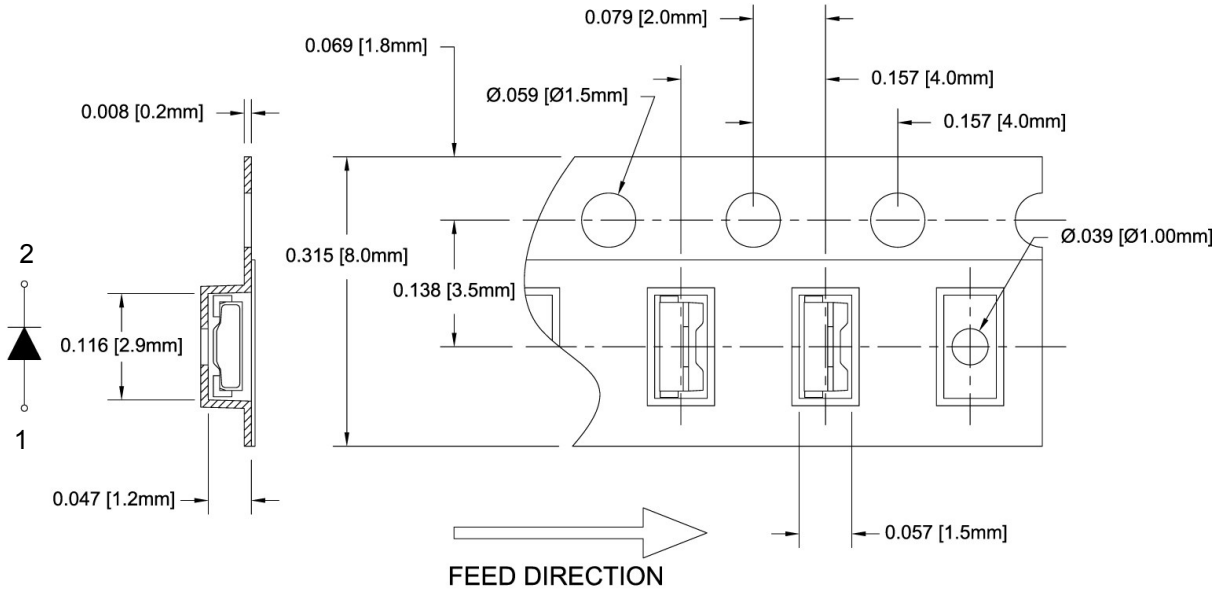

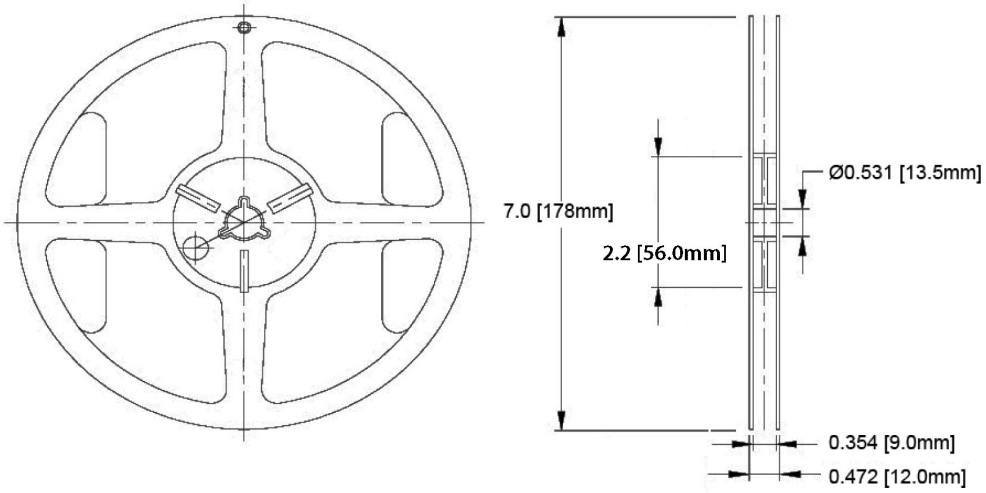

Outline Drawings Notes:
1. All dimensions are in inches [millimeters].
2. Standard tolerance unless otherwise noted: X.XXX ± 0.010"
X.X ± 0.1"

Packaging and Labeling Plan

Note: 1 Reel / Bag

Vacuum and Heat Sealed
Clear AntiStatic Poly Bag

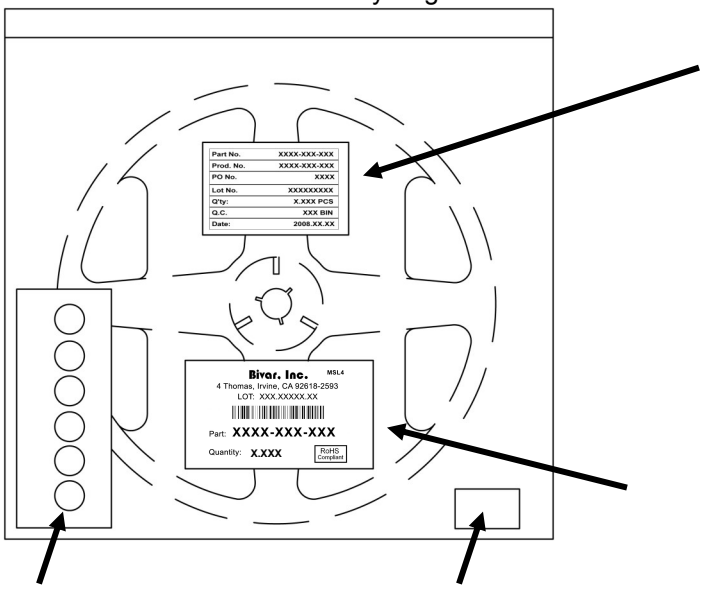

Humidity Indicator Card

Desiccant

Part No.	**XXXX-XXX-XXX**
Prod. No.	**XXXX-XXX-XXX**
PO No.	**XXXX**
Lot No.	**XXXXXXXXX**
Q'ty:	**X.XXX PCS**
Q.C.	**XXX BIN**
Date:	**2008.XX.XX**

Internal Quality Control Label

Bivar, Inc. **MSL4**
4 Thomas, Irvine, CA 92618-2593
LOT: XXX.XXXXX.XX
Part: **XXXX-XXX-XXX**
Quantity: **X.XXX**
RoHS Compliant

Bivar Standard Packaging Label