Alle Rechte vorbehalten/ *All rights reserved*

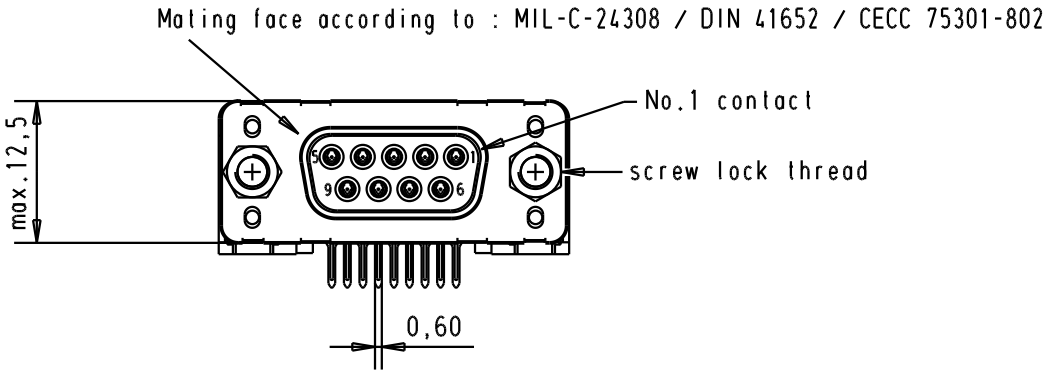

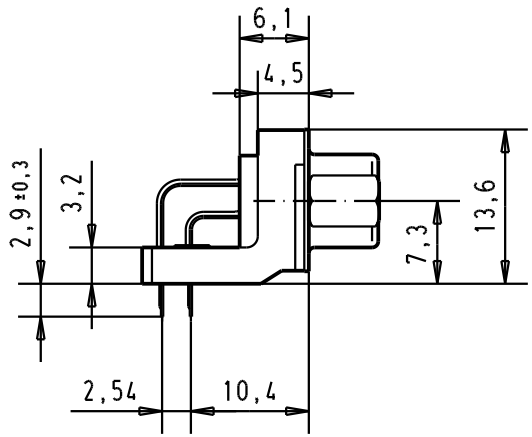

Printed board layout
component side

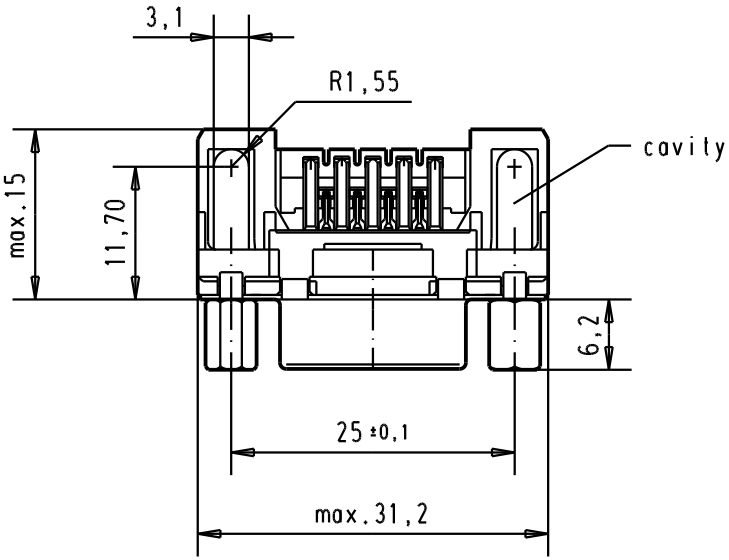

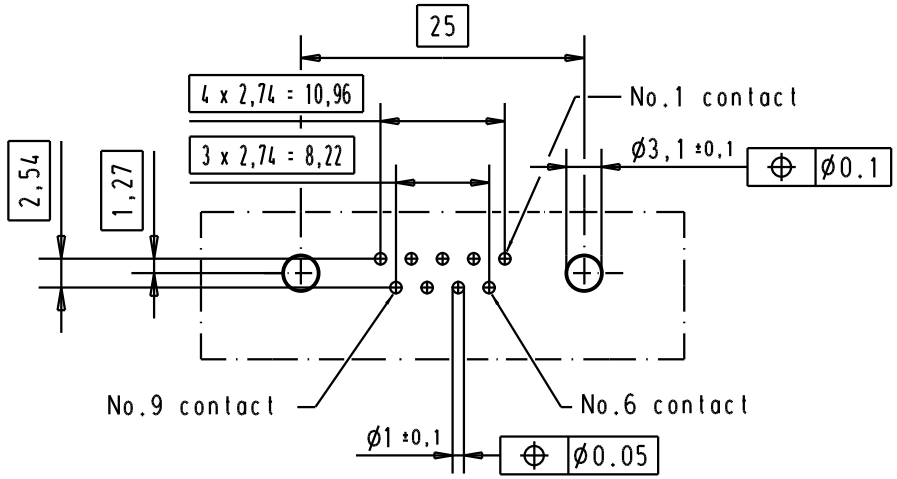

Part number	Screw lock thread	Performance level	Mod.	Dat.	Name
09 66 112 3603	4-40 UNC	1	31892	05/05/04	JH
09 66 112 6603	4-40 UNC	2	29773	18-APR-02	CV
09 66 112 7603	4-40 UNC	3	27960	27/nov/00	ALSPACE

	Dat.	Name
Detail.	27/nov/00	ALSPACE
Insp.		
Stand.		

All Dim. in mm
Orig. Size DIN A 4

D-Sub 09 poles standard angle female, solder pin with screw lock and hole

Maßstab/ *Scale* 1.5:1

HARTING EURL
F-95972 Paris

TB 0966112x60x

Sub.

Blatt/ *Page* 3