Alle Rechte vorbehalten/ *All rights reserved*

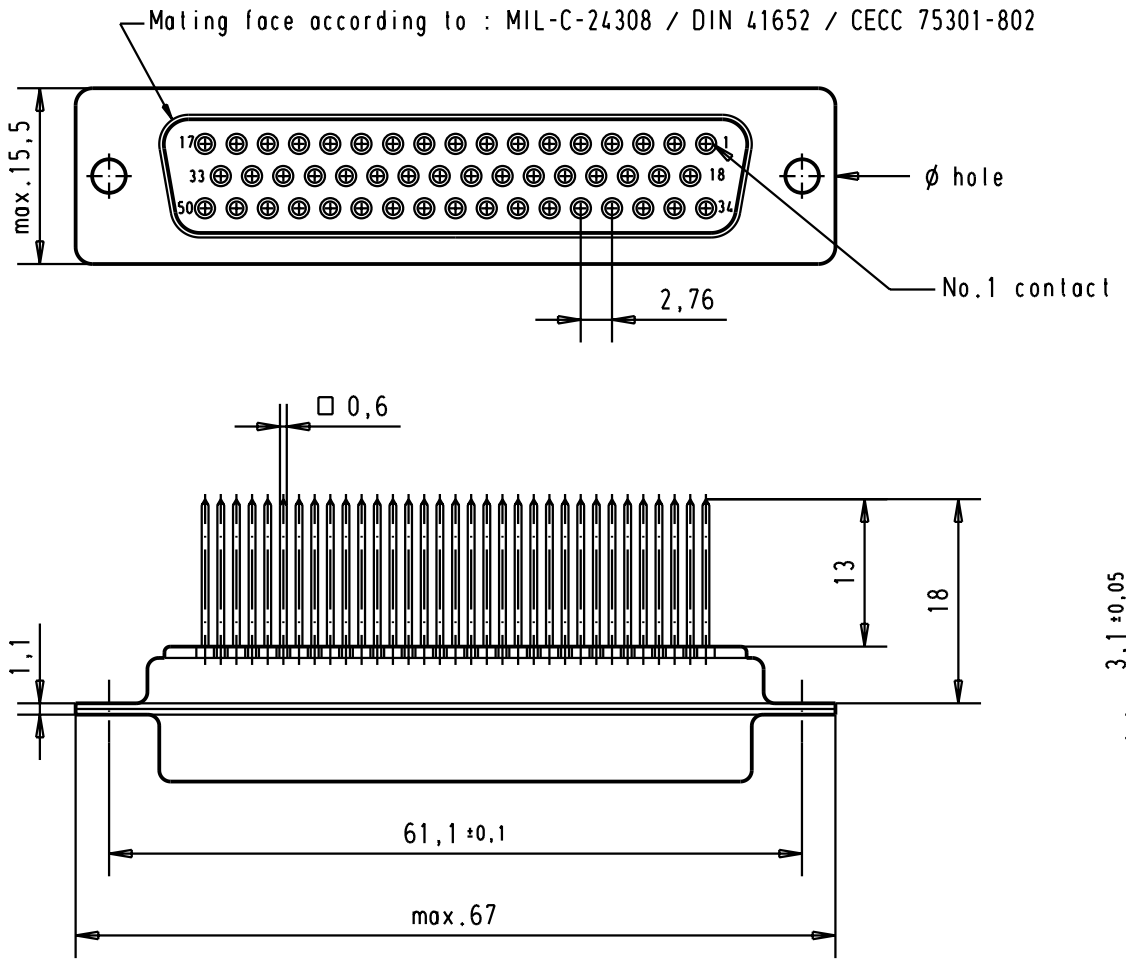

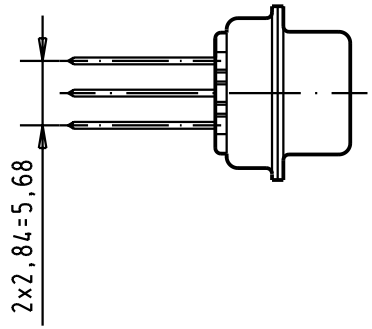

Panel cut out
1:1

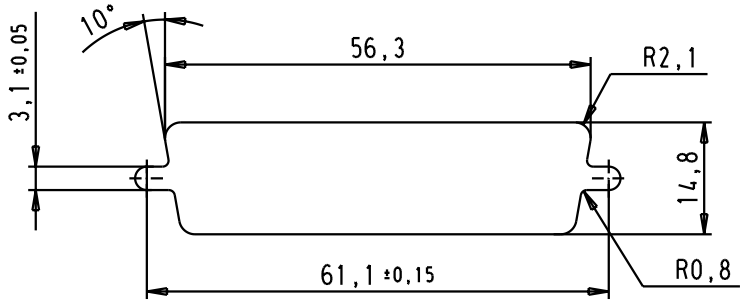

Part number	ø hole	Performance level	Mod.	Dat.	Name
09 67 050 4716	3.1 + 0.1	2			
09 67 050 4707	3.1 + 0.1	3			
			29772	17-APR-02	CV

	Dat.	Name
Detail.	17-APR-02	CV
Insp.		
Stand.		

All Dim. in mm
Orig. Size DIN A 4

D-Sub, Female, 50 Poles
wrap posts

Maßstab/ *Scale* 1,5:1 1:1

HARTING EURL
F-95972 Paris

TB 096705047xx

Sub.

Blatt/ *Page* 2